EV-S900
RMT-424

SERVICE MANUAL

US Model
Canadian Model

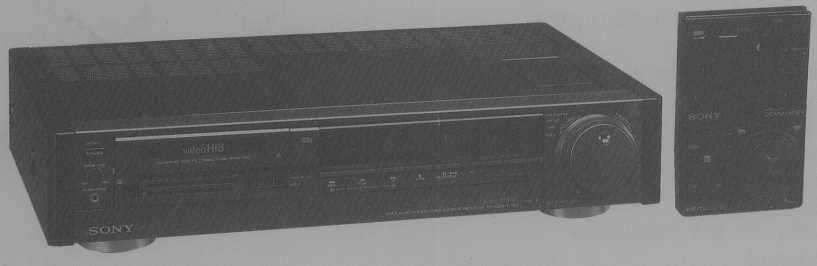

Video8 PRO

SPECIFICATIONS

System

Video recording system
- Rotary two-head helical scanning
- Helical scaning FM system

Audio recording system
- Normal recording
  - Standard: Rotary head FM system (monaural)
  - PCM: PCM system (2 channels)
- Digital multi audio recording
  - PCM system (2 channels, 6 tracks)

Video signal: NTSC color, EIA standards
Usable cassettes: 8 mm video system cassette
Tape speed: SP: Approx. 1.43 cm/sec.
LP: Approx. 0.72 cm/sec.
Maximum recording time
- SP: 2 hours
- LP: 4 hours
- (with Sony E6/P6-120 cassette)

Fast-forward and rewind time
- Approx. 2 min. 30 sec.
- (with Sony E6/P6-120 cassette)

Tuner section

Channel coverage: VHF channels 2 to 13
UHF channels 14 to 69
Cable TV channels 1 to 125
VHF/UHF output signal
- Channel 3 or 4 (selectable)
- 75 ohms, unbalanced

VHF/UHF input signal
- 75-ohm antenna terminal for VHF/UHF

PCM digital multi audio system

Sampling frequency	31.5 kHz
Audio frequency	20 Hz to 15 kHz
Dynamic range	More than 90 dB
Wow and flutter	Less than 0.005% RMS

Inputs and outputs

Video input: LINE IN 1/2 VIDEO (phono jack) (1 each)
- Input signal: 1 Vp-p, 75 ohms, unbalanced, sync negative

S VIDEO input: LINE IN 1 S VIDEO (4-pin, mini-DIN) (1)
- Luminance signal: 1 Vp-p, 75 ohms, unbalanced, sync negative
- Chrominance signal: 0.286 Vp-p, 75 ohms, unbalanced

Audio input: LINE IN 1/2 AUDIO (phono jack) (2 each)
- Input level: −7.5 dBs (0 dBs = 0.775 Vrms)
- Input impedance: more than 47 kilohms

Video output: LINE OUT 1/2 VIDEO (phono jack) (1 each)
- Output signal: 1 Vp-p, 75 ohms, unbalanced, sync negative

— Continued on next page —

Hi8 STEREO VIDEO CASSETTE RECORDER

SONY®

MICROFILM

S VIDEO output	LINE OUT 1 S VIDEO (4-pin, mini-DIN) (1) Luminance signal: 1 Vp-p, 75 ohms, unbalanced, sync negative Chrominance signal: 0.286 Vp-p, 75 ohms, unbalanced
Audio output	LINE OUT 1/2 AUDIO (phono jack) (2 each) Standard impedance: −7.5 dBs (327 mV) at load impedance 47 kilohms Output impedance: less than 10 kilohms
CONTROL L	5-pin DIN
CONTROL S IN	Minijack
CONTROL S OUT	Minijack
MIC input	Minijack (2) −60 dBs, for low impedance microphone
HEADPHONES jack	Stereo minijack, −20 dBs, 8 ohms

Timer

Clock	Crystal lock
Time indication	12-hour cycle
Timer setting	Only for recording 6 events (3 weeks max. adjustable for any day or for all 7 days of the week)

General

Power requirement	120 V AC, 60 Hz
Power consumption	33 W
AC outlet	Max. 400 W (unswitched)
Operating temperature	5°C to 40°C (41°F to 104°F)
Storage temperature	−20°C to +60°C (−4°C to +140°F)
Dimensions	Approx. 470 × 97 × 334 mm ($18\frac{5}{8} \times 3\frac{7}{8} \times 13\frac{1}{4}$ inches) including projecting parts and controls
Weight	Approx. 8.6 kg (18 lb 15 oz)

Accessories supplied

Antenna connector (1)
75-ohm coaxial cable (1)
Audio connecting cord (1)
S VIDEO connecting cord (1)
Video connecting cord (1)
Remote Commander RMT-424 with 3 size AA (R6) batteries (1)
Cleaning cassette (1)

Remote Commander

Remote control system	Infrared control
Power consumption	4.5 V DC, 3 size AA (R6) batteries
Dimensions	Approx. 105 × 40 × 160 mm ($4\frac{1}{10} \times 1\frac{1}{2} \times 6\frac{1}{4}$ inches)
Weight	Approx 220 g (8 oz) without batteries

Design and specifications are subject to change without notice.

SAFETY CHECK-OUT

After correcting the original service problem, perform the following safety checks before releasing the set to the customer:

1. Check the area of your repair for unsoldered or poorly-soldered connections. Check the entire board surface for solder splashes and bridges.
2. Check the interboard wiring to ensure that no wires are "pinched" or contact high-wattage resistors.
3. Look for unauthorized replacement parts, particularly transistors, that were installed during a previous repair. Point them out to the customer and recommend their replacement.
4. Look for parts which, though functioning, show obvious signs of deterioration. Point them out to the customer and recommend their replacement.
5. Check the line cord for cracks and abrasion. Recommend the replacement of any such line cord to the customer.
6. Check the B+ voltage to see it is at the values specified.
7. Check the antenna terminals, metal trim, "metallized" knobs, screws, and all other exposed metal parts for AC leakage. Check leakage as described below.

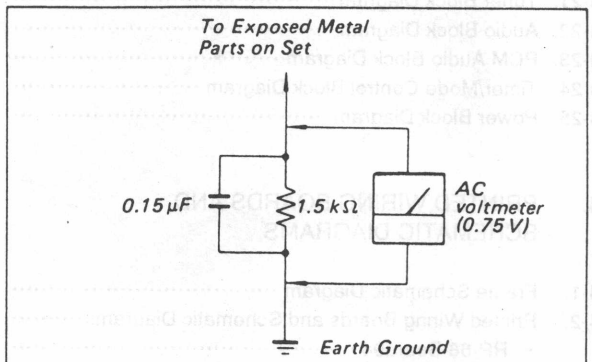

Fig. A. Using an AC voltmeter to check AC leakage.

LEAKAGE TEST

The AC leakage from any exposed metal part to earth ground and from all exposed metal parts to any exposed metal part having a return to chassis, must not exceed 0.5 mA (500 microampers). Leakage current can be measured by any one of three methods.

1. A commercial leakage tester, such as the Simpson 229 or RCA WT-540A. Follow the manufacturers' instructions to use these instruments.
2. A battery-operated AC milliammeter. The Data Precision 245 digital multimeter is suitable for this job.
3. Measuring the voltage drop across a resistor by means of a VOM or battery-operated AC voltmeter. The "limit" indication is 0.75 V, so analog meters must have an accurate low-voltage scale. The Simpson 250 and Sanwa SH-63Trd are examples of a passive VOM that is suitable. Nearly all battery operated digital multimeters that have a 2 V AC range are suitable. (See Fig. A)

SAFETY-RELATED COMPONENT WARNING !!

COMPONENTS IDENTIFIED BY SHADING AND MARK ⚠ ON THE SCHEMATIC DIAGRAMS, EXPLODED VIEWS AND IN THE PARTS LIST ARE CRITICAL TO SAFE OPERATION. REPLACE THESE COMPONENTS WITH SONY PARTS WHOSE PART NUMBERS APPEAR AS SHOWN IN THIS MANUAL OR IN SUPPLEMENTS PUBLISHED BY SONY. CIRCUIT ADJUSTMENTS THAT ARE CRITICAL TO SAFE OPERATION ARE IDENTIFIED IN THIS MANUAL. FOLLOW THESE PROCEDURES WHENEVER CRITICAL COMPONENTS ARE REPLACED OR IMPROPER OPERATION IS SUSPECTED.

ATTENTION AU COMPOSANT AYANT RAPPORT À LA SÉCURITÉ!!

LES COMPOSANTS IDENTIFIÉS PAR UN TRAME ET UNE MARQUE ⚠ SUR LES DIAGRAMMES SCHÉMATIQUES, LES VUES EXPLOSÉES ET LA LISTE DES PIÈCES SONT CRITIQUES POUR LA SÉCURITÉ DE FONCTIONNEMENT. NE REMPLACER CES COMPOSANTS QUE PAR DES PIÈCES SONY DONT LES NUMÉROS SONT DONNÉS DANS MANUEL OU DES SUPPLÉMENTS PUBLIÉS PAR SONY. LES RÉGLAGES DU CIRCUIT QUI SONT CRITIQUES POUR LA SÉCURITÉ DE FONCTIONNEMENT SONT IDENTIFIÉS DANS CE MANUEL. SUIVRE LES PROCÉDURES QUAND LES COMPOSANTS CRITIQUES SONT REMPLACÉS OU LE FONCTIONNEMENT IMPROPRE EST SUSPECTÉ.

TABLE OF CONTENTS

Section	Title	Page
SERVICE NOTE		7
1.	GENERAL	
	Hi8 (High Eight) Video System	8
	Location and Function of Parts and Controls	9
	Handling the Cassette	11
	Playing Back a Tape	12
	Various Playback Modes	13
	Using the Tape Counter	14
	Recording TV Programs	15
	Timer-Activated Recording	16
	PCM Recording and Playback — Digital Multi Audio System	18
	To Have the Unit Turned Off Automatically — Sleep Timer	20
	Index Function	21
	Transferring the Entire Control of a Tape to Another	23
	Various Tape Editing Methods	24
	Synchronized Editing from/onto a SONY VCR with the Control Terminal	24
	Manual Editing from/onto a VCR Not Equipped with Control Terminal	26
	Automatic Assemble Editing	27
	Audio Dubbing	28
	Antenna/Cable and TV/Monitor Connection	28
	Adjusting the TV	31
	Setting the Clock	31
2.	DISASSEMBLY	
2-1.	Removal of Upper and Lower Cabinets	32
2-2.	Removal of Front Panel	32
2-3.	Opening of The FT-37 Board	32
2-4.	Opening of The PW-62 Board	32
2-5.	Removal of The PR-12 Board	33
2-6.	Opening of The SP-7 Board	33
2-7.	Removal of TS-49 and YU-82 Boards	33
2-8.	Opening of The VI-57 Board	34
2-9.	Opening of The AU-54 Board	34
2-10.	Removal of The DT-63 Board	34
2-11.	Removal of The RP-68 Board	34
2-12.	Removal of The DR-35 Board	35
2-13.	Removal of Power Transformer (DS-15 Board)	35
2-14.	Removal of Rear Panel	36
2-15.	Removal of Mechanism Block	36
2-16.	Removal of LS Cassette Compartment Assembly	37
2-17.	Ejecting Without Applying The Power	37
2-18.	Replacement of Cassette Holder Assembly	38
2-18-1.	Removal	38
2-18-2.	Installation	38
2-19.	Internal Views	39
3.	DIAGRAMS	
3-1.	Circui Boards Location	40
3-2.	Overall Block Diagram	41
3-3.	Video Block Diagram	46
3-4.	Servo Block Diagram	51
3-5.	System Control Diagram	55
3-6.	System Control — Video Block Interface	59
3-7.	System Control — Servo (Capstan Motor) Block Interface	59
3-8.	System Control — Servo (Drum Motor) Block Interface	59
3-9.	System Control — Servo (Reel Motor) Block Interface	61
3-10.	System Control — Servo (ATF Servo) Block Interface	61
3-11.	System Control — Servo (STILL) Block Interface	63
3-12.	System Control — Servo (Head Selecting) Block Interface	63
3-13.	System Control — Servo (And Others) Block Interface	36
3-14.	System Control — MD Block Interface	65
3-15.	System Control — AFM Audio Block Interface (AU-54 Board)	67
3-16.	Pcm Index Controller — PCM Audio Block Interface	67
3-17.	System Control — PCM Audio Block Interface	69
3-18.	Servo — Video Block Interface	69
3-19.	PCM Audio — Video Block Interface	70
3-20.	PCM Audio — Servo Block Interface	70
3-21.	Tuner Block Diagram	72
3-22.	Audio Block Diagram	75
3-23.	PCM Audio Block Diagram	79
3-24.	Timer/Mode Control Block Diagram	83
3-25.	Power Block Diagram	86
4.	PRINTED WIRING BOARDS AND SCHEMATIC DIAGRAMS	
4-1.	Frame Schematic Diagram	89
4-2.	Printed Wiring Boards and Schematic Diagrams	94
	• RP-68 Board94	94
	• VI-57 Board	101
	• CH-44, YC-56, JG-11, NC-8 Boards	110
	• SP-7 (System Control), MS-4, LS-9, TM-94 Boards	120
	• SP-7 (Servo), DM-18 Boarsd	130
	• RS-17, TE-5, TE-6, LD-1 Boards	142
	• SP-7 (PCM Audio) Board	149
	• AU-54 Board	157
	• AD-12, NR-6, MK-2, MJ-12 Boards	165
	• AF-20 Board	173
	• PW-62 Board	177
	• TS-49, TU-82, PR-12 Boards	181
	• FT-37, CB-8, FR-39 Boards	186
	• IO-16, IO-17 Boards1	197
	• DL-15, DO-1, DT-63, DS-15, DR-35 Boards	202
4-3.	Semiconductors	208

Section	Title	Page
5.	EXPLODED VIEWS	
5-1.	Front Panel and Case Assemblies	209
5-2.	Power Block and Rear Panel Assemblies	210
5-3.	Board Assembly	211
5-4.	LS Cassette Compartment Assembly	212
5-5.	Chassis Assembly 1	213
5-6.	Chassis Assembly 2	214
5-7.	Chassis Assembly 3	215
5-8.	Chassis Assembly 4	216
6.	ELECTRICAL PARTS LIST	217
	HARDWARE LIST	262
7.	MECANICAL ADJUSTMENT	
7-1.	Preparation Items for Mechanism Section Checking, Adjustment and Replacement	263
7-1-1.	LS Cassette Compartment Assembly and Operation without Tape Inserted	263
7-1-2.	Handling of Mode Selector	264
7-2.	Periodic Check and Maintenance	265
7-2-1.	Cleaning of Rotary Drum Assembly	265
7-2-2.	Cleaning of Tape Path	265
7-2-3.	Cleaning of Drive System	265
7-2-4.	Periodic Check	266
7-2-5.	Service Jig Table	267
7-3.	Mechanical Check, Adjustment and Replacement	268
7-3-1.	Fly wheel	268
7-3-2.	S Reel Table Assembly	269
7-3-3.	T Reel Table Assembly	270
7-3-4.	Pinch Press Arm Assembly	271
7-3-5.	Tension Regulator Arm Assembly	272
7-3-6.	Tension Regulator Band Assembly	273
7-3-7.	Threading Motor Assembly	274
7-3-8.	Threading Ring Assembly	275
7-3-9.	Pinch Roller Arm Assembly	277
7-3-10.	Slant Guide Chassis Assembly	279
7-3-11.	Entrance Guide Assembly (No. 2 Guide Assembly)	280
7-3-12.	L Slider Assembly	281
7-3-13.	L-SW Assembly	282
7-3-14.	Brake Plunger	284
7-3-15.	M-SW Assembly	285
7-3-16.	M Slider	287
7-3-17.	Capstan Motor	289
7-3-18.	Replacement of Rotary Upper Drum	290
7-3-19.	Drum Assembly Replacement	291
7-3-20.	Adjustment after Replacement of No. 3 Guide and No. 4 Guide	293
7-3-21.	No. 5 Guide Assembly	293
7-3-22.	FWD Back Tension Adjustment	294
7-3-23.	Reel Motor Replacement	295
7-3-24.	Check of S and T Main Brake Torques	296
7-3-25.	Check of S and T Soft Brake Torques	297
7-3-26.	Check of REW Brake Torque	298
7-3-27.	Check by FWD and RVS Winding Torque Cassette	298
7-4.	Tape Path Adjustment	299
7-4-1.	Connection of Track Shift & Monitor Jig	301
7-4-2.	Preparation for Adjustment	303
7-4-3.	Entrance Side Adjustment	304
7-4-4.	Exit Side Adjustment	306
7-4-5.	Checking After Adjustment	307
8.	ELECTRICAL ADJUSTMENT	
8-1.	Preparations	311
8-1-1.	Connection of Equipment	311
8-1-2.	Confirmation of Input Signal	312
8-1-3.	Recording Mode Selection (Hi8 mode/Normal mode)	314
8-2.	Power Supply Block Adjustment	314
8-2-1.	Oscillation Frequency Adjustment (DR-35 Board)	314
8-2-2.	REG 5V Adjustment (DR-35 Board)	314
8-2-3.	REG 9V Adjustment (DR-35 Board)	314
8-2-4.	Voltage Check (DR-35 and DT-63 Boards)	315
8-3.	System Control System Adjustment	315
8-3-1.	Timer Clock Adjustment (FT-37 Board)	315
8-4.	Servo System Adjustment	316
8-4-1.	Reel Bias Adjustment (SP-7 Board)	316
8-4-2.	REC ATF Level Check (SP-7 Board)	316
8-4-3.	Drum Free Speed Adjustment (SP-7 Board)	316
8-4-4.	Capstan Free Speed Adjustment (SP-7 Board)	316
8-4-5.	Switching Position Adjustment (SP-7 Board)	317
8-4-6.	ATF BPF Balance Adjustment (SP-7 Board)	317
8-4-7.	SLOW Tracking Adjustment (SP-7 Board)	318
8-4-8.	Tracking Adjustment (SP-7 Board)	318
8-4-9.	STILL Adjustment (SP-7 Board)	318
8-4-10.	FORWARD SLOW Adjustment (SP-7 Board)	318
8-4-11.	SLOW fH Adjustment (SP-7 Board)	319
8-5.	Video Adjustment	319
8-5-1.	Playback Frequency Characteristics Adjustment (RP-68 Board)	320
8-5-2.	Flying Erase Check (RP-68 Board)	320
8-5-3.	X'tal Oscillator f0 Adjustment (CH-44/VI-57 Board)	320
8-5-4.	Y/C Separation Comb-type Filter Adjustment (VI-57 Board)	321
8-5-5.	Y Comb-type Filter Adjustment (VI-57 Board)	321
8-5-6.	SYNC AGC Adjustment (VI-57 Board)	321
8-5-7.	31 AMP Gain Adjustment (VI-57 Board)	322
8-5-8.	VIDEO OUT Level Adjustment (VI-57 Board)	322
8-5-9.	PB Emphasis Adjustment (VI-57 Board)	322
8-5-10.	STD Mode PB Y Level Adjustment (VI-57 Board)	322
8-5-11.	Hi8 Mode PB Y Level Adjustment (VI-57 Board)	323
8-5-12.	STD Mode Y FM Carrier Frequency, Y FM Deviation Adjustment	323

Section	Title	Page
8-5-13.	Hi8 Mode Y FM Carrier Frequency, Y FM Deviation Adjustment	324
8-5-14.	378fH VCO Adjustment (CH-44/VI-57 Board)	325
8-5-15.	Chroma Emphasis f0 Adjustment (CH-44/VI-57 Board)	325
8-5-16.	Carrier Balance Adjustment (CH-44/VI-57 Board)	325
8-5-17.	1H Comb-type Filter Adjustment (YC-56 Board)	325
8-5-18.	2H Comb-type Filter Adjustment (YC-56 Board)	326
8-5-19.	DC Offset Adjustment (YC-56 Board)	326
8-5-20.	C Comb-type Filter Cancel Adjustment (YC-56 Board)	326
8-5-21.	Ys Level Adjustment (YC-56 Board)	326
8-5-22.	REC Y Level Adjustment (VI-57 Board)	327
8-5-23.	REC C Level Adjustment (VI-57 Board)	327
8-5-24.	REC RF Level Adjustment (VI-57 Board)	327
8-5-25.	D.O.C. Level Adjustment (VI-57 Board)	328
8-5-26.	Direct Y Signal Level Adjustment (JG-11 Board)	328
8-5-27.	Direct C Signal Level Adjustment (JG-11 Board)	328
8-6.	Audio System Adjustments	329
8-6-1.	PCM Audio System Adjustment	329
8-6-2.	AFM Audio System Adjustment	332
8-7.	Turner System Adjustment	334
8-7-1.	RF AGC Adjustment (TU-82 Board)	334
8-8.	Adjustment Related Parts Arrangement Diagrams	338

REMOTE COMMANDER (RMT-424) 343

Removal of cassette when there is a malfunction with cassette loaded

[Removal not possible with tape wound on drum]
(See Fig. 1.)

1) Remove the upper and bottom cases.
2) Rotate the white gear next to the drum on the back of the mechanism section in the counterclockwise direction and release the tape wound on the drum.
3) After releasing the wound tape, remove the cassette by the procedure below.

Note: If the tape is ejected without the tape inside the cassette half even if the tape winding has been released, the tape will be creased by closing of the cassette half lid when ejected.

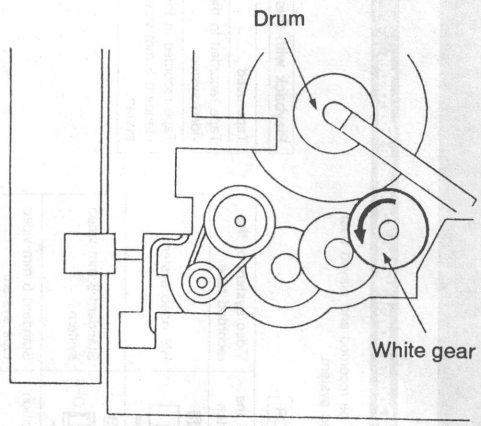

(Fig. 1.)

[Removal not possible with tape inside cassette half]
(See Fig. 2.)

1) Remove the upper case.
2) Push the white lever in the direction of arrow.
3) Rotate the pulley in the counterclockwise direction, and eject manually.

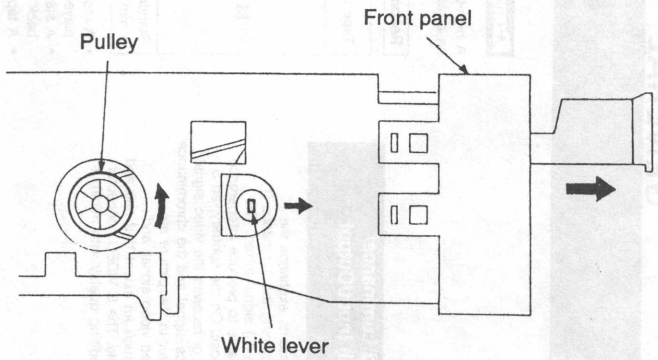

(Fig. 2.)

Hi8 Head cleaning

Since the new recording system is used for this unit, so the video head structure is more precisional than conventional one.
When cleaning, use the supplied or separately available (V8-25CLH) cleaning tape.
The conventional cleaning tape (V8-25CL) is not suitable for cleaning the head of this unit.
Moreover, the supplied and separately available (V8-25CLH) cleaning tape are to be used for the conventional units.

This section is extracted from instruction manual.

Hi8 (High Eight) Video System

The 8 mm video system employs a metal powder tape. This means the video cassette recorder is capable of recording a large amount of information and enhances picture quality. The Hi8 video system has been developed, taking advantage of the 8 mm video system. The main characteristics of the Hi8 are as follows:

Super High Quality Picture

The information capacity is a key element for picture improvement. It can be increased by shifting up to the FM carrier frequency range. In the Hi8 video system, the FM carrier frequency range of the luminance signal is shifted up to 5.7–7.7 MHz. This is higher than the 4.2–5.4 MHz range of the standard 8 mm video system. Thanks to this, the horizontal resolution is improved to more than 400 lines.

Use of High-Grade Tape Corresponding to the Hi8 Video System

Metal evaporated tape is ideal for video systems because it has large magnetic energy that allows for high-density recording. The Hi8 video cassette recorder uses such high-grade tape for the Hi8 video system, covering a wide frequency range, to achieve a high-quality video signal for recording/playback.

Frequency allocation of the standard video system

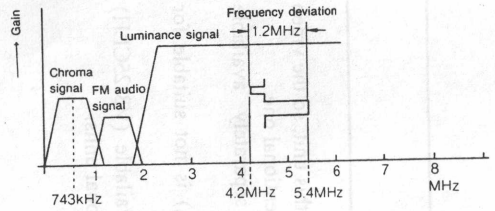

Frequency allocation of the Hi8 video system

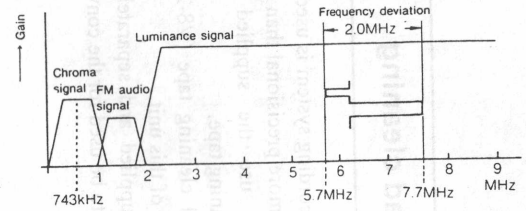

S VIDEO (Separated Luminance/ Chrominance Signal) Input/Output Connectors

Conventionally, video equipments exchange the composite video signal containing the luminance (Y) signal and the chrominance (C) signal mixed. The composite video signal is liable to produce interference resulting in picture quality loss. On the contrary, an S VIDEO connector transmits or receives the video signal separated into the luminance signal and the chrominance signal. Flickers and color blur in the picture are minimized with the separated video signal, and sharpness is enhanced to such an extent that hair and fine stripes are clearly visible. The S VIDEO connector also assures an excellent editing quality with minimum picture quality loss.

Compatibility with Conventional Video Cassette Recorder

A high-quality picture can be recorded and played back on a tape for the Hi8 video system.

Recording with this VCR

Tape used	Setting of the Hi 8 switch	Video system of the recorded tape
Hi 8 tape	Hi 8 AUTO	Hi8 video system
	Hi 8 OFF	Standard 8 mm video system
Standard 8 mm tape	Either position will do.	Standard 8 mm video tape system

- A tape recorded in the Hi8 video system cannot be played back with an conventional 8 mm VCR.
- A standard 8 mm tape cannot be recorded and played back in the Hi8 video system.
- A tape for the Hi8 video system cannot be recorded and played back in the Hi8 video system with a conventional VCR.
- The recording tape speeds in the Hi8 are compatible with the conventional 8 mm video system. Recording/playback time is 4 hours using a E6/P6-120 tape or the equivalent.

Playback with this VCR

Tape used	Playback video system
Tape recorded in the Hi8 video system	The recording video system is automatically selected.
Tape recorded in the standard 8 mm video system	

Location and Function of Parts and Controls

A-1

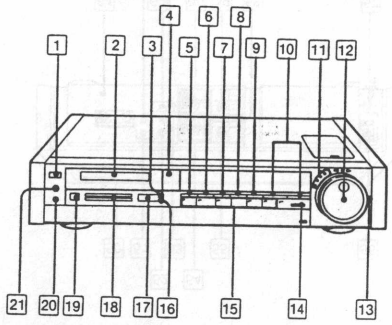

Front Panel A-1

1 **POWER switch and indicator**

2 **Cassette holder**

3 **SYNCHRO EDIT indicator**

4 **OPEN/CLOSE button**

5 **COUNTER/REMAIN button**

6 **COUNTER RESET button**

7 **TAPE RETURN button**

8 **INDEX button**

9 **TV/VTR button**

This button functions only when the VHF/UHF IN connector at the rear is connected. To view the program selected on the recorder, press this button so that the VTR indicator appears in the display window (VTR mode). To view the TV program while recording another, press this button so that the VTR indicator disappears (TV mode).

10 **CHANNEL/TRACK/INDEX buttons**

11 **JOG dial mode indicators**

Light when the JOG dial is being used for the associated operations.
JOG/SHUTTLE: For selecting the playback speeds in various playback modes.
CHANNEL: For selecting the channels or to designate the tracks.
TIMER: For setting the clock or timer-activated recordings.
INDEX: For designating the index numbers.

12 **JOG dial**

13 **SHUTTLE ring**

14 ● **REC (recording) switch and indicator**

15 **Tape transport buttons and indicators**

◄◄ REW (rewind), ► PLAY (playback), ►► FF (fast-forward), ■ STOP, ❚❚/►◄ PAUSE/STILL, x2 (double speed playback)

16 **LINE 2 indicator**

17 **Hi 8 (Hi-Eight playback/recording) indicator**

18 **Peak program meter**

19 **Remote control detector**

20 **HEADPHONES jack** (stereo minijack)

Connect stereo headphones.

21 **PHONE LEVEL (headphone level) control**

Adjust the volume of headphones connected.

A-2

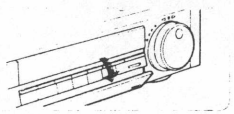

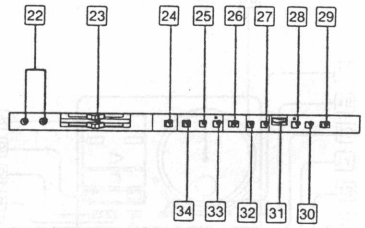

A-3

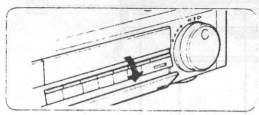

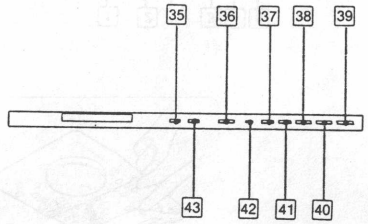

Inside the front panel A-2

22 **MIC (microphone) jacks** (minijack)

Connect a microphone with a mini plug.

23 **REC (recording) LEVEL controls**

24 **Hi 8 (High Eight) mode switch**

25 **SYNCHRO EDIT button**

26 **PCM MODE selector**

27 **INDEX ERASE button**

28 **AUDIO DUB button and indicator**

29 **AUDIO MONITOR selector**

30 **STD (standard) AUDIO selector**

31 **SHARPNESS control**

32 **INDEX MARK button**

33 **EDIT button and indicator**

34 **LINE selector**

Rear of the front panel A-3

35 **INPUT SELECT button**

36 **SLEEP button**

37 **CHECK button**

38 **TIMER SET button**

39 **TIMER REC ON/OFF button**

40 **NEXT button**

41 **CLEAR button**

42 **CLOCK SET button**

43 **REC MODE button**

A-4

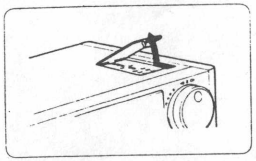

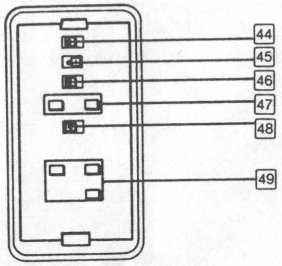

A-5

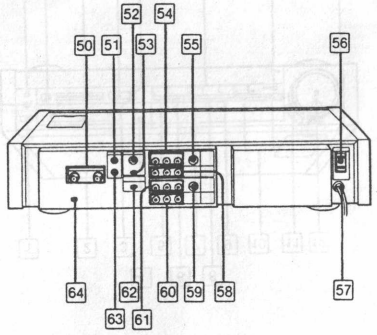

Upper compartment A-4

44 AUTO INDEX switch

45 COMMAND MODE selector

46 ANTENNA SW (switch)

47 SLOW/STILL ADJ (adjust) buttons

48 AUTO STEREO switch

49 Buttons used for channel presetting
ERASE button
ADD button
NORMAL/CATV button

Rear panel A-5

50 VHF/UHF IN/OUT terminals

51 CONTROL S IN jack (minijack)

52 CONTROL L connector (5-pin DIN)

53 SLAVE/MASTER selector

54 LINE IN 1 AUDIO/VIDEO jacks (phono jack)

55 LINE IN 1 S VIDEO connector (4-pin mini-DIN)

56 AC OUTLET (unswitched, 400 W max.)

57 AC power cord

58 LINE IN 2 AUDIO/VIDEO jacks (phono jack)

59 LINE OUT 1 S VIDEO connector (4-pin mini-DIN)

60 LINE OUT 2 AUDIO/VIDEO jacks (phono jack)

61 LINE OUT 1 AUDIO/VIDEO jacks (phono jack)

62 DIGITAL MULTI PLAY selector

63 CONTROL S OUT jack (minijack)

64 RF UNIT channel selector

A-6

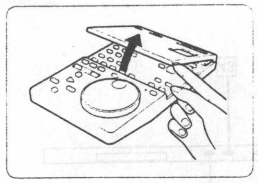

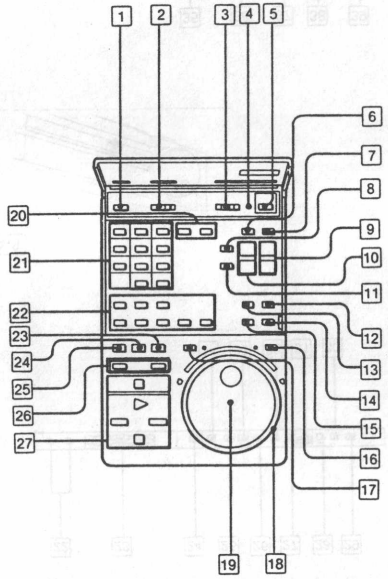

Remote Commander RMT-424 A-6

The buttons without the * mark have the same function as the buttons on the VCR with the similar name or mark.
The buttons with an orange dot can be used to operate Sony TVs having a ■ mark.

1 OPEN/CLOSE button

2 Command mode selector*

3 Remote control TV/VTR selector*

4 Transmitting indicator*
Lights when any button on the Commander is pressed.

5 POWER switch

6 MUTING button*
Press to mute the sound. Press again to restore it.

7 TV/VTR button

8 DISPLAY button*
Press to retain the on-screen display. Press again to extinguish it.

9 TRACK/CH (channel) +/– button

10 VOL (volume) +/– buttons*

11 SLEEP button

12 COUNTER RESET button

13 COUNTER/REMAIN button

14 SYNCHRO EDIT button

15 AUDIO DUB button

16 TRACK/CH/INDEX button and indicator*
Press when using the JOG dial for digital multi audio track, channel or index number selection.

17 JOGSHUTTLE mode button and lamp*
Press when using the JOG dial and SHUTTLE ring for various speed playback.

18 SHUTTLE ring

19 JOG dial

20 INDEX MARK/ERASE button

21 Number buttons*

22 Various speed playback buttons*
▶◀ (still picture), ◀II/II▶ FRAME (frame-by-frame picture), x1/10/x1/5 (slow motion picture), x1 (normal speed picture), x2 (double speed picture), SCAN (for picture search)

23 AUTO PB (automatic playback) button
Press to play back a tape automatically from the beginning of the tape after rewinding.

24 TAPE RETURN button

25 INDEX button

26 ● REC (recording) buttons
To start recording, press these buttons simultaneously.

27 Tape transport buttons

Handling the Cassette

C-1

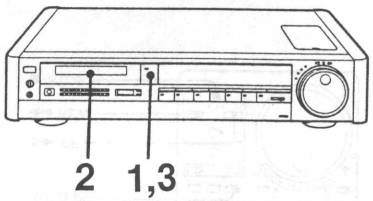

Inserting a Cassette C-1

1 **Press OPEN/CLOSE.**
The power will be turned on automatically. (Auto power on)
The cassette holder will be ejected.

2 **Insert the cassette with the window side up.**

3 **Press OPEN/CLOSE to close the cassette holder.**

Ejecting a Cassette

1 **Press OPEN/CLOSE.**

2 **Eject the cassette.**
Press OPEN/CLOSE to close the holder.

C-2

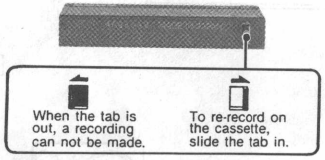

To Prevent Accidental Erasure C-2

When a new recording is made on a previously recorded cassette, the previous recording will be automatically erased. To avoid erasing a recording unintentionally, slide out the tab on the cassette to cover the opening. (A red mark will appear.)

Recording/Playback Time

The recording time of a cassette in the LP mode is twice as long as that in the SP mode. The quality of the recording picture in the LP mode, however, will not be as good as that in the SP mode. You can select the recording speed with the REC MODE button. The playback speed is automatically set.

Cassette used	SP	LP
P6-15	15 min.	30 min.
E6/P6-20	20 min.	40 min.
P6-30	30 min.	1 hr.
P6-45	45 min.	1 hr. 30 min.
E6/P6-60	1 hr.	2 hr.
P6-90	1 hr. 30 min.	3 hr.
E6/P6-120	2 hr.	4 hr.

Notes on cassettes
- Never store ME (metal-evaporated) cassettes in humid places because they rust easily.
- Never insert anything in the small holes at the rear of the cassette as the VCR distinguishes between ME and MP cassettes by the shape of a hole.
- Store cassettes in their cases and keep them in an upright position to prevent intrusion of dust and uneven winding.
- When the VCR is not in use, remove the cassette.

Use of ME cassettes will be recommended to obtain a high-quality picture in the LP mode with the Hi8 video system activated.

Playing back a Tape

D-1

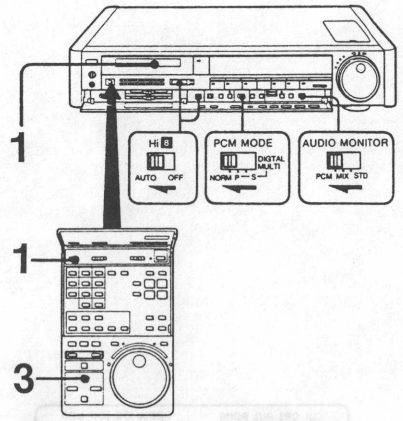

D-2

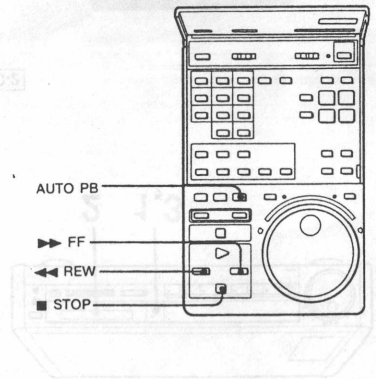

Operation D-1

You can use the buttons on the VCR with the same name or mark as those on the Commander.

Before operating
- Hi 8 switch: AUTO
- PCM MODE selector: NORM
- AUDIO MONITOR selector: PCM

1 Press OPEN/CLOSE and insert a cassette.
Press OPEN/CLOSE again to close the cassette holder.

2 Turn on the TV and select the input for the VCR.
For the TV without video/audio inputs, select the channel (3CH or 4CH) for the VCR.

3 Press ▶ PLAY. Playback will begin.
The indicator on the ▶ PLAY button on the VCR will light during playback.

If playback does not start
Readjust the channel for the VCR on the TV. (See page 52.)

D-2

To stop playback	Press ■ STOP.
To advance the tape rapidly	Press ▶▶ FF.
To rewind the tape	Press ◀◀ REW.
To play back a tape from the beginning after rewinding — Auto play	On the Remote Commander: Press AUTO PB. On the VCR: Press ▶ PLAY keeping ◀◀ REW.

When the tape reaches the end during playback

It will be automatically rewound. The power will remain on.

Picture adjustment

Turn the SHARPNESS control toward SHARP to get a sharp picture or toward SOFT for a soft picture.

If the playback picture does not appear
Check the DIGITAL MULTI PLAY selector at the rear. Set the selector to AUTO.

If the playback picture does not appear when the recorder is connected to a TV without video/audio inputs
Set ANTENNA SW inside the upper compartment of the VCR to AUTO. When the selector is set to MANUAL, press TV/VTR on the Commander or the recorder so that the VTR indicator in the display window lights.

D-3

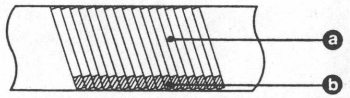

To Select the Monitor Sound

You can select the monitor sound of various kinds of the recorded tape with the AUDIO MONITOR selector.

Audio recording pattern on a video tape D-3

ⓐ shows the standard track.
ⓑ shows the PCM track.

Kind of recorded tape	Track to be played back	Setting of the AUDIO MONITOR selector
Stereo ●	PCM	PCM
FM simulcast	PCM	PCM
SAP (Second Audio Programs) ●	PCM and/or standard	To monitor MAIN: PCM To monitor SAP: STD To monitor both: MIX
Audio dubbed ●	PCM and standard	MIX

To record the above kind of tapes, refer to the pages in ● .

If the sound is not heard or heard only intermittently
When a tape which has been recorded on a video camera recorder or a video cassette recorder without the PCM function is played back on this unit, set the AUDIO MONITOR selector to STD. The PCM indicator may blink, but it does not affect the sound.

When the TV without the video/audio inputs is connected
Connect your stereo system to this unit to monitor the stereo sound.

Various Playback Modes

E-1

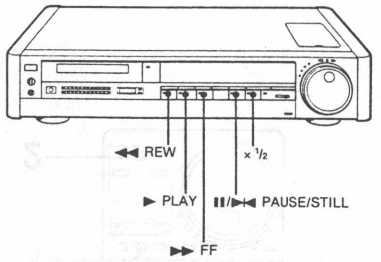

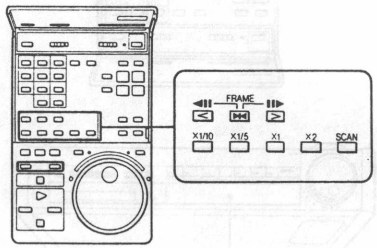

Using the Buttons on the Remote Commander or the VCR E-1

Still picture (playback pause)

Press II/►◄ PAUSE/STILL during playback. The sound will be muted. To resume normal playback, press ► PLAY.

Double speed playback

Press x2 during playback. The sound will be heard. To resume normal playback, press ► PLAY.

Picture search — Viewing the picture at a fast speed to find a particular scene

Keep pressing ◄◄ REW or ►► FF during playback or in still picture mode. Release the button to resume normal playback.

Using the Buttons on the Commander Only E-1

Slow speed playback

Press x1/10 or x1/5 during playback. Slow motion picture at 1/10 or 1/5 normal speed will be obtained. The sound will be muted. To resume normal playback, press ► PLAY.

Frame-by-frame playback

Press II► (forward) or ◄II (reverse) in still picture mode. To resume normal playback, press ► PLAY.

Locked picture search — Viewing the picture during fast-forward or rewind

In normal playback or still picture mode, press > (forward) or < (reverse) to select the tape transport direction and then press SCAN. To resume normal playback, press ► PLAY.

If the still picture appears to shake
Press SLOW/STILL ADJ inside the upper compartment until the picture stabilizes.

If noise band appears in slow speed playback
Adjust SLOW/STILL ADJ. When the tape speed (SP/LP) is changed, readjust it.

When the unit is in picture search mode
Streaks will appear and sound will be muted.

E-2

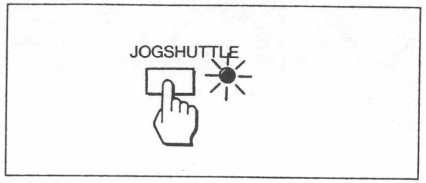

E-3

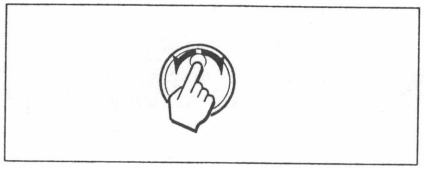

E-4

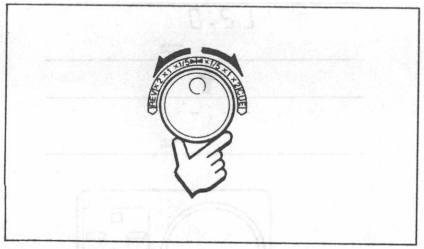

Using the JOG dial and SHUTTLE ring

1 **Set the unit to the still picture mode.**

2 **Press the JOGSHUTTLE button on the Commander to turn on the indicator if the Commander is to be used.** E-2

3 **Turn the JOG dial.**
Playback occurs according to the speed at which you turn the dial. (x1/10, x1/5, normal speed) E-3

Turn the SHUTTLE ring and hold it at the desired speed position.
The approximate positions of the various speeds are indicated on the Commander (x1/5, normal, double, continuous picture search). E-4

Turn it clockwise for forward playback, or counterclockwise for reverse playback.

4 **When you release JOG or SHUTTEL, the picture will freeze again.**

Notes
- When JOG or SHUTTLE is in use, no tape transport buttons function.
- If the JOGSHUTTLE button on the Commander is pressed during playback, the CHANNEL of the JOG dial mode indicators on the VCR will light and the playback speed cannot be changed with the JOG dial on the VCR.

Using the Tape Counter

The tape counter in the display window indicates the approximate running time of the tape and the relative positiion of programs on the tape.

To Index the Tape Contents

Press the COUNTER RESET at the beginning of the tape to set the counter to zero. By noting the counter reading at a particular point, you can easily find that point later by referring to the counter.

To Stop the Tape at a Particular Point — Tape Return F-1

F-1

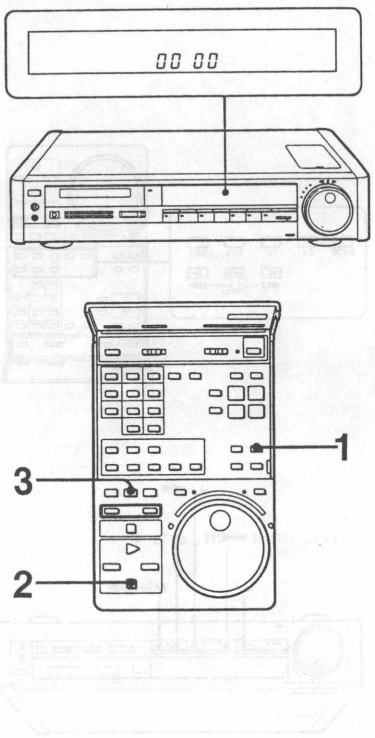

1 **During recording or playback, press COUNTER RESET at the point you want to locate later.**

2 **When recording or playback is finished, press ■ STOP.**

3 **Press TAPE RETURN.**
The tape will be rewound or advanced close to the counter zero point.

To Start Playback Automatically from the Counter Zero Point — Tape Return Play

1 **Follow steps 1 to 3 in "Tape Return" above.**

2 **Press ▶ PLAY while the tape is being rewound or advanced.**
The tape will be rewound or advanced close to the counter zero point and start playback.

F-2

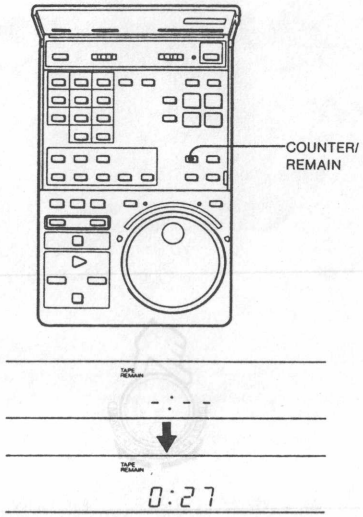

To Get to Know the Remaining Recording or Playback Time F-2

During recording or playback, press COUNTER/REMAIN. After the counter shows "–:––" for 5 to 20 seconds, the remaining recording or playback time will be displayed.
The illustration shows that the remaining time is 27 minutes.

To return to the normal tape counter
Press COUNTER/REMAIN again.

Notes on the remaining time counter
- The remaining time counter may not be accurate for
  — commercially available recorded tapes.
  — damaged tapes and non-standard tapes.
  — the beginning of a tape, especially when the tape has just been rewound (by several minutes max.).
- The remaining time counter will be changed to "–:––" when an unrecorded portion of the tape is played back, when the recorded tape speed has been changed, or when the tape is run rapidly.

Notes on the remaining time counter in various speed playback modes
- When you want to display the remaining time during x2 forward, x1 reverse or x2 reverse playback, press COUNTER/REMAIN to display the remaining tape counter after playing back the tape in normal playback mode and then resume the desired playback mode.
- The remaining time counter will stop when the VCR is set to frame-by-frame or slow motion picture mode.

Recording TV Programs

G-1

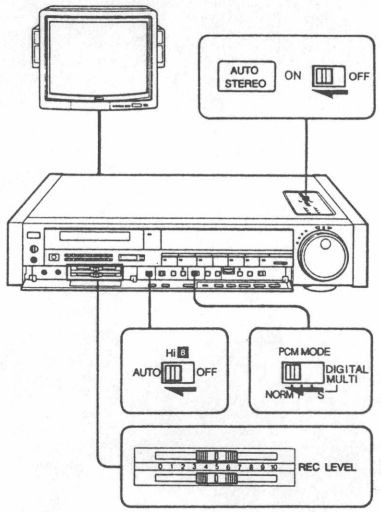

G-2

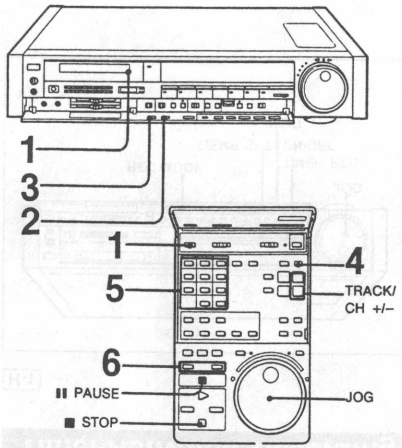

Make sure that you have finished all the connections and adjustments through pages 47 to 55.

Preparation G-1

- Turn on the TV and select the video input on the TV or select the channel for the recorder.
- REC LEVEL controls: 5 position
  Hi 8 switch: AUTO
  PCM MODE selector: NORM
  AUTO STEREO selector: ON

Operation G-2

You can also use the buttons on the VCR with the same name or mark as those on the Commander.

1 Press OPEN/CLOSE and insert a cassette.
The power will be automatically turned on.
Press OPEN/CLOSE again to close the cassette holder.

2 Select the recording speed (SP or LP).

3 Press INPUT SELECT so that the TUNER indicator appears in the display window.

4 Press TV/VTR so that the VTR indicator appears in the display window (only for a TV which is connected to the VHF/UHF INPUT on this unit).

5 Select the channel to be recorded with the number buttons.
e.g. To select channel 16

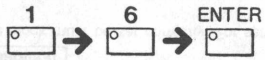

You can select the channel by scanning with TRACK/CH +/– or JOG.

6 Press two ● REC buttons simultaneously (or slide ● REC on the VCR to the right) to start recording.

To stop recording

Press ■ STOP.

To stop recording momentarily

Press II PAUSE.
To resume recording, press II PAUSE again or ▶ PLAY.
To protect the video heads and the tape, the pause mode will be automatically released after about 7 minutes and recording will stop.

When the recording is made to the end of the tape during recording

The tape will be automatically rewound to the beginning and the unit will enter the stop mode. The power remains on.

To make a frame-by-frame recording

To tape an animated program, proceed as follows:
Press ● REC buttons on the Commander or slide ● REC to the right on the VCR while the unit is in recording pause mode. A very short recording of approximately 7 or 8 frames will be made and then the VCR will automatically enter recording pause mode again. Repeat this operation as many times as you like.

To watch one TV program while recording another
Press TV/VTR so that the VTR indicator goes off. Select the channel you want to watch on the TV.
If your TV is equipped with a TV/VTR input selector, simply set the selector to TV and select the desired channel on the TV.

If the cassette is ejected when the ● REC buttons are pressed
The tab on the cassette is slid out. Slide the tab in or use a new cassette.

If a stereo program is noisy
Set AUTO STEREO to OFF. The noise will be reduced though the sound is heard in monaural.

If you started recording of an unnecessary scene
You can return the tape to the desired point and set the VCR to recording standby mode.
1 Press ■ STOP to stop recording.
2 Press ▶ PLAY and then press II/▶I◀ to set the VCR to playback pause mode.
3 Locate the desired point where you wish to start recording by turning the JOG dial counterclockwise.
4 Press the ● REC buttons. The VCR will enter recording pause mode.
5 At the desired point, press II/▶I◀ PAUSE/STILL to release pause mode.
Recording will begin.

To Record Multichannel TV Sound (MTS) Broadcasts

To record a stereo broadcast

When a stereo program is received, the STEREO indicator will appear in the display window. With the usual recording procedure, the program will be recorded in stereo on the PCM track and in monaural on the standard track.

- Make sure AUTO STEREO inside the upper compartment is set to ON.

To Record a SAP (Second Audio Program) broadcast

Press the STD AUDIO selector so that the SAP indicator appears in the display window. The SAP sound will be recorded on the standard track while the MAIN sound is recorded on the PCM track. To record a MAIN broadcast only, press STD AUDIO to display the MAIN indicator. The MAIN sound will be recorded on both the PCM and standard tracks.

When a SAP sound is not to be recorded
Be sure to set the STD AUDIO selector to MAIN. If it is set to SAP and there is no SAP broadcast, no sound is recorded on the standard track.

G-3

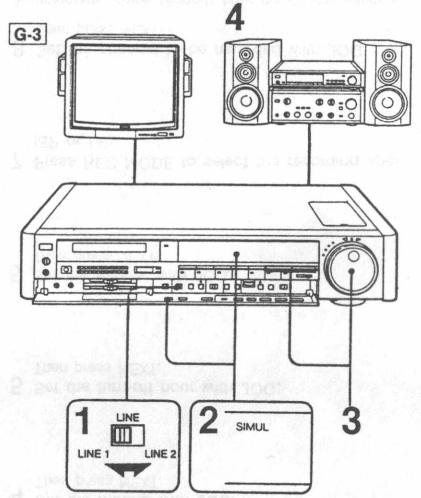

FM simulacast recording G-3

Sometimes a TV station and an FM radio station will broadcast a program simultaneously.
By connecting an FM tuner you can record a TV program in high-fiderity stereo. The picture and sound of the TV program are recorded on the standard track and the sound from the FM tuner is recorded on the PCM track.

Operation

1 Set LINE to either LINE 1 or 2 according to the line inputs connected to the FM tuner.

2 Press INPUT SELECT so that the SIMUL indicator appears in the display window.

3 Select the channel you want to record on the VCR.

4 Select the station you want to record on the FM tuner.

Timer-Activated Recording

H-1

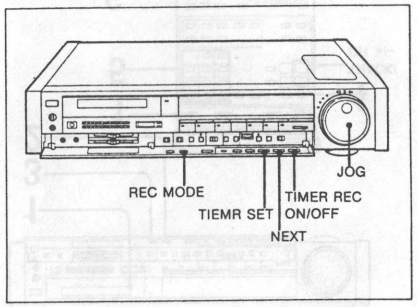

You can preset up to six recordings to be made between today and Saturday of the week after next.

Example:

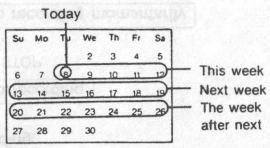

Operation H-1

Preparation

- The clock must be set correctly. For setting, see page 55.
- Be sure the safety tab of the cassette has not been slid out.
- Make sure the cassette tape is long enough to record all programs.
- INPUT SELECT switch: TUNER
  PCM MODE selector: NORMAL
  REC LEVEL controls: 5 position
  Hi 8 switch: AUTO

Buttons used for timer setting

NEXT button: Every time you press this button, the item to be set will blink.

JOG dial: To set the week and day, the turn-on and turn-off times and the channel, turn clockwise to advance and counterclockwise to reverse.

H-2

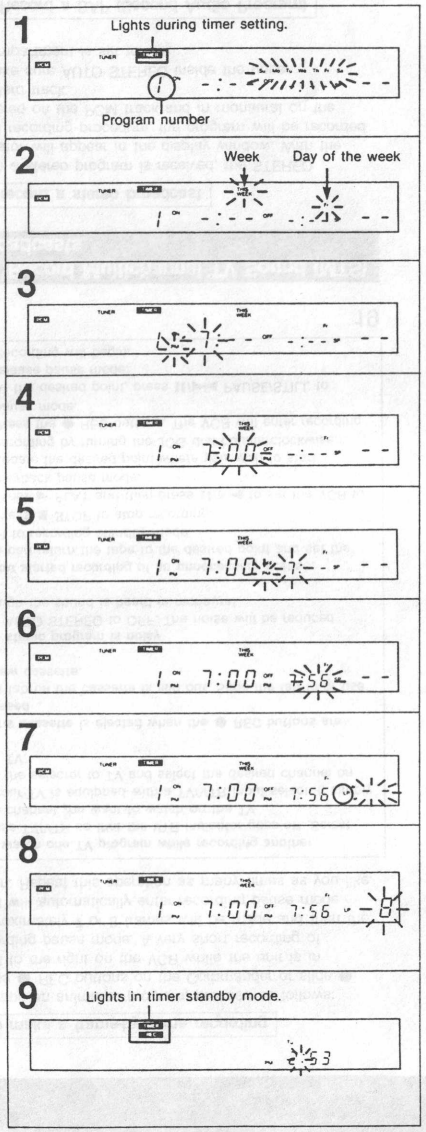

Operation H-2

Suppose you want to make a recording of channel 8 from 7 P.M. to 7:56 P.M. on Friday this week.

1 Press TIMER SET.

2 Set the week and day with JOG.
Then press NEXT.

3 Set the turn-on hour with JOG.
Then press NEXT.

4 Set the minute with JOG.
Then press NEXT.

5 Set the turn-off hour with JOG.
Then press NEXT.

6 Set the minute with JOG.
Then press NEXT.

7 Press REC MODE to select the recording speed (SP or LP).

8 Set the channel to be recorded with JOG.
Then press NEXT.

Approximately three seconds later the display window will change to the counter display. To preset another program, repeat steps 1 to 8. Up to 6 programs can be preset.

9 Press TIMER REC ON/OFF.

The power will be turned off and the VCR will enter the standby mode.

Recording will start at the preset turn-on time and will stop when the recording is completed. The power will be turned off automatically.

H-3

At the same time on the same day every week (e.g. every Sunday)

EVERY WEEK

Su

At the same time every day

Su Mo Tu We Th Fr Sa

At the same time every day from Monday to Saturday

Mo Tu We Th Fr Sa

At the same time every day from Monday to Friday

Mo Tu We Th Fr

Every week recording and every day recording

You can preset a timer recording for the same time every day or for the same day every week.
Select the desired setting with JOG so that the appropriate indicator is displayed in step 2 of the procedure in the previous page. H-3

If you want to cancel the every week or every day recording one time only
Press TIMER REC ON/OFF so that the TIMER REC indicator goes off. When you want to begin regular timer recording again, press TIMER REC ON/OFF again so that the indicator is displayed.

If you want to correct the item during setting
Press CLEAR. Only the program which is currently being set will be cancelled. Reset the program.

Why is the cassette holder ejected when TIMER REC ON/OFF is pressed?
- No cassette is inserted.
- The safety tab of the cassette inserted is slid out.
- The tape is at its end.

To make timer recordings of the signals input from audio equipment
See page 28.

Buttons which can be operated while the TIMER REC ON/OFF indicator is displayed
Only CHECK and TIMER REC ON/OFF are operable.

To stop recording during a timer-activated recording
Press TIMER REC ON/OFF. The recording will stop and the power will be turned off. The ■ STOP and ❚❚/▶▶| PAUSE/STILL do not function.

When a timer recording is completed
- The memory for the recording will be erased if it is for only one day, and the timer program number will advance by one.
- When the tape reaches its end before the turn-off time, recording will stop and the power will be turned off. The tape will not be automatically rewound.

When the presettings of your timer-activated recordings overlap

The recording of program 2 will begin before program 1 is finished. The overlapped portion on program 1 will be cut off.

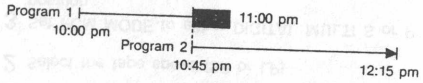

If the turn-on time of two programs is the same

A recording of the program having the lower program number will be made. The memory of the program having the higher number will be cleared.

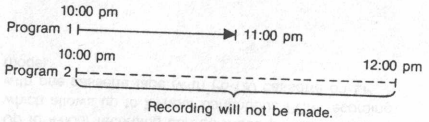

If a power interruption occurs

- If it occurs before a timer recording starts, memory for the timer recordings will be cleared. Reset the clock and preset the timer recordings. A short power interruption of less than approximately 20 seconds does not affect the memory.
- If it occurs during a timer recording, recording will stop and the power will be turned off. If the power interruption was less than approximately 20 seconds, the recording will resume.

H-4

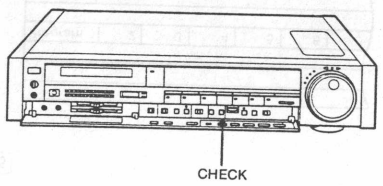

H-5

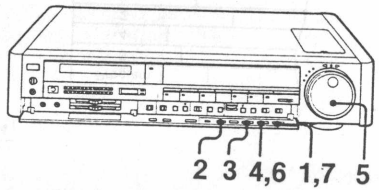

H-6

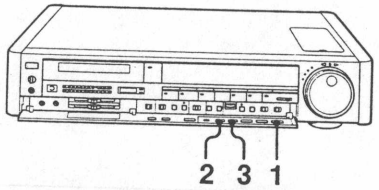

Checking the Timer Settings H-4

Press CHECK. Every time you press CHECK, each program will be displayed in the display window.

Changing the Timer Settings H-5

1 Press TIMER REC ON/OFF so that the TIMER/REC indicator goes off.

2 Press CHECK repeatedly until the program you want to change is displayed.

3 Press TIMER SET.

4 Press NEXT until the item to be changed blinks.

5 Change the setting with JOG.

6 Press NEXT until the counter display appears.

7 Press TIMER REC ON/OFF so that the TIMER/REC indicator appears again.

Cancelling the Timer Setting H-6

1 Press TIMER REC ON/OFF so that the TIMER REC indicator goes off.

2 Press CHECK until the program you want to cancel is displayed.

3 Press CLEAR. The memory for the program will be erased.
If other programs have been preset for recording, press TIMER REC ON/OFF again to reactivate the timer.

Using the VCR Before Timer-Activated Recording Starts

Press TIMER REC ON/OFF so that the TIMER REC indicator goes off.
After using the VCR, press TIMER REC ON/OFF again so that the TIMER REC indicator appears.

Note on the PCM MODE selector
A timer-activated recording for a TV program will not start unless PCM MODE is set to NORM. Blinking of a program number while checking timer settings indicates that PCM MODE is not set to the correct position for that setting.

PCM Recording and Playback — Digital Multi Audio System

I-1

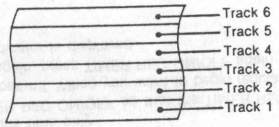

Normally both the video and audio signals are recorded on your video tape. However, in digital multi audio recording the full width of the tape will be divided into six tracks (Track number 1 to 6) and you can record only audio signals on each track in stereo. I-1
Up to 4-hour recording can be made on each track, which allows up to 24-hour continuous PCM recording with one cassette tape (with P6-120 cassette on LP mode).

I-2

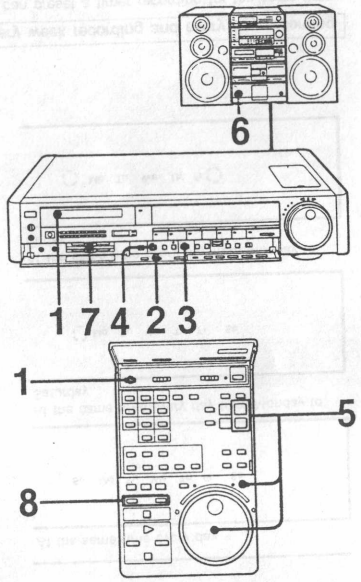

Recording I-2

1 **Insert a cassette.**

2 **Select the tape speed (SP or LP).**

3 **Set PCM MODE to either DIGITAL MULTI S or P position.**
(Either will do.)

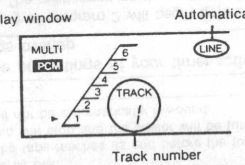

4 **Set LINE to LINE 1 or LINE 2 according to the line inputs connected to an audio system.**

5 **Select the track on which audio recording should be made.**
— Press TRACK/CH +/–.
or
— Press TRACK/CH/INDEX and then turn JOG.

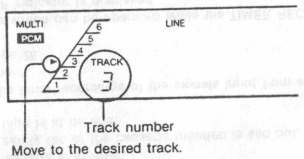

6 **Turn on the power of an audio system and set it to playback mode.**

7 **Adjust REC LEVEL.**
See "Recording level adjustment" on page 28.

8 **Press the ● REC buttons.**

I-3

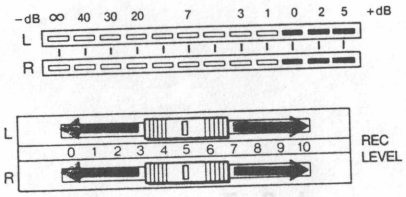

Recording level adjustment I-3

While watching the peak program meter, manually adjust REC LEVEL.

Appropriate recording level

Recording sources with medium or lower frequency signals (e.g. vocals): Adjust so that the first red element lights at the highest signal level (0 dB).
Recording sources with medium or higher frequency signals (e.g. trumpets, treble sound of violin): Adjust so that the element immediately before the first red element lights (–1 to –3 dB).

Notes on the REC LEVEL controls and the peak program meter
- During playback, the peak program meter shows the peak of the recorded level.
- After recording, it is recommended that the REC LEVEL controls are set to the miminum levels for playback. These controls do not affect the volume during playback but noise may appear when stopping playback and this may damage the speakers.

If you make a digital audio recording through a PCM digital audio processor which is not based on the 8 mm PCM standard
PCM recording can be made on 16 bits using the full width of the tape. In this case, set SHARPNESS to the position between the center and SHARP. Select SP tape speed.

I-4

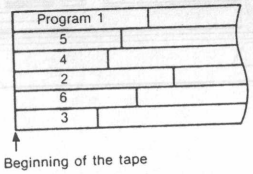

I-5

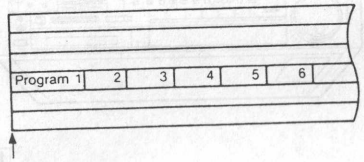

Timer-Activated FM Recording

By connecting an FM tuner with timer setting function (Sony ST-S333ES, ST-S555ES, etc.), you can preset up to six FM programs for recording in PCM digital sound. You can select parallel or series recording by switching the PCM MODE selector.

Parallel recording I-4

Set PCM MODE to DIGITAL MULTI P.
Up to six programs can be recorded from the beginning of any of six separate tracks (e.g. when you want to record different kinds of program separately).
The illustration of an enlarged tape shows that the program 1 to 6 are to be recorded on track number 1 to 6.

Series recording I-5

Set PCM MODE to DIGITAL MULTI S.
Up to six programs can be recorded continuously on one track (e.g. when you want to record a serial program every day).
The illustration of an enlarged tape shows that the program 1 to 6 are to be recorded on track number 3 successively.

I-6

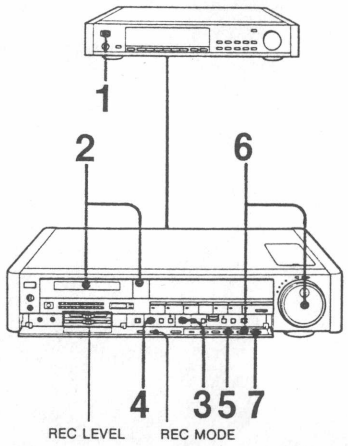

I-7

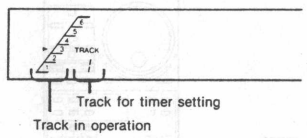

Operation I-6

Before setting the timer
- Make sure the clock is set correctly.
- Set REC LEVEL to the 5 position.
- Select the tape speed (SP or LP).
- Connect an FM tuner to AC OUTLET and to LINE IN 1 or LINE IN 2 AUDIO.

1 Turn on the power of an FM tuner and preset programs.

2 Insert a cassette.

3 Set PCM MODE to DIGITAL MULTI P or S.

4 Set LINE to LINE 1 or LINE 2 according to the line inputs connected to the FM tuner.

5 Press TIMER SET.

6 Set the following items with JOG and NEXT.
- Track number
- Day of the week
- Turn-on time
- Turn-off time

For details, refer to "Timer-activated recording" on pages 22 and 23.

7 Press TIMER REC ON/OFF.
The power will be turned off.

To select the track for timer-activated PCM recording I-7
Both the track in operation and that for timer setting will be shown in the display window. Select the track for timer setting with JOG. To select the playback track, use the CHANNEL/TRACK/INDEX +/– button.

Notes
- In series recording, always select the same track number. If a different track number is selected, all the programs will be recorded on the track which was selected last.
- Timer setting of a TV program recording and a digital audio recording can be made on one tape. However, such setting is not recommended because you have to switch the position of PCM MODE before each recording starts.

I-8

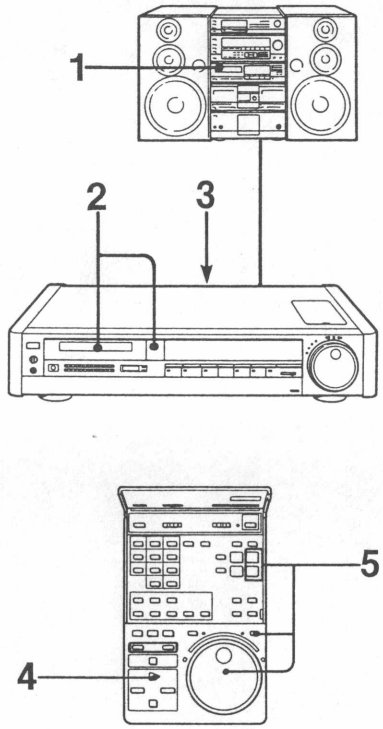

Playback I-8

1 Turn on an audio system and select the video input on an amplifier.

2 Insert a cassette.

3 Set DIGITAL MULTI PLAY at the rear to AUTO.
If no sound is heard with the tape recorded on other VCR, set the selector to MULTI.

4 Press ▶ PLAY.

5 Select the track to be monitored.
— Press TRACK/CH +/–.
or
— Press TRACK/CH/INDEX and then turn JOG.

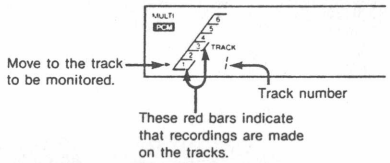

To stop playback
Press ■ STOP.

To stop playback momentarily
Press ❚❚/▶❚. Press again to resume playback.

Notes
- When DIGITAL MULTI PLAY is set to MULTI, all red bars will light regardless of the recorded or unrecorded tracks.
- During playback, it is recommended that the REC LEVEL controls are set to "0" position, otherwise noise may appear and this may damage the speakers when stopping playback.

To Have the Unit Turned Off Automatically — Sleep Timer

J

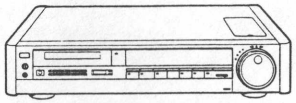

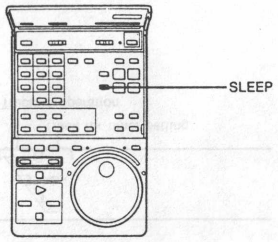

You can set the unit to turn off automatically during recording or playback after a certain time, up to 5 hours, in steps of 30 minutes.

Every time you press SLEEP, the recording/playback duration will change as follows:

0:30 (To turn off 30 min. later) → 1:00 (1 hr.). → 5:00 (5 hrs.)
↑ Current time display ←

Operation J

- Make sure the clock is set correctly.

1 **Press SLEEP during recording or playback.**
The current time display will change to the SLEEP timer duration display.

2 **Press SLEEP repeatedly until the desired recording/playback duration appears in the display window.**
The power will be turned off automatically when recording/playback has been made in preset duration.

To cancel the SLEEP timer function
Press SLEEP repeatedly until the current time display appears.

When the tape reaches the end before the preset duration
It will be automatically rewound but the power will remain on during the preset duration.

If you press SLEEP when the unit is in stop mode
The SLEEP button is operable in stop mode. You can set the sleep timer before starting recording or playback.

Index Function

The desired programs can be easily located by the index signal marked on the tape.

Marking Index Signals

To mark index signals automatically

Set AUTO INDEX inside the upper compartment to ON.
An index signal is automatically marked on a tape when ● REC are pressed or timer-activated recording starts.

You cannot mark an index signal automatically
- on a tape when a recording is started by releasing the recording pause or playback pause mode
- on a tape where the tape speed (SP/LP) has been changed.

To mark index signals manually K-1

K-1

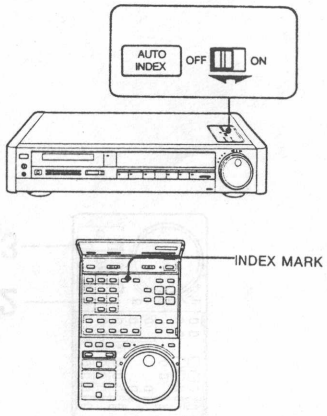

1 Set AUTO INDEX to OFF.

2 During recording or playback, press INDEX MARK at the point where an index signal is to be marked.
The INDEX indicator in the display window blinks while the index signal is being marked.

You cannot mark an index signal by pressing INDEX MARK
- during editing (i.e. EDIT indicator lights).
- while playing back a tape which has no audio/video signals recorded on the PCM track (i.e. the PCM indicator is not displayed).

To mark index signals automatically during digital multi audio recording — Auto index function

Set AUTO INDEX to ON.
During recording, the unit searches for the blank portion between programs (music, etc.) and marks an index signal automatically.

Auto index function will not operate correctly

- when the blank portion between the programs is not detected due to low level signal-to-noise ratio of a program source.
- when the blank portion is less than 3 seconds.
- when an index signal is marked on other portions than blank in some program sources.

The index function can be activated
- when the unit is in PCM recording/playback mode as well as in normal recording/playback mode.
- even when playing back a tape whose safety tab is slid out.

A required interval at which index signals are marked
There should be more than a 2-minute interval between each index signal. If an index signal is marked at a shorter interval, the index signal may not be detected correctly.

When an index signal is being marked during playback
A black noise band will appear at the bottom of the playback picture and the sound will be lowered. However, the recorded signals on the tape are not affected.
If the EDIT button is pressed, a black noise band may disappear but the picture may be distorted.

K-2

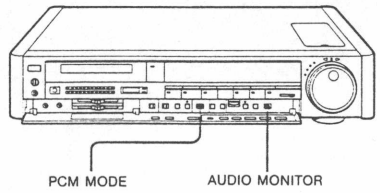

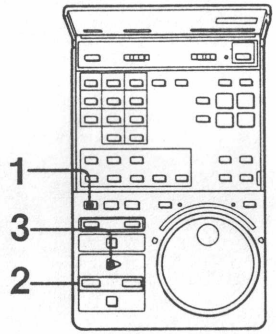

Playing back the beginning of each program in sequence — Index Scan K-2

Before operating
- Set PCM MODE to the appropriate position. See page 29.
- Set AUDIO MONITOR to the appropriate position. See page 13.

1 Press INDEX once when the unit is in stop or playback mode.

2 To scan the previous programs, press ◀◀ REW.
To scan the programs ahead, press ▶▶ FF.
The tape will be rewound or rapidly advanced to the next index signal marked.

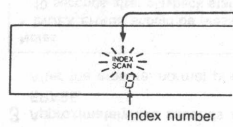

The tape will be played back for approximately 10 seconds, and then rewound or advanced to the next index signal. Each time an index signal is detected, the displayed index number will increase.

3 At the desired program, press ▶ PLAY.
Normal playback of that program will begin.

Notes
- If the tape is rewound to the beginning during index scan or index search, playback will begin automatically.
- If the tape reaches the end during index scan or index search, the tape will stop automatically.
- Index function may not operate correctly with a tape on which both normal and digital multi audio recordings have been recorded.
- When index scan is done using a digital multi audio recorded tape, set PCM MODE to P or S. Setting to NORM will cause sound distortion.

K-3

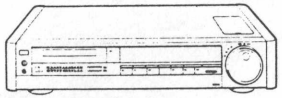

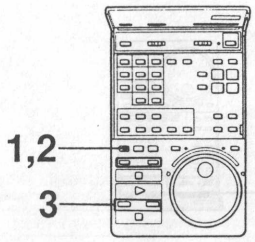

Locating the desired program — Index Search K-3

You can locate the desired program and play it back automatically by designating the number of the index signals to be detected.
Up to the 99th index signal from the present position on the tape can be located.

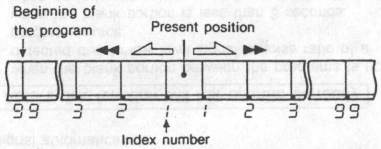

1 Press INDEX once when the unit is in stop or playback mode.

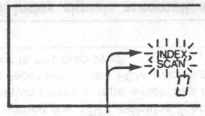

2 Press INDEX repeatedly until the index number of the desired program is displayed.

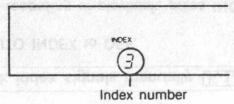

3 To locate the previous program on the tape, press ◀◀ REW.
To locate a program ahead, press ▶▶ FF.
The tape will be rewound or rapidly advanced. Every time an index signal is detected, the displayed number will decrease. When the number reaches 0, playback of your desired program will begin.

To designate larger index numbers

After pressing INDEX (step 1), select an index number by pressing TRACK/CH +/– or turning JOG.

K-4

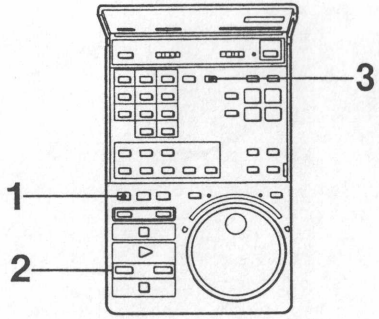

Erasing Index Signals K-4

Erasing while index scanning — To erase the index signals in sequence

1 Press INDEX once.

2 Press ◀◀ REW to rewind the tape or ▶▶ FF to rapidly advance it.
Each time an index signal is detected, the tape will be played back for approximately 10 seconds and then rewound or rapidly advanced.

3 Approximately two seconds after playback has started by the index signal to be erased, press INDEX ERASE.
After the erasure, index scan will resume.
At each index signal to be erased, press INDEX ERASE.
To stop index scanning, press ■ STOP.

Erasing while index search — To erase a particular index signal

1 Press INDEX repeatedly until the number of the index signal to be erased is displayed.

2 Press ◀◀ REW or ▶▶ FF.
The tape will be rewound or rapidly advanced until the designated index signal is located, and playback will begin.

3 Approximately two seconds after, press INDEX ERASE.
After the erasure, normal playback will begin.

Notes
- INDEX ERASE should be pressed within approximately 10 seconds after playback starts.
- The index signal cannot be erased if it is recorded on a portion where the recording tape speed has been changed.
- During erasing index signals, a black noise band will appear at the bottom of the picture and the sound will be lowered. However, this does not affect audio/video recording signals on the tape.

Editing

Transferring the Entire Contents of a Tape to Another

L-1

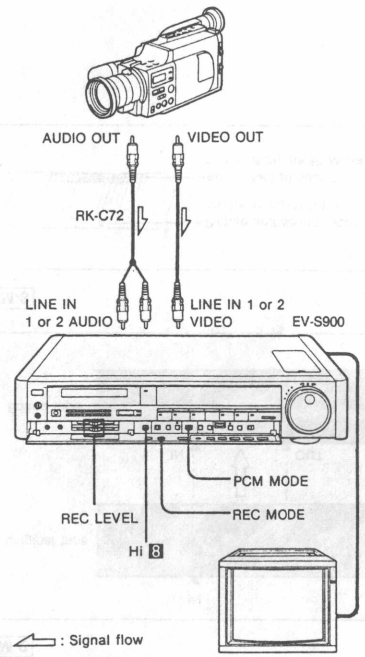

Editing a Home Movie Tape from Another VCR to This VCR [L-1]

Example: Playing back with the 8 mm video camera recorder and recording with this VCR

Connection

Use the supplied video connecting cord (equipped with yellow plugs) for video connection and the optional RK-C72 connecting cord for audio connection.

Preparation

- REC MODE button: SP or LP
- Hi 8 switch: AUTO
- PCM MODE selector: NORM
- REC LEVEL controls: 5

Operation

1 **Press INPUT SELECT so that the LINE indicator appears and set the LINE selector to LINE 1 or 2 according to the line inputs connected to the other VCR.**

2 **Insert cassettes; a recorded cassette into the other VCR and a cassette for recording into this VCR.**

3 **Start playback with the other VCR and start recording with this VCR.**

If another VCR is equipped with an S VIDEO output connector
Connect it to LINE IN 1 S VIDEO of this unit instead of the connection between the phono-type video jacks. Use the supplied S VIDEO connecting cord.

When the audio outputs of another VCR are stereo
Connect the audio L/R jacks on another VCR to the LINE IN AUDIO L/R jacks on this VCR with the supplied audio connecting cord.

L-2

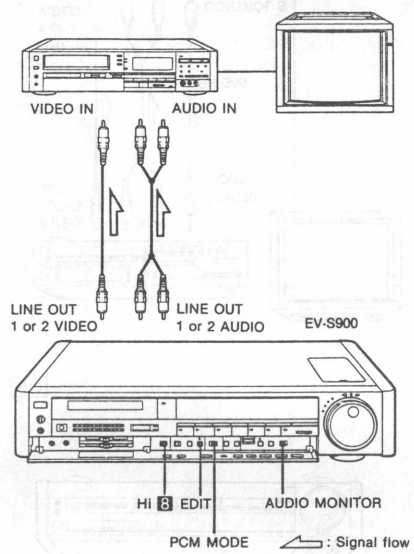

Editing a Home Movie Tape from this VCR to Another VCR [L-2]

Example: Playing back with this VCR and recording with a Beta or VHS format VCR

Connection

Use the supplied video connecting cord (equipped with yellow plugs) for video connection and the supplied audio connecting cord (equipped with red and white plugs) for audio connection. If the audio input of another VCR is monaural, use the optional RK-C72 connecting cord.

Preparation

- Hi 8 switch: AUTO
- PCM MODE selector: NORM
- EDIT button: ON (The EDIT indicator lights.)
- AUDIO MONITOR selector:
  Select the sound to be recorded. (See page 13.)

Operation

1 **Set the input selector on the other VCR to LINE.**

2 **Insert cassettes; a recorded cassette into this VCR and a cassette for recording into the other VCR.**

3 **Start playback with this VCR and start recording with the other VCR.**

Use of the EDIT button
- When editing a tape onto another VCR, press EDIT on this VCR so that the EDIT indicator lights. Loss of picture quality will be minimized. Be sure to turn off the indicator by pressing EDIT after editing.
- The picture and tone quality of a newly edited tapes will be noticeably impaired even if the EDIT button is activated. Avoid repetition of editing tapes.

Picture adjustment during editing
The SHARPNESS control does not function while the EDIT indicator is lit.

Note
Do not connect the same VCR to both the LINE IN and LINE OUT jacks of this VCR. This may cause hum noise.

Various Tape Editing Methods

M-1

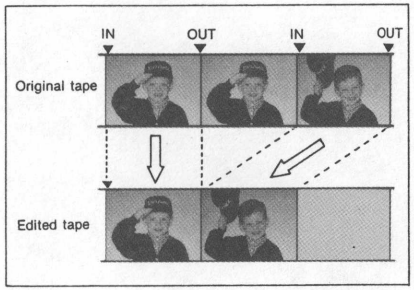

M-2

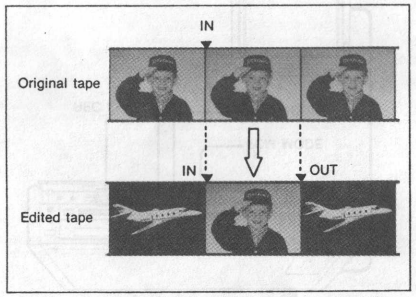

M-3

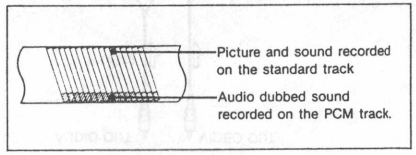

Various methods for easy and accurate tape editing are available with this VCR.
Select the best method according to your purpose and to the video/audio equipment you are using.

Assemble editing M-1

Only the desired portions of an original tape can be edited onto another tape one portion by one.
Decide the start point (IN) and end point (OUT) of editing on the playback VCR. Decide the start point of editing on the recording VCR.

Automatic assemble editing

With this method, editing of the assigned scenes can be carried out automatically in the assigned order. Use a VCR with the automatic assemble editing function as playback VCR or a video editing controller.

Insert editing M-2

A prerecorded portion of a tape can be replaced with a new scene. Decide the start point (IN) and end point (OUT) of editing on the recording VCR. On the playback VCR, decide the start point.

Audio dubbing M-3

The sound recorded on the PCM audio track of a tape can be replaced with a new sound without changing the picture and sound recorded on the standard track.

Notes
- The picture may be distorted at the end of an insert editing.
- The various playback pictures may be distorted when edited from/onto another VCR.

Synchronized Editing from/onto a Sony VCR with the Control Terminal

N-1

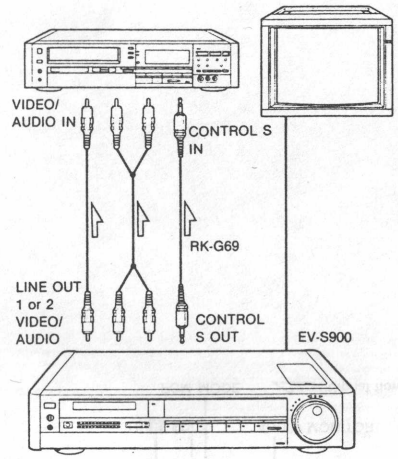

N-2

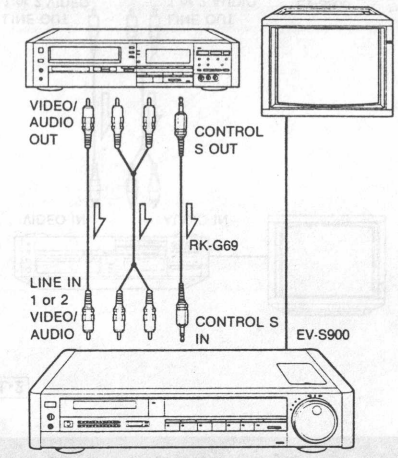

: Signal flow

If another VCR is equipped with a control terminal (CONTROL S, CONTROL L or REMOTE jack), the two VCRs can be operated simultaneously using the SYNCHRO EDIT button.

Connecting a VCR with the CONTROL S IN jack N-1

With this connection, use this unit for playback, and the other VCR for recording.
Use the optional RK-G69 connecting cord for CONTROL S connection.

Connecting a VCR with the CONTROL S OUT jack N-2

With this connection, use this unit for recording, and the other VCR for playback.
Use the optional RK-G69 connecting cord for CONTROL S connection.

To operate another VCR connected to the CONTROL S OUT jack of this VCR with the supplied Remote Commander

Set the command mode selector on the Commander according to the type of another VCR.

To operate a VCR without a command mode selector
VTR1: for a Sony Beta format VCR
VTR2: for a Sony 8 mm format VCR

To operate a VCR equipped with a command mode selector
Set the selector on the Commander to the same command mode as that selected on the VCR.

To operate this VCR with the Commander
Switch the command mode selector on this VCR to a different position from that selected for the other VCR, and set the command mode selector on the Commander to the same position as that selected on this VCR.

Notes on connection
- If another VCR is equipped with both CONTROL L and CONTROL S jacks, CONTROL S connection is recommended.
- If another VCR is equipped with an S VIDEO IN connector, connect it to the LINE OUT 1 S VIDEO connector of this unit instead of the connection between the phono-type video jacks. Use the supplied S VIDEO connecting cord.

N-3

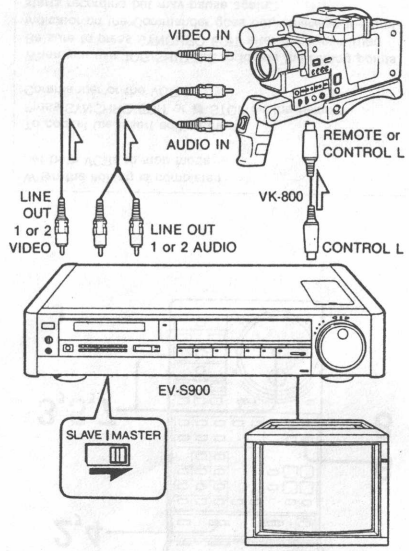

N-4

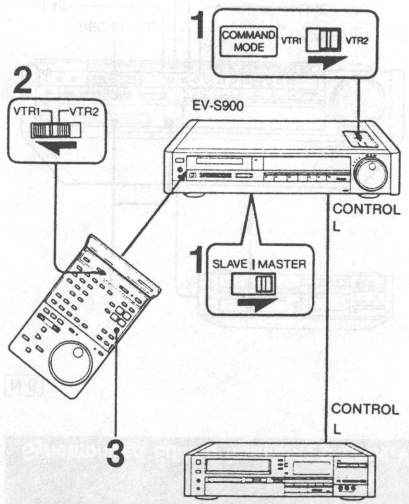

Connecting a VCR or Video Camera Recorder with the REMOTE (or CONTROL L) jack N-3

With this connection, this unit is used for playback and the other VCR for recording.

- Use the optional VK-800 connecting cord for control L connection.
- Be sure to set the SLAVE/MASTER selector on the rear of this unit to MASTER.
  When set to MASTER, the control signal is transmitted through the CONTROL L connector for synchronized editing operation.

Notes

- If the other VCR is monaural, use the optional RK-C72 audio connecting cord.
- If the REMOTE jack of the video camera recorder is stereo mini-mini type, use the optional VK-810 connecting cord.

To operate the VCR connected to the CONTROL L connector with the supplied Remote Commander N-4

1 **Set SLAVE/MASTER to MASTER and COMMAND MODE to VTR2 on this unit.**

2 **Set the command mode selector on the Remote Commander to VTR1.**

3 **Point the Commander toward this unit and press the appropriate tape transport button on the Commander.**
The connected VCR will operate.

To operate this VCR with the Remote Commander
Set the command mode selector on the Commander to VTR2.

Note
The command mode (VTR1, VTR2 or VTR3) of the other VCR is ineffective for the remote control operation through the CONTROL L connector.

N-5

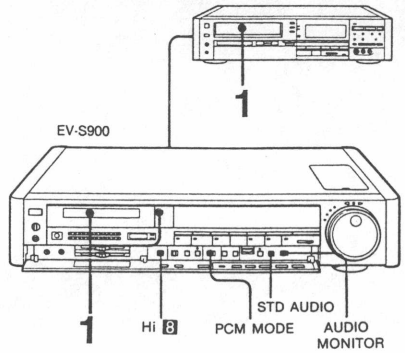

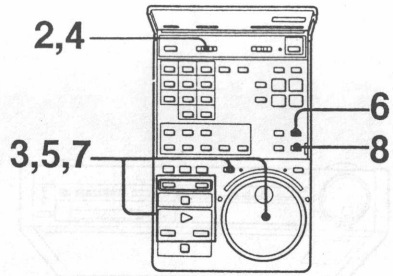

During editing
The COUNTER RESET button does not function.

To cancel the assemble editing mode
Press SYNCHRO EDIT or ■ STOP on the Commander or the VCR.

When assemble editing starts
The EDIT indicator will light automatically and go out when the editing is completed.

Assemble Editing N-5

Use this unit for playback and the other VCR for recording.
For connection, see pages 39 and 40.

Preparation

- Hi 8 switch: AUTO
- PCM MODE selector: NORM
- AUDIO MONITOR selector: Select the sound to be recorded. (See page 13.)

Operation

1 **Insert cassettes; a recorded cassette into this unit, and a cassette for editing into the recording VCR.**

2 **Set the command mode selector on the Commander to the appropriate position for the recording VCR.**
For the setting, see pages 39 and 40.

3 **Locate the point of the tape where you want to start editing on the recording VCR and set it to recording pause mode.**

4 **Set the command mode selector on the Commander to the appropriate position for this VCR.**
For the setting, see pages 39 and 40.

5 **Play back the tape on this unit to locate the end point to be edited and set the unit to playback pause mode.**

6 **Press COUNTER RESET.**

7 **Rewind the tape on this unit to the start point to be edited and set the unit to playback pause mode.**

8 **Press SYNCHRO EDIT.**
The playback starts on this unit and the recording starts on the other VCR.

9 **To edit the next scene, repeat steps 2 to 8.**

When you use JOG/SHUTTLE to locate the editing points
Be sure to press SYNCHRO EDIT after the transmitting indicator goes out, otherwise the unit starts playback but may pause again.

When the editing is completed
Set both VCRs to stop mode.

N-6

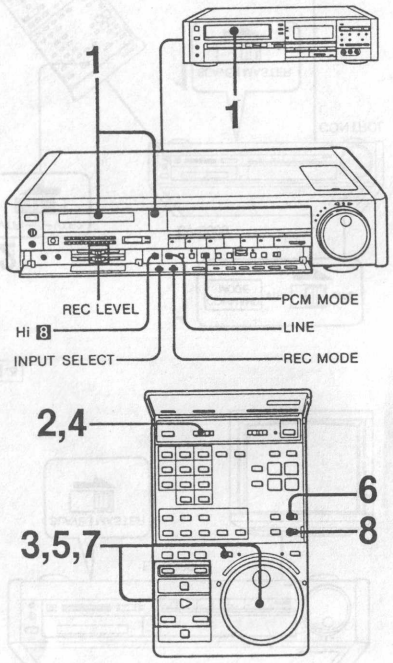

When the editing is completed
Set both VCRs to stop mode.

To concel the insert editing mode
Press SYNCHRO EDIT or ■ STOP on the Remote Commander or the VCR.

When you use JOG/SHUTTLE to locate the editing points
Be sure to press SYNCHRO EDIT after the transmitting indicator on the Commander goes out, otherwise the unit starts recording but may pause again.

During insertion
The COUNTER RESET button does not function.

Insert Editing N-6

Use this unit for recording and the other VCR for playback.
For connection, see pages 39 and 40.

Preparation

REC MODE button: SP or LP
PCM MODE selector: NORM
Hi 8 switch: AUTO
REC LEVEL controls: 5
INPUT SELECT button and LINE selector: Select the line inputs connected to the other VCR.

Operation

1 **Insert cassettes; a cassette for editing into this unit, and an insert source cassette into the playback VCR.**

2 **Set the command mode selector on the Commander to the appropriate position for the playback VCR.**
For the setting, see pages 39 and 40.

3 **Locate the start point to be inserted on playback VCR and set it to playback pause mode.**

4 **Set the command mode selector on the Commander to the appropriate position for this VCR.**
For the setting, see pages 39 and 40.

5 **Play back the tape on this unit to locate the point where the insertion should stop (end point) and set it to playback pause mode.**

6 **Press COUNTER RESET.**

7 **Rewind the tape on this unit to the point where the insertion should start (start point) and set it to recording pause mode.**

8 **Press SYNCHRO EDIT.**
The recording starts on this unit and the playback starts on the other VCR.

When the counter display reaches zero point, indicating that the insertion is completed, this unit will enter recording pause mode and the other VCR will enter playback pause mode.

O-1

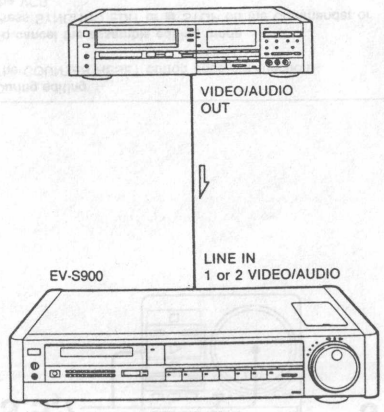

Connection

Using this VCR for recording O-1
For details on connection, see L-1 on page 36.

Using this VCR for playback O-2 (on the next page)
For details on connection, see L-2 on page 37.

Operation

Assemble editing

1 **Insert cassettes; a recorded cassette into the playback VCR, and a cassette for editing into the recording VCR.**

2 **Set the input selector on the recording VCR according to the inputs connected to the playback VCR.**

3 **Play back the tape on the recording VCR to locate the point where editing should start and set it to recording pause mode.**

4 **Play back the tape on the playback VCR to locate the start point to be edited and set it to playback pause mode.**

5 **Press ❚❚ PAUSE to release the pause mode on both VCRs simultaneously.**

6 **Set both VCRs to pause mode at the point where the editing should stop while watching the playback picture.**

7 **To edit the next scene, repeat steps 3 to 6.**

8 **When editing is completed, set both VCRs to stop mode.**

Manual Editing from/onto a VCR Not Equipped with Control Terminal

O-2

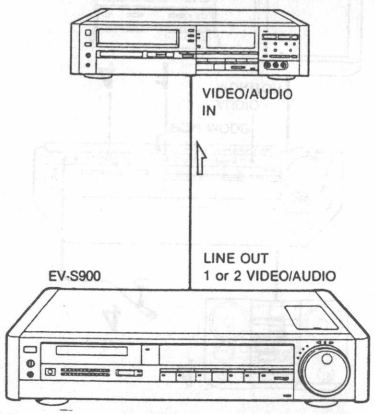

Insert editing

1 Insert cassettes; a cassette for editing into the recording VCR and a insert source cassette into the playback VCR.

2 Set the input selector on the recording VCR according to the inputs connected to the playback VCR.

3 Play back the tape on the playback VCR to locate the start point to be inserted and set it to playback pause mode.

4 Play back the tape on the recording VCR to locate the point where the insertion should stop and press COUNTER RESET.

5 Rewind the tape on the recording VCR to locate the point where the insertion should start and set the VCR to recording pause mode.

6 Press ❚❚ PAUSE to release the pause mode on both VCRs simultaneously.

7 At the counter zero point, set the recording VCR to recording pause mode. Set the playback VCR to playback pause mode.

8 When editing is completed, set both VCRs to stop mode.

Automatic Assemble Editing

P-1

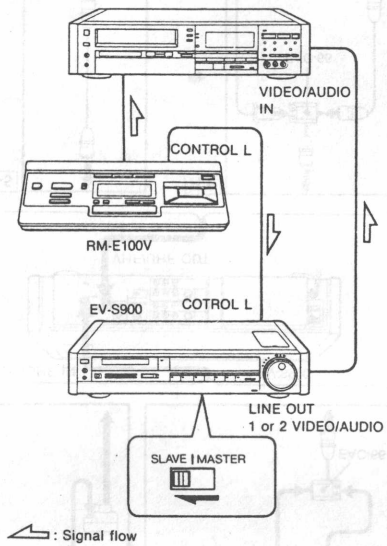

P-2

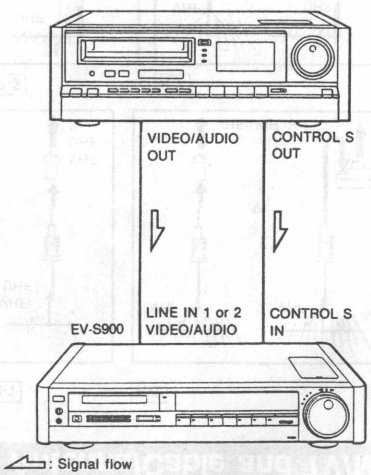

If you use a video editing controller (RM-E100V, etc.) or a VCR with automatic assemble editing function (EDV-9500, etc.), up to 8 scenes of the original tape can be automatically edited onto another tape successively.

Using the Video Editing Controller RM-E100V P-1

Connect another VCR and the controller as illustrated. With this connection you can edit up to 8 scenes of the original tape programmed on the controller onto another tape. For details on operation, refer to the instruction manual furnished with the controller.

Note
Be sure to set SLAVE/MASTER on this VCR to SLAVE. When set to SLAVE, the control signal is transmitted through the CONTROL L connector of the video editing controller to remotely control this VCR.

Using a VCR with Automatic Assemble Editing Function P-2

Make the control S connection besides the audio and video connections.
Use this unit for recording and the other VCR for playback.
You can edit up to 8 scenes of the original tape programmed on the other VCR onto the tape inserted in this unit.
For details, refer to the instruction manual furnished with the other VCR.

Notes
- Pre-roll operation will not be carried out on the EDV-9500.
- With this connection, automatic assemble editing or insert editing using the SYNCHRO EDIT button cannot be done.

Audio Dubbing

Q-1

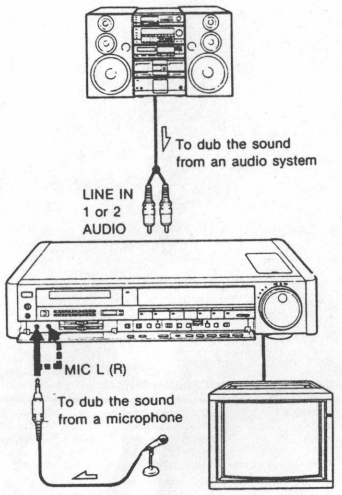

Q-2

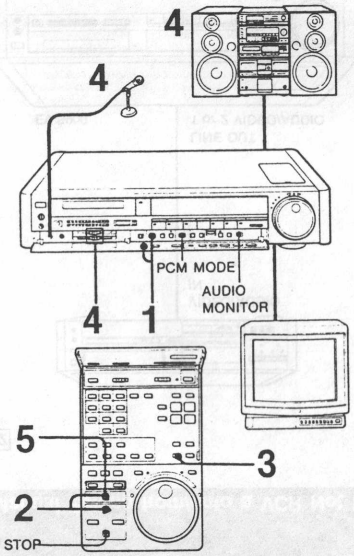

You can additionally record music or narration on the prerecorded tape while watching the playback picture of the tape. Audio dubbed sound will be recorded on the PCM track.

Connection Q-1

Notes on connection
- If only one microphone is used, connect it to the MIC L jack. The sound from the L jack is recorded on the right and left channels of the PCM track while the sound from the R jack is recorded on the right channel only.
- To dub the sound from the audio system, disconnect the microphone from the MIC L/R jacks.
- A plug-in-power microphone cannot be used with this unit.

Operation Q-2

Before operation
- PCM MODE switch: NORM
- AUDIO MONITOR selector: PCM or MIX
- Turn on the TV and select the input for the VCR or select the channel for the VCR.

1 Press INPUT SELECT so that the LINE indicator appears.
When dubbing the sound from the audio system, select LINE 1 or 2.

2 Play back the tape to locate the point where audio dubbing should start and press ❚❚ PAUSE.

3 Press AUDIO DUB.
The AUDIO DUB indicator on the VCR will light.

4 Play back the audio source and adjust REC LEVEL.

5 Press ❚❚ PAUSE again to release playback pause mode.
Audio dubbing will start.

To stop audio dubbing momentarily
Press ❚❚ PAUSE.

To stop audio dubbing
Press ■ STOP.

To dub the sound of a TV program
Press INPUT SELECT to display the TUNER indicator and select the desired channel. Proceed with steps 2 to 5.

Notes
- During dubbing, a black band or picture noise appears in the center and lower portions of the screen, but the recorded picture will not be affected.
- The audio signals prerecorded on the PCM track and index signals will be erased after completion of audio dubbing.
- The audio dubbed sound cannot be played back on a VCR without the PCM recording/playback function or a video camera recorder.

Antenna/Cable and TV/Monitor Connection

R-1 R-2

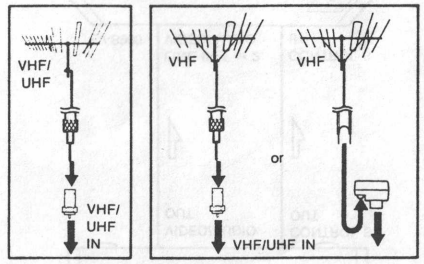

R-3 R-4

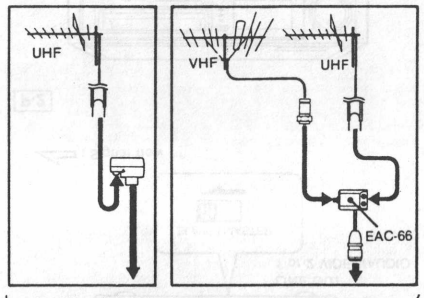

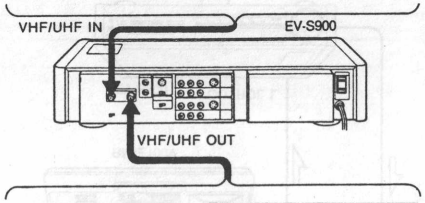

R-5 R-6

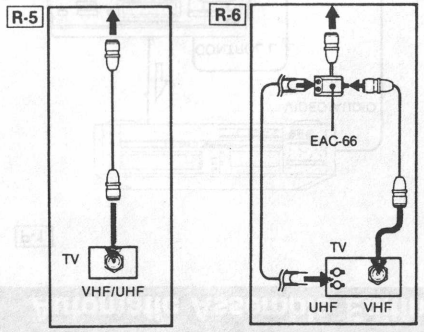

To watch the playback picture on a TV or watch the TV program selected on this VCR, the VCR and the TV receiver have to be connected properly. Disconnect the TV antenna cable from the TV receiver and connect it to this unit.

Notes on making connections
- Turn off all equipments before making connections.
- Do not connect the AC power cord to a wall outlet until all the connections of the VCR and the TV have been completed.
- Make connections firmly. Loose connections may cause a distorted picture.

Connecting a TV without Audio/Video Inputs

Connections between the antenna and this VCR

The connections vary according to the type of the antenna you have.

- R-1 **Combination VHF/UHF antenna (75-ohm coaxial cable)**
  Most combination antennas are equipped with a U/V band separator (signal splitter). Take off the separator.
- R-2 **VHF antenna (75-ohm coaxial cable or 300-ohm ribbon type lead-in)**
- R-3 **UHF antenna (300-ohm ribbon type lead-in)**
- R-4 **Separate VHF and UHF antennas**

- If your antenna end is a 75-ohm coaxial cable, the optional F-type connector should be attached. (See R-7 on next page for attachment.)
- If your antenna end is a 300-ohm ribbon-type lead-in, the supplied antenna connector should be attached. (See R-8 on next page for attachment.)
- If both the separate VHF and UHF antennas are connected, use the optional EAC-66 U/V band mixer. (See R-9 on next page for attachment.)

Connections between this VCR and a TV

The connections vary according to the type of the antenna terminal of your TV.

- R-5 **VHF/UHF antenna terminal**
- R-6 **Separate VHF and UHF antenna terminals**

- If your TV has a VHF/UHF terminal, use the supplied 75-ohm coaxial cable.
- If your TV has separate VHF and UHF terminals, use the optional EAC-66 U/V band separator.

Once the connections explained above have been made, the antenna TV signals, as well as the signal from this VCR, will be fed to the TV and you can view TV programs in the usual way.

Note
Keep the VCR away from the TV, if the display or sound is affected.

Antenna/Cable and TV/Monitor Connection

R-7

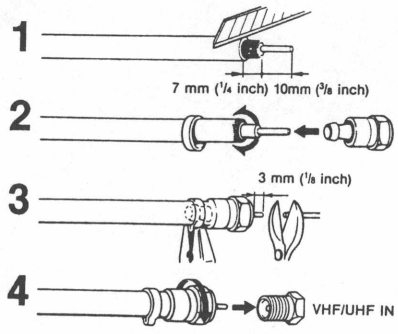

How to attach an F-type connector R-7

1 Strip the cable covering to expose the center conductor.

2 Pass the ring over the cable and fold back the shield. Insert the inner conductor into the F-type connector.

3 Crimp the ring to hold the conductor in place.

4 Connect to the VHF/UHF IN connector.

R-8

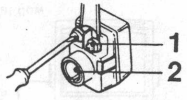

How to attach an antenna connector R-8

1 Wrap the wires of a 300-ohm twin lead-in around the posts and tighten the screws.

2 Connect to the VHF/UHF IN connector.

R-9

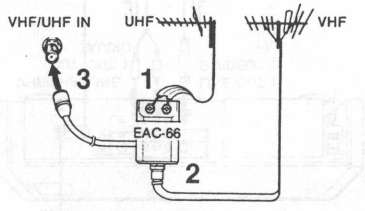

How to attach an EAC-66 U/V band separator (mixer) R-9

1 Wrap the wires of a 300-ohm twin lead-in around the posts and tighten the screws.

2 Plug the F-type connector of the VHF antenna cable into the separator.

3 Connect to the VHF/UHF IN connector.

Caution
Connections between the recorder VHF/UHF OUT connector and the antenna terminals of a TV receiver should be made only as shown in these instructions. Failure to do so may result in operation that violates the regulations of the Federal Communications Commission regarding the use and operation of rf devices.
Never connect the output of the recorder to an antenna or make simultaneous (parallel) antenna and recorder connections at the antenna terminals of your TV.

R-10

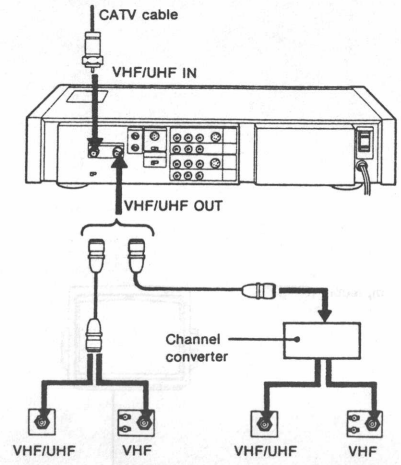

Connecting a CATV cable R-10

Connecting examples are as illustrated, however, we recommend you to consult your cable company to make sure that the cable is properly connected. If your TV is not a cable TV compatible type, the cable TV channel converter should be connected between the VCR and a TV so that you can watch another cable TV program while recording one cable TV program.

Note to CATV system installer in the U.S.A.
This reminder is provided to call the cable TV system installer's attention to Article 820-22 of the NEC that provides guidelines for proper grounding and, in particular, specifies that the cable ground shall be connected to grounding system of the building as close to the point of cable entry as practical.

R-11

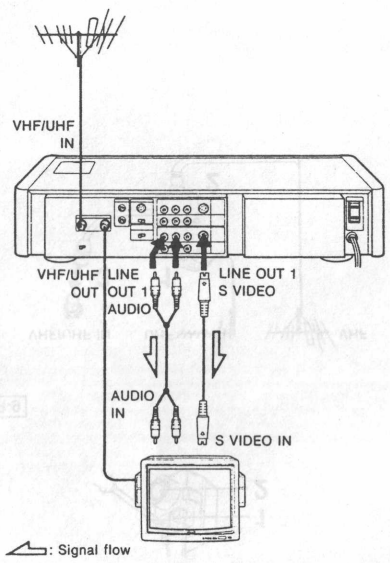

Connecting a TV/Color Monitor Equipped with Audio/Video Inputs R-11

With the following connection the picture and sound quality will be better than that when the TV is connected only to the VHF/UHF OUT terminal on the VCR.

1 **Connect the antenna cable to VHF/UHF IN on the VCR.**

2 **Connect the VHF/UHF OUT to your TV.**
This connection is not required for a color monitor.

3 **Connect LINE OUT 1 S VIDEO to the S VIDEO input on the TV/color monitor with the supplied S VIDEO connecting cord.**

4 **Connect LINE OUT 1 AUDIO to the audio inputs on the TV/color monitor with the supplied audio connecting cord.**

To watch the playback picture
Select the TV/VTR input selector on the TV to VTR.

Selecting the ANTENNA SW selector

Check ANTENNA SW inside the upper compartment after connecting the antenna.

If you connect a TV not equipped with audio/video inputs
Set to AUTO.
- To watch the playback picture, simply press ▶ PLAY. When set to MANUAL, you have to press TV/VTR so that the VTR indicator is displayed.

If you connect a TV equipped with audio/video inputs
Set to MANUAL.
- To watch a TV program, simply select the channel on the TV. When set to AUTO, you have to press TV/VTR so that the VTR indicator disappears.

Notes
- With this connection, the TV/VTR button on this unit does not function.
- With a color monitor, you cannot watch one TV program while recording another.
- Keep the audio/video connecting cords away from the antenna cable, otherwise the picture may be affected.

When a TV/monitor is not equipped with the S VIDEO input connector
Connect LINE OUT 1 (or 2) VIDEO to the video input jack on the TV/monitor with the supplied video connecting cord.

R-12

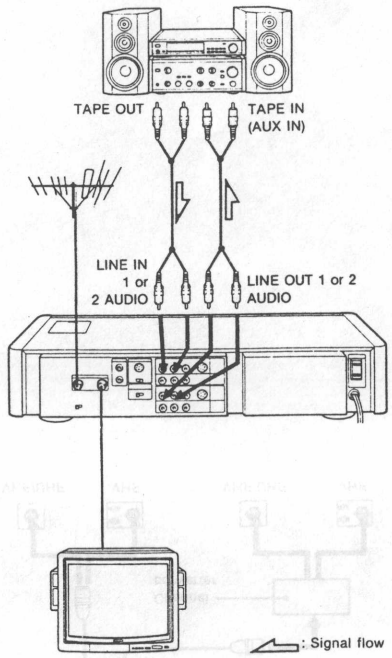

Connecting an Audio System R-12

You can enjoy playback of tapes recorded in stereo or recorded from an audio source such as an FM tuner or CD player in digital multi audio system, when the VCR is connected to your audio system.

For recording connect LINE IN 1 (or 2) AUDIO to the tape outputs on a stereo amplifier with the supplied audio connecting cord.

For playback connect LINE OUT 1 (or 2) AUDIO to the tape inputs or auxiliary inputs on a stereo amplifier with the supplied audio connecting cord (or optionL RK-C74 connecting cord).

Notes
- If the VCR is installed near a tuner or a radio, noise may be heard in AM reception.
- A PCM recorded tape has a wide dynamic range. Before playing back a tape, turn down the volume on the amplifier to avoid damaging the speakers.
- Before connecting or disconnecting the power cord of the VCR, be sure to turn off the connected amplifier.

Adjusting the TV S

S

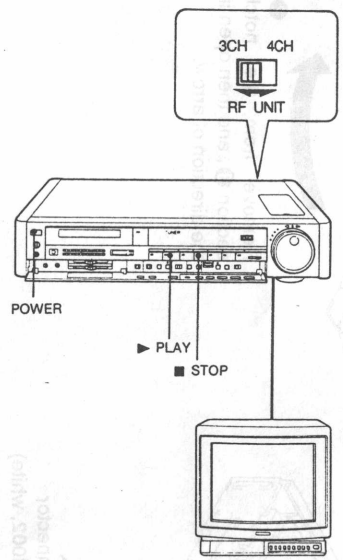

Your TV receiver must be adjusted to receive the signal from your recorder. If you connect a color monitor or a TV equipped with video/audio input jacks, it does not need adjusting.

1 **Set RF UNIT at the rear to 3CH or 4CH whichever channel is not active in your area.**

2 **Press POWER. The indicator lights.**

3 **Insert the cassette.**

4 **Press ► PLAY.**

5 **Turn on the TV.**

6 **Set the TV to either VHF channel 3 or 4 to agree with the RF UNIT setting.**
The playback picture will be displayed on the TV screen. If a picture does not appear on the TV screen or if the display is not clear, fine-tune the channel on the TV. For details on TV channel adjustment, see the instruction manual of the TV receiver.

Check!
Check that the display on the screen changes when you stop the tape by pressing ■ STOP on the recorder. (To eject the cassette, press OPEN/CLOSE.) If the display does not change, repeat the preceding steps.

Now your TV receiver is tuned on the recorder. Whenever you use this VCR, you should set the TV to the channel which you have chosen above.

Setting the Clock

U-1

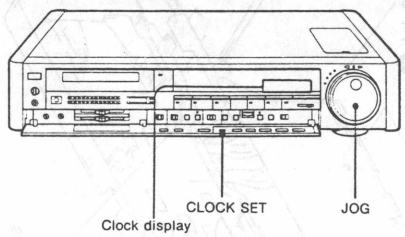

U-2

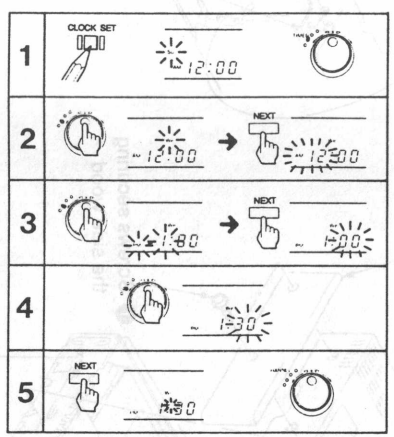

When you connect the AC power cord to a wall outlet, "Su AM12:00" will blink in the display window, indicating that the clock is ready to be set.
The illustration U-1 shows the buttons used for setting the clock.

e.g. To set the clock to 1:30 p.m. on Wednesday U-2

1 **Keep CLOCK SET pressed for a few seconds with a pencil or similar.**
The TIMER of the JOG dial mode indicators lights.

2 **Set the day of the week with JOG, and then press NEXT.**

3 **Set the hour with JOG, and then press NEXT.**
AM12:00 = midnight
PM12:00 = noon

4 **Set the minute with JOG.**

5 **Press NEXT at the same time as an announced time signal for accurate setting.**
The clock will start. The dots of the colon will alternately blink every 30 seconds. The CHANNEL of the JOG dial mode indicators lights.

To reset the clock
Press CLOCK SET for a few seconds. Reset the clock, following the preceding steps 2 to 5.

When "Su AM 12:00" blinks in the display window
There has been a power interruption for more than 20 seconds or the power cord has been disconnected for more than 20 seconds. In this case, reset the clock.

SECTION 2
DISASSEMBLY

2-1. REMOVAL OF UPPER AND LOWER CABINETS

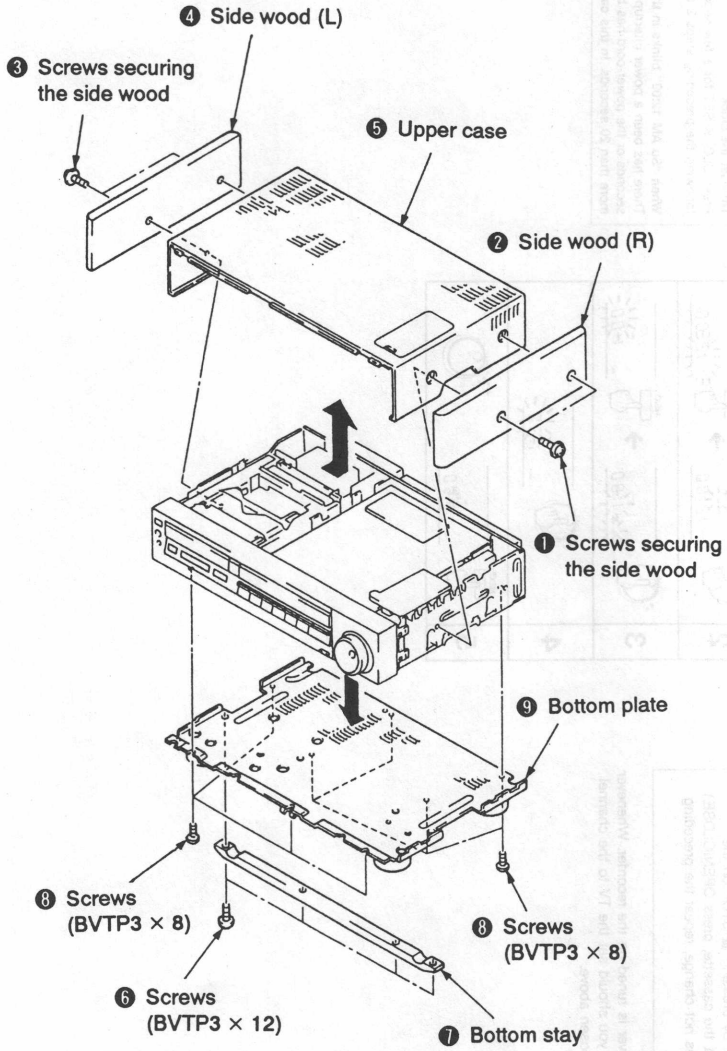

2-2. REMOVAL OF FRONT PANEL

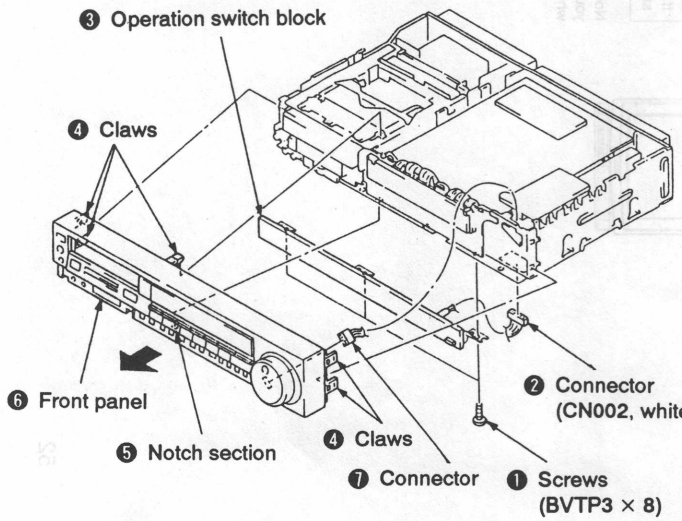

2-3. OPENING OF THE FT-37 BOARD

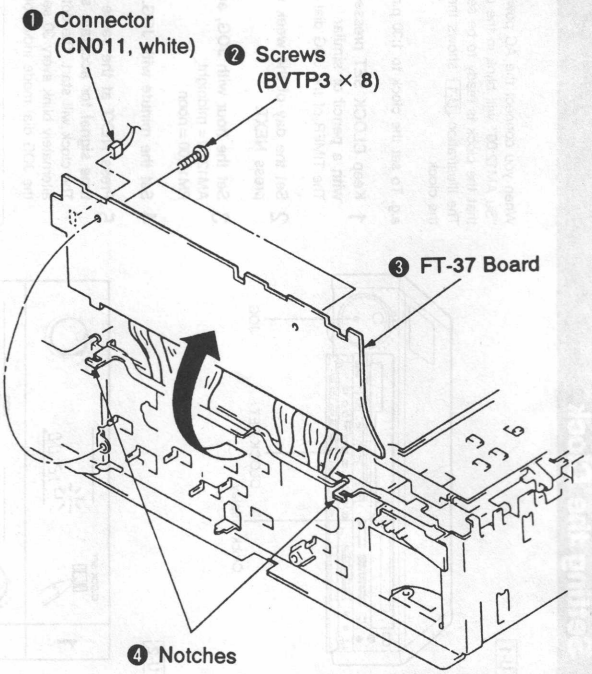

Remove from the two notch sections ❹, and then open in the direction of arrow.

2-4. OPENING OF THE PW-62 BOARD

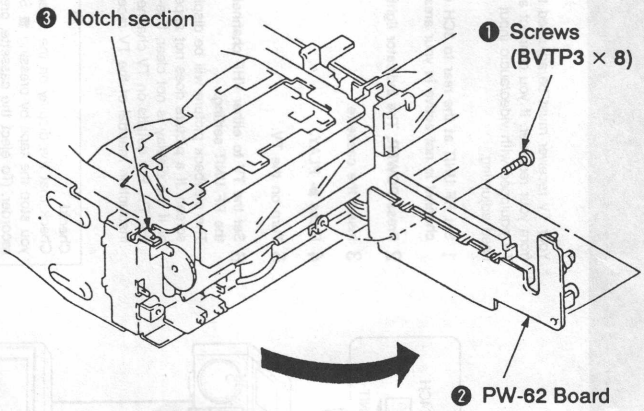

Remove from the notch section ❸, and then open in the direction of arrow.

2-5. REMOVAL OF THE PR-12 BOARD

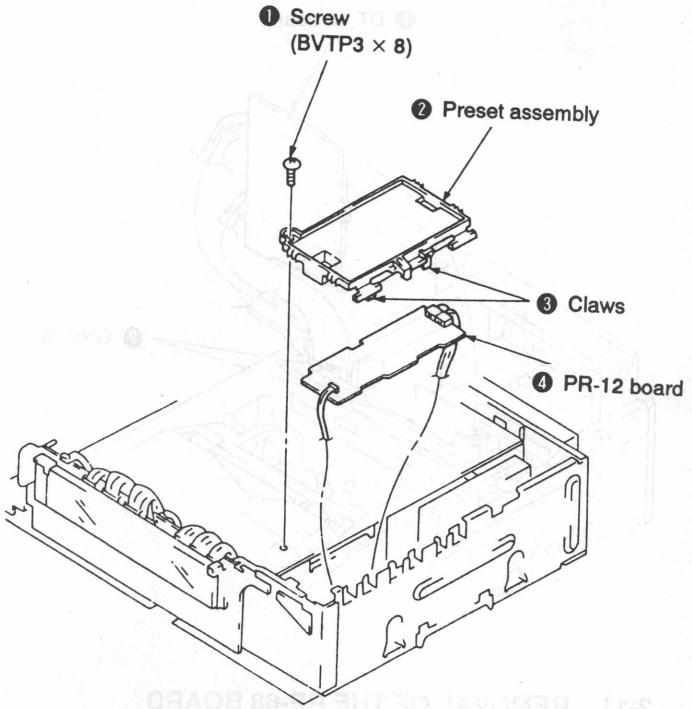

2-6. OPENING OF THE SP-7 BOARD

1) After the preset assembly is removed according to "2-5. REMOVAL OF THE PR-12 BOARD", perform as shown below.

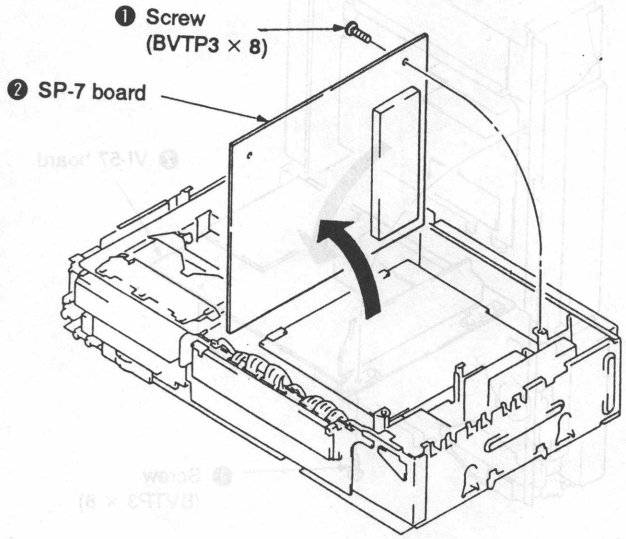

2-7. REMOVAL OF THE TS-49 AND TU-82 BOARDS

1) After the SP-7 board is opened according to "2-6. OPENING OF THE SP-7 BOARD", perform as shown below.

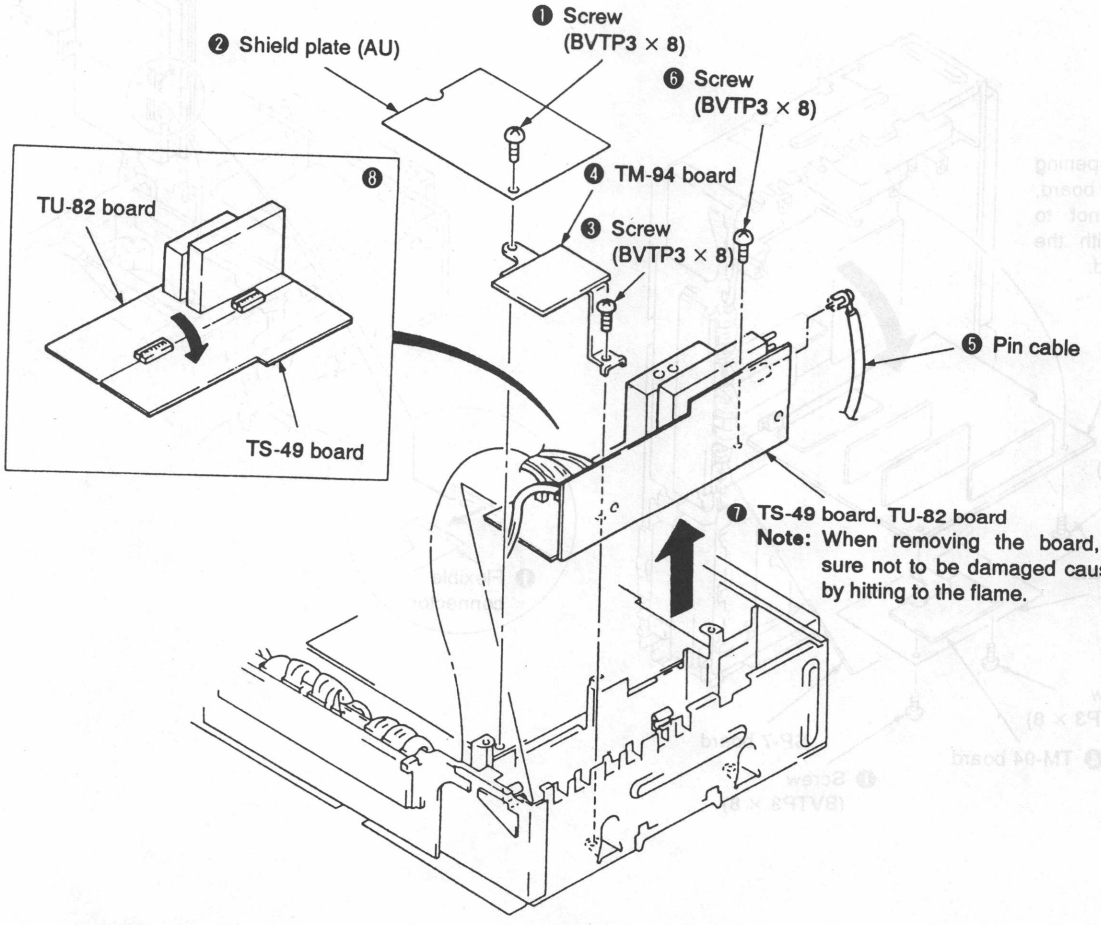

2-8. OPENING OF THE VI-57 BOARD

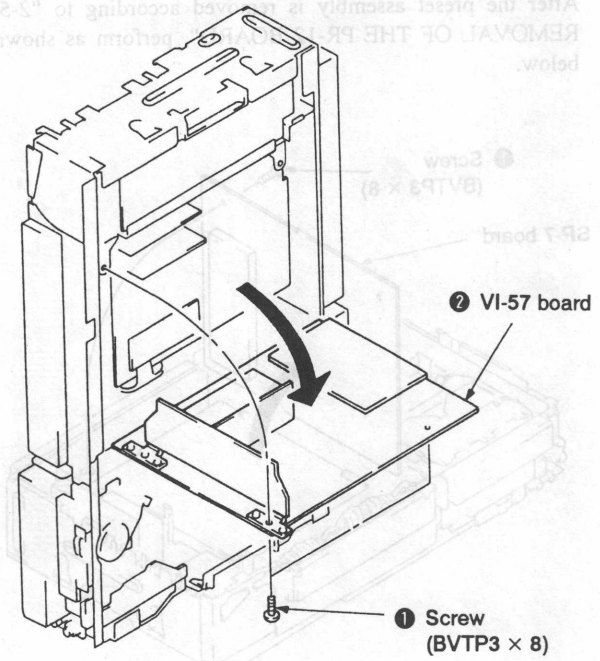

2-9. OPENING OF THE AU-54 BOARD

1) After the SP-7 board is opened according to "2-6. OPENING OF THE SP-7 BOARD", perform as shown below.

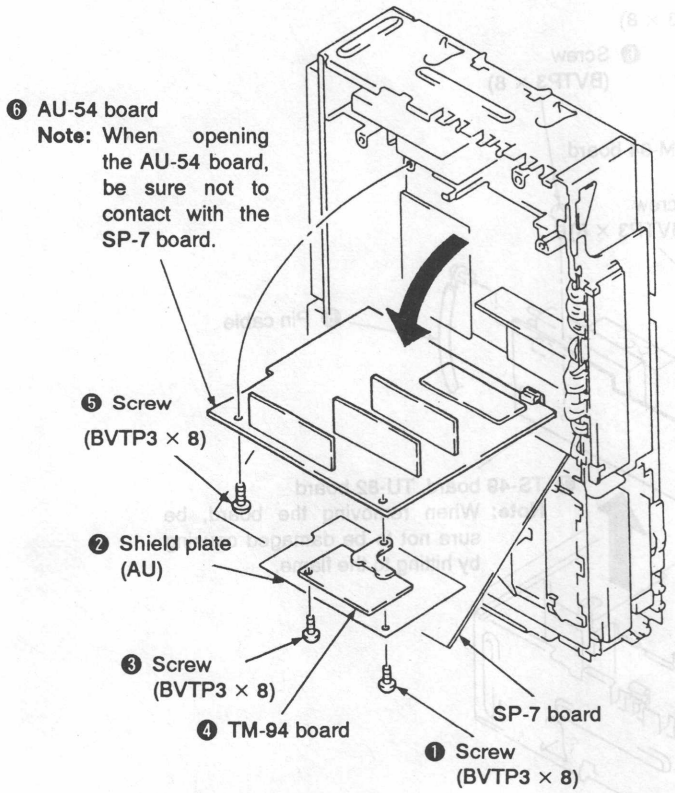

2-10. REMOVAL OF THE DT-63 BOARD

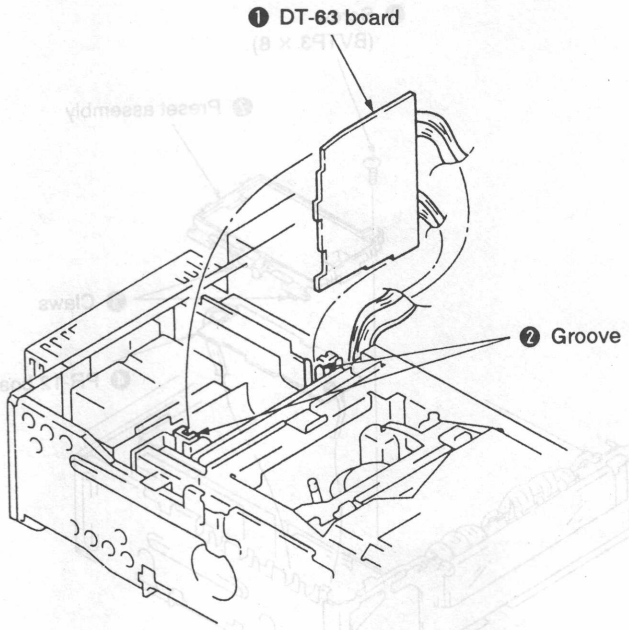

2-11. REMOVAL OF THE RP-68 BOARD

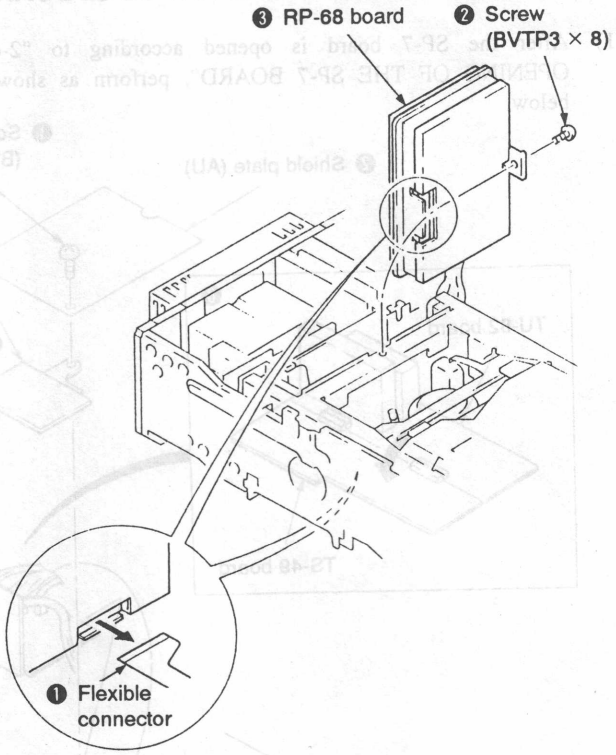

2-12. REMOVAL OF THE DR-35 BOARD

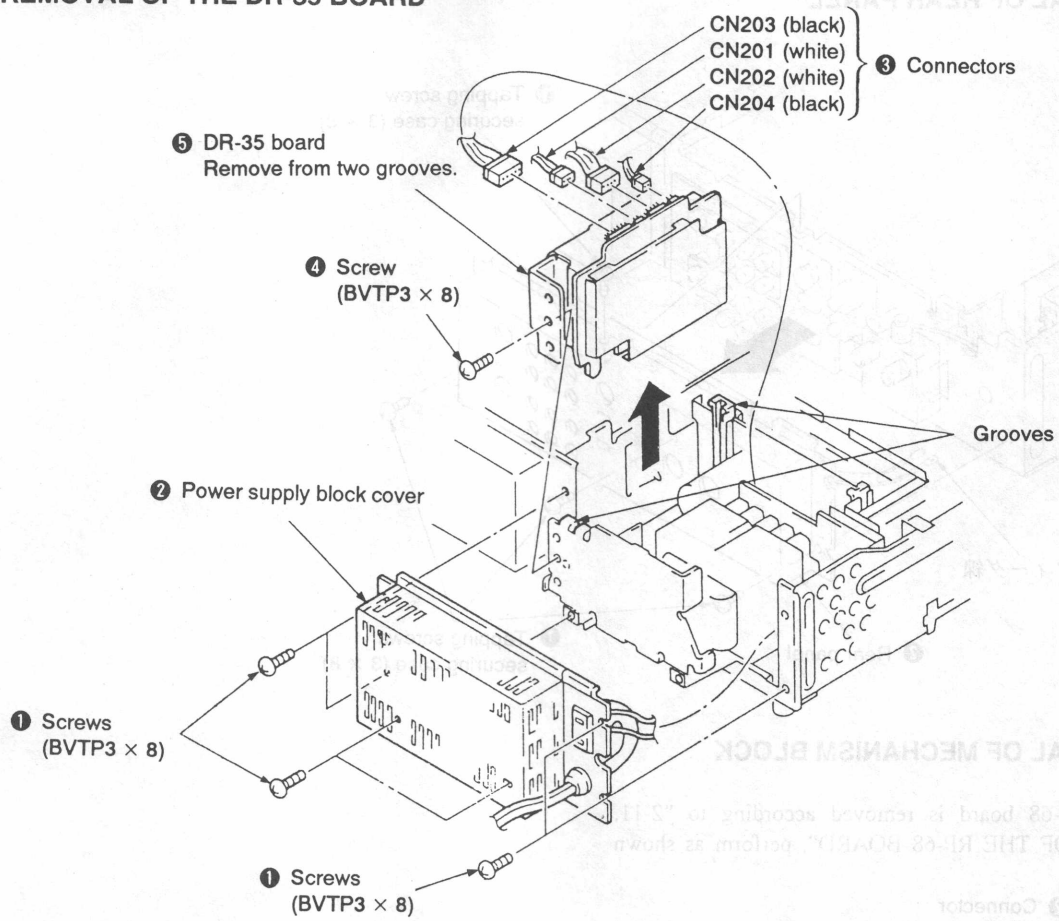

2-13. REMOVAL OF POWER TRANSFORMER (DS-15 BOARD)

1) After the DT-63 board is removed according to "2-10. REMOVAL OF THE DT-63 BOARD", perform as shown below.

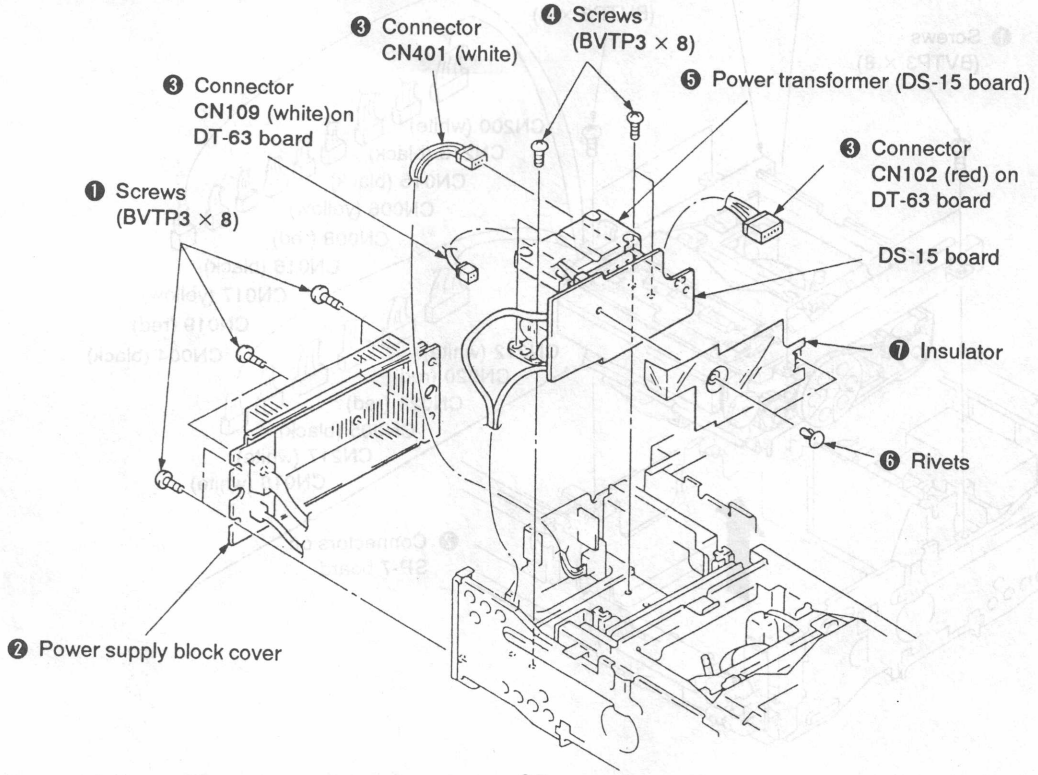

2-14. REMOVAL OF REAR PANEL

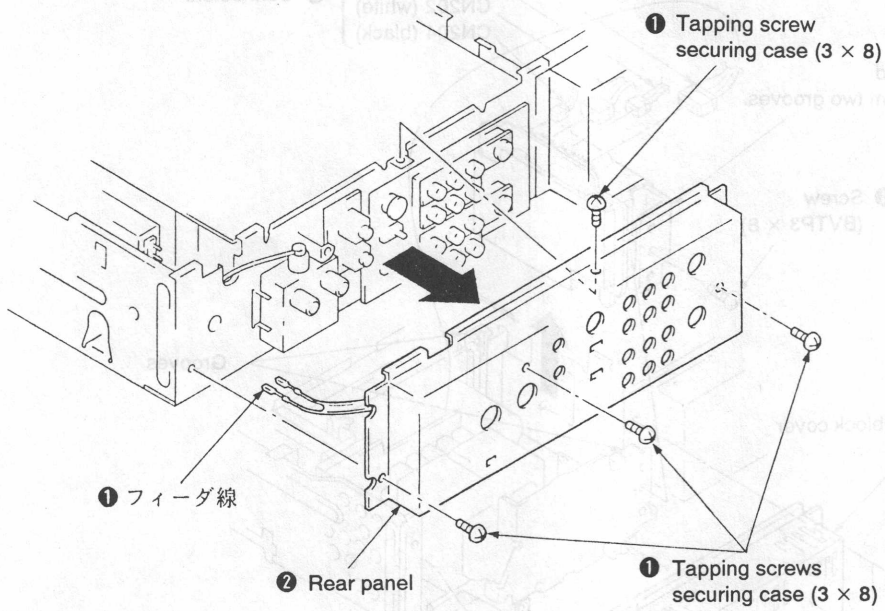

2-15. REMOVAL OF MECHANISM BLOCK

1) After the RP-68 board is removed according to "2-11. REMOVAL OF THE RP-68 BOARD", perform as shown below.

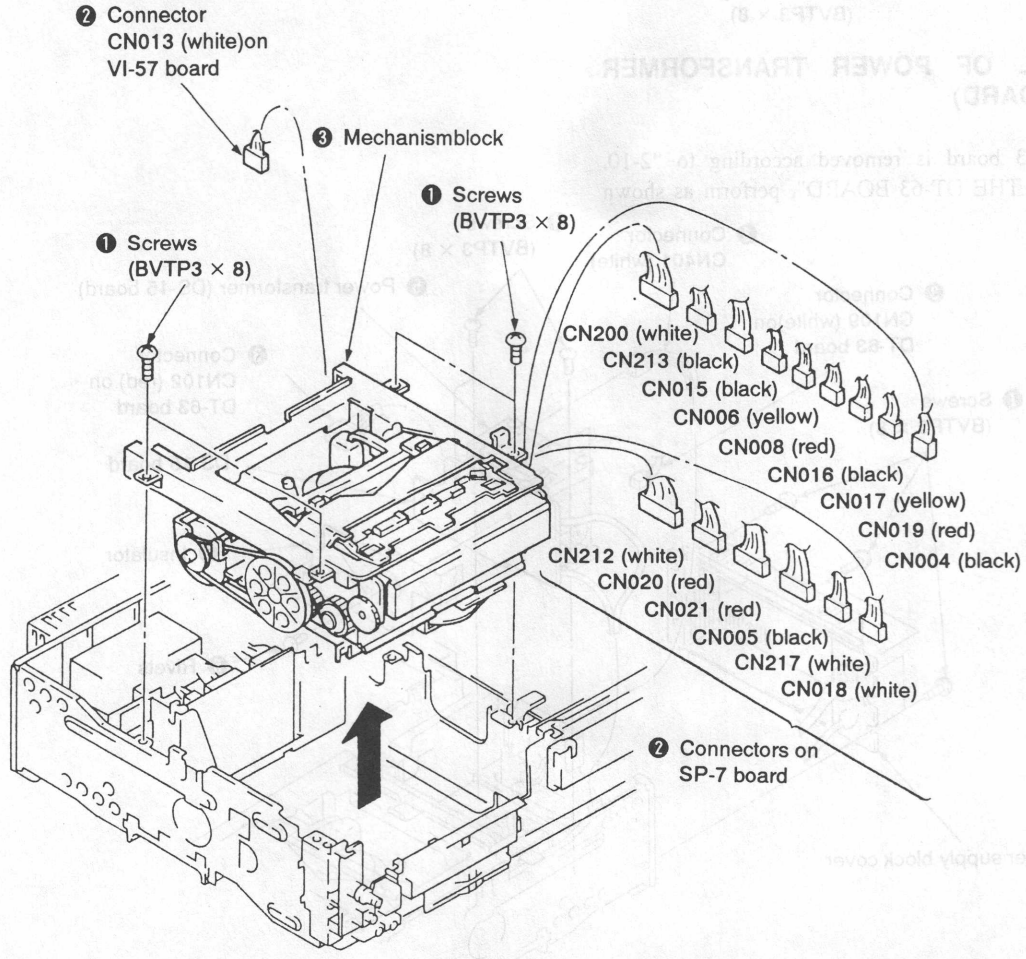

2-16. REMOVAL OF LS CASSETTE COMPARTMENT ASSEMBLY

1) After the mechanism block is removed according to "2-15. REMOVAL OF MECHANISM BLOCK", perform as shown below.

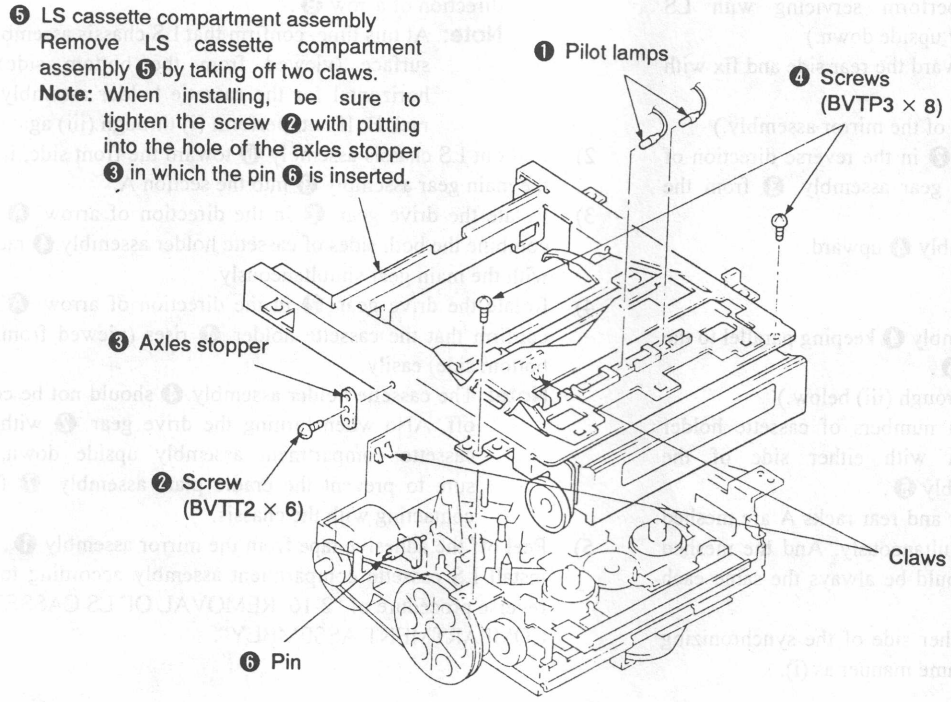

2-17. EJECTING WITHOUT APPLYING THE POWER

1) Insert the precision screwdriver ❷ into the motor pulley ❶, turn it about 180 ° in the direction of arrow Ⓐ as shown below.
   Note: As the cassette compartment is locked at this time, the pulley may not turn. Never turn the screwdriver forcibly.
2) Insert the precision screwdriver ❷ into the section A as shown below, push the cassette compartment lock ❸ in the direction of arrow Ⓑ to unlock the cassette compartment.
3) Insert the precision screwdriver ❷ into the motor pulley ❶ again, turn it in the direction of arrow Ⓐ until EJECT operation is completed.

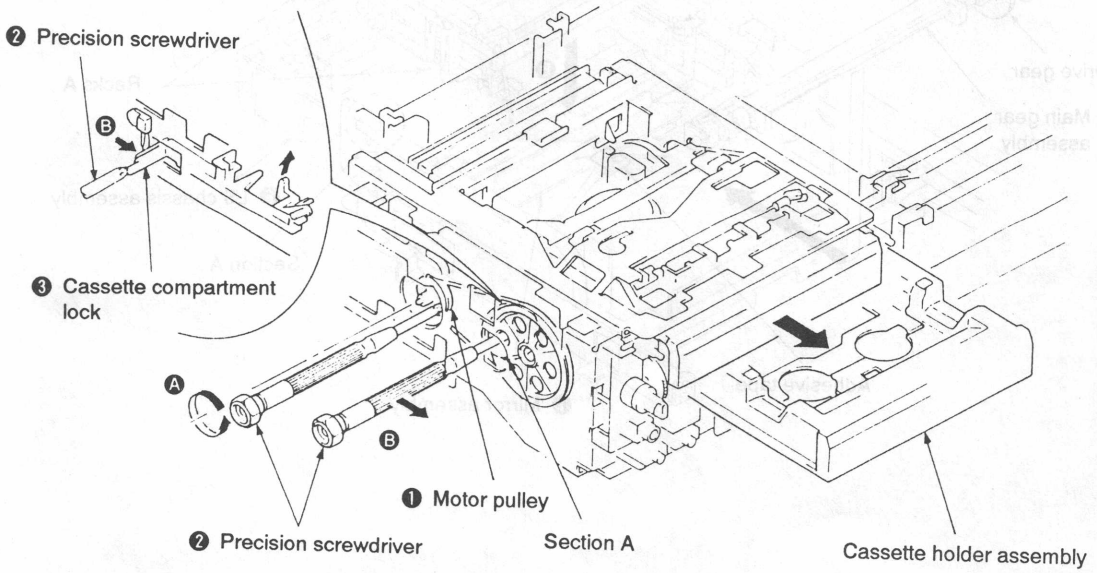

2-18. REPLACEMENT OF CASSETTE HOLDER ASSEMBLY

2-18-1. Removal

1) Remove LS cassette compartment assembly according to "2-16. REMOVAL OF LS CASSETTE COMPARTMENT ASSEMBLY". (Hereafter, perform servicing with LS cassette compartment assembly upside down.)
2) Tilt the mirror assembly ❶ toward the rear side and fix with an adhesive tape.
   (Be sure not to break the claws of the mirror assembly.)
3) While rotating the drive gear ❷ in the reverse direction of arrow Ⓐ, remove the main gear assembly ❸ from the section A.
4) Remove the cassette holder assembly ❹ upward.

2-18-2. Installation

1) Install the cassette holder assembly ❹ keeping parallel to the synchronizing gear assembly ❺.
   (For details, described in (i) through (iii) below.)
   (i) Mesh a half of all teeth numbers of cassette holder assembly ❹ racks A with either side of the synchronizing gear assembly ❺.
   Note: At this time, front and rear racks A are meshed with the gear simultaneously. And the meshed teeth numbers should be always the same each other.
   (ii) Mesh rack A with the other side of the synchronizing gear assembly ❺ in the same manner as (i).
   (iii) After confirming that the number of teeth combined of four racks A and the synchronizing gear assembly ❺ is the same, push the cassette holder assembly ❹ in the direction of arrow Ⓑ.
   Note: At this time, confirm that LS chassis assembly ❻ surface (viewed from the bottom side) is horizontal for the cassette holder assembly ❹ rack B. If not, perform (i) through (iii) again.
2) Pull out LS chassis assembly ❻ toward the front side, insert the main gear assembly ❸ into the section A.
3) Rotate the drive gear ❷ in the direction of arrow Ⓐ and combine the both sides of cassette holder assembly ❹ rack B with the main gear simultaneously.
4) Rotate the drive gear ❷ in the direction of arrow Ⓐ and confirm that the cassette holder ❹ rises (viewed from the bottom side) easily.
   Note: The cassette holder assembly ❹ should not be come off. Also when turning the drive gear ❷ with LS cassette compartment assembly upside down, be sure to prevent the cradle plate assembly ❼ from contacting with the chassis.
5) Peel off the adhesive tape from the mirror assembly ❶, and install LS cassette compartment assembly according to the reverse procedure of "2-16. REMOVAL OF LS CASSETTE COMPARTMENT ASSEMBLY".

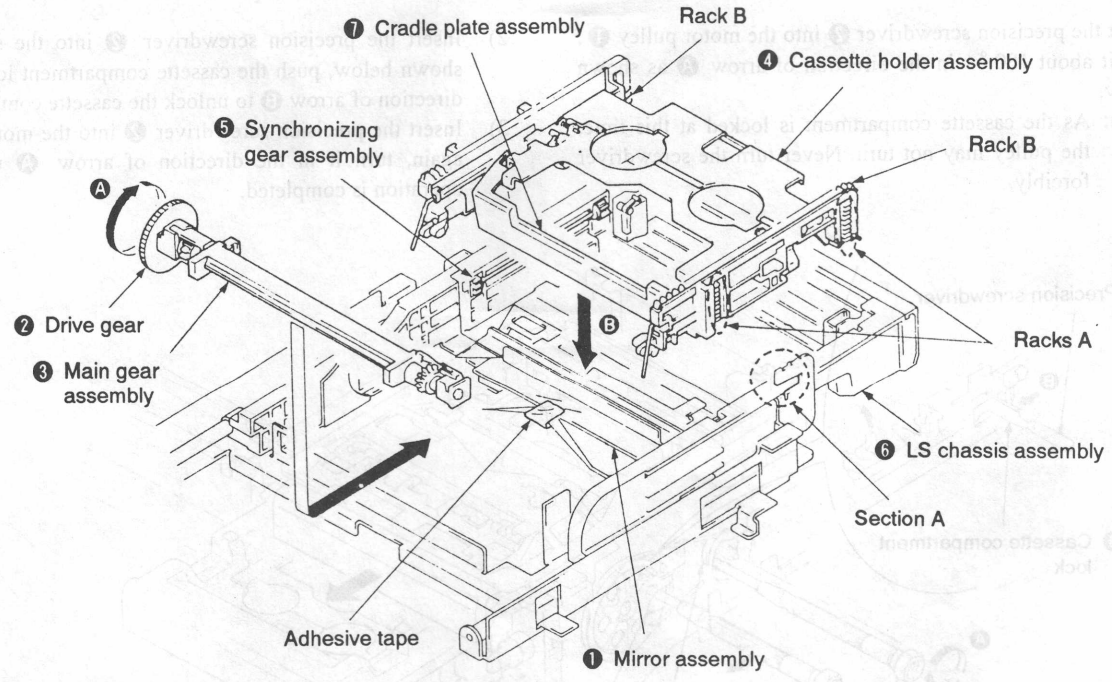

2-19. INTERNAL VIEWS

– Upper side –

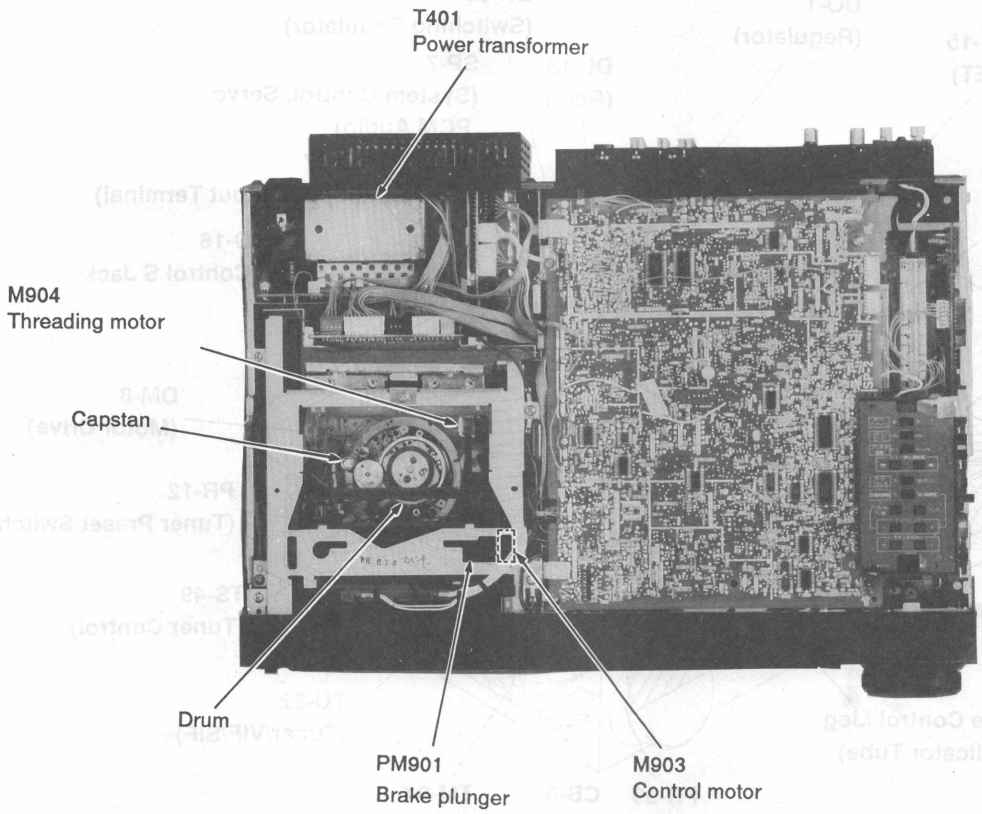

– Bottom side –

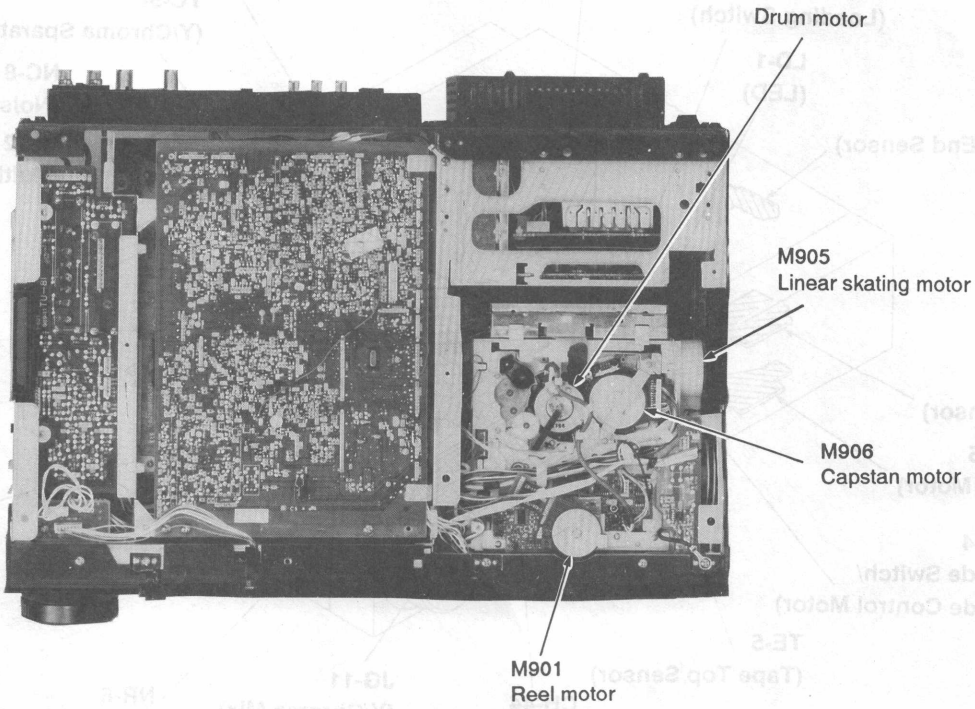

SECTION 3
DIAGRAMS

3-1. CIRCUI BOARDS LOCATION

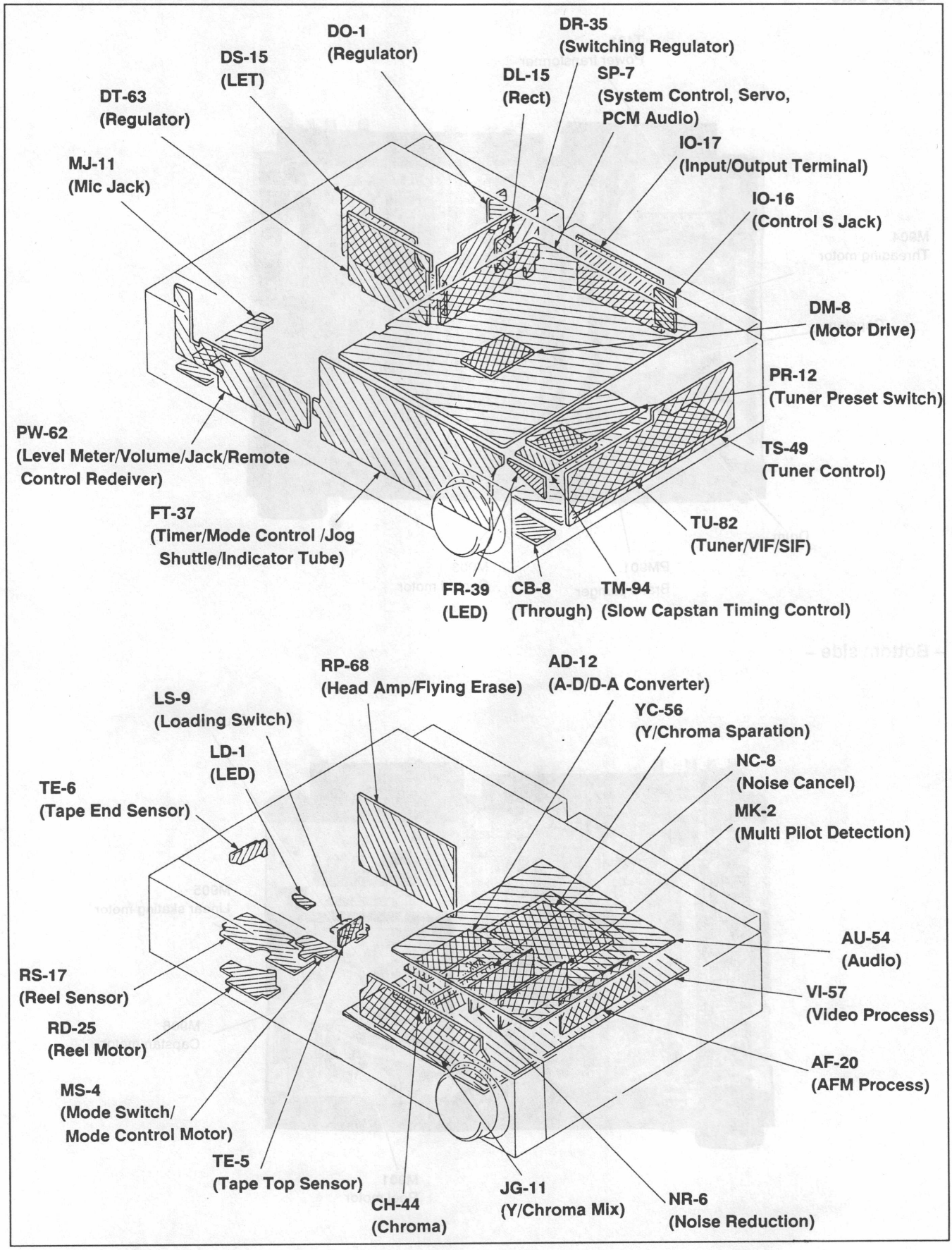

3-2. OVERALL BLOCK DIAGRAM

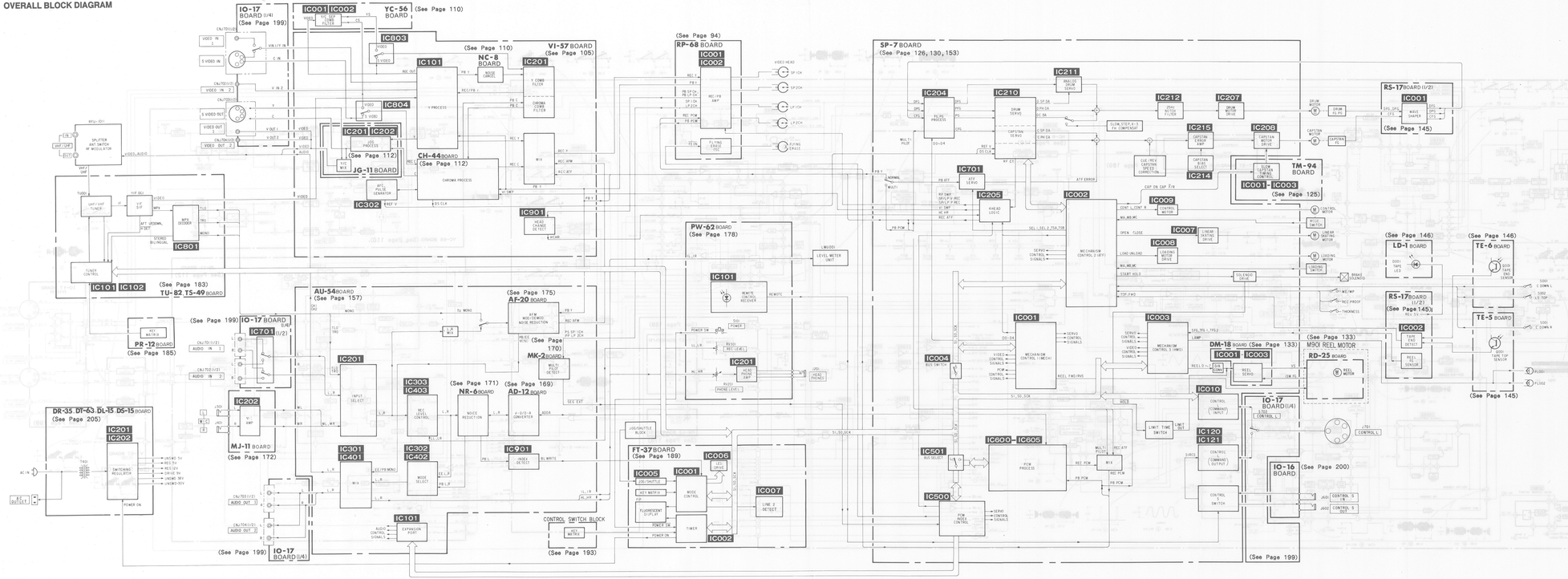

3-3. VIDEO BLOCK DIAGRAM

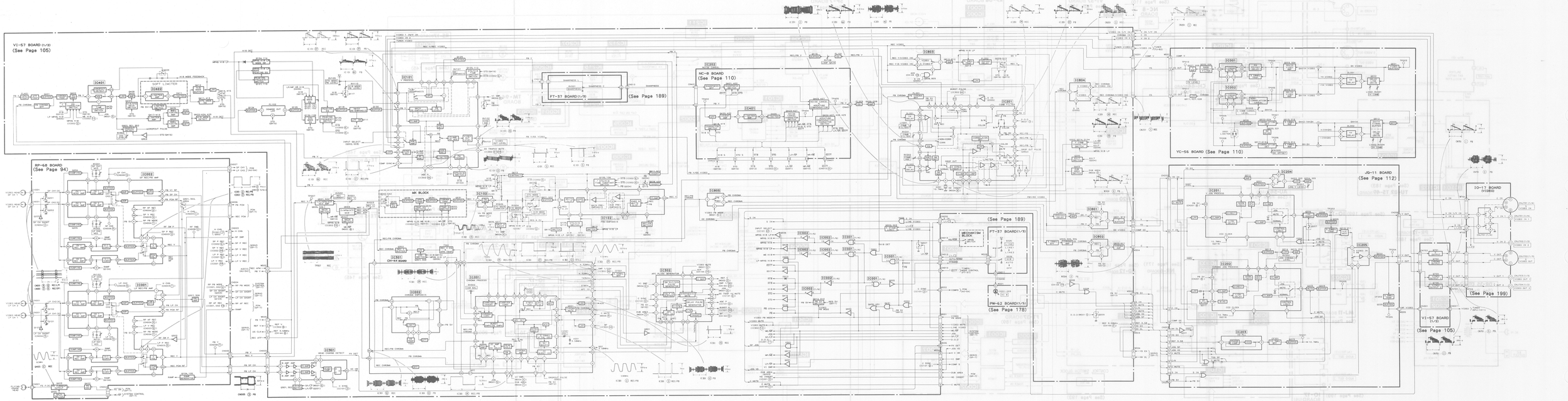
VI-S7 BOARD (1/2)
(See Page 105)
RP-68 BOARD
(See Page 94)
NC-8 BOARD
(See Page 110)
FT-37 BOARD (1/3)
(See Page 189)
YC-S6 BOARD (See Page 110)
JG-11 BOARD
(See Page 112)
IO-17 BOARD
(VIDEO)
(See Page 199)
VI-S7 BOARD
(1/2)
(See Page 105)
FT-37 BOARD(1/3)
(See Page 189)
PW-62 BOARD(1/3)
(See Page 178)
MECHANISM BLOCK
(See Page 189)
NC BLOCK
CH-64 BOARD
SOFT LIMITER
CHROMA SUPPRESS
CHROMA PROCESS
CHROMA DCR PROCESS
DELAY LINE
SYNC GENERATOR
SERVO
SYSTEM CONTROL
VIDEO MUTE
CHROMA LEVEL DETECT
DROPOUT PULSE
INPUT SELECT
VIDEO/Y/C
VIDEO
CHROMA
SYNC
REC
PB
REC/PB
REC CHROMA
PB CHROMA
REC VIDEO
PB VIDEO
REC SYNC
PB SYNC
REC/PB CHROMA
REC/PB VIDEO
REC/PB SYNC
SUPERIMPOSE
SUPERIMPOSE O
SUPERIMPOSE I
SUPERIMPOSE O
SUPERIMPOSE I
SUPERIMPOSE O
SUPERIMPOSE I

3-4. SERVO BLOCK DIAGRAM

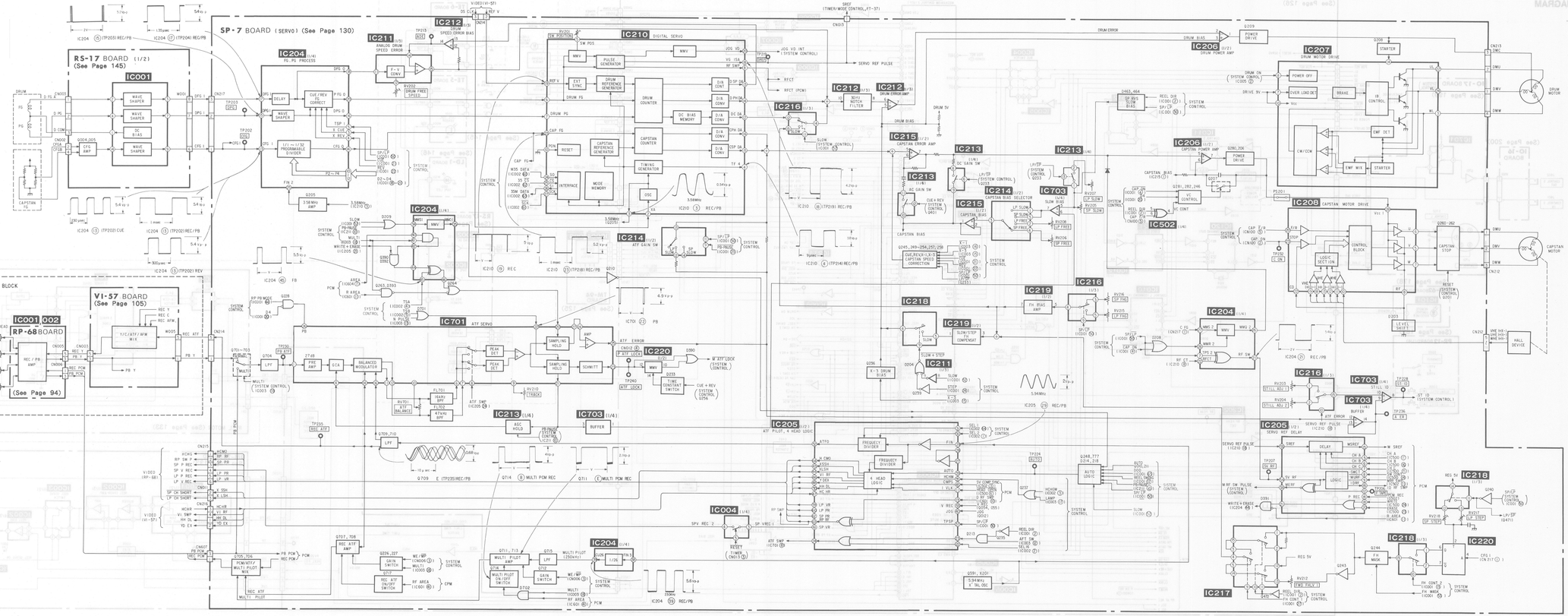

3-5. SYSTEM CONTROL DIAGRAM

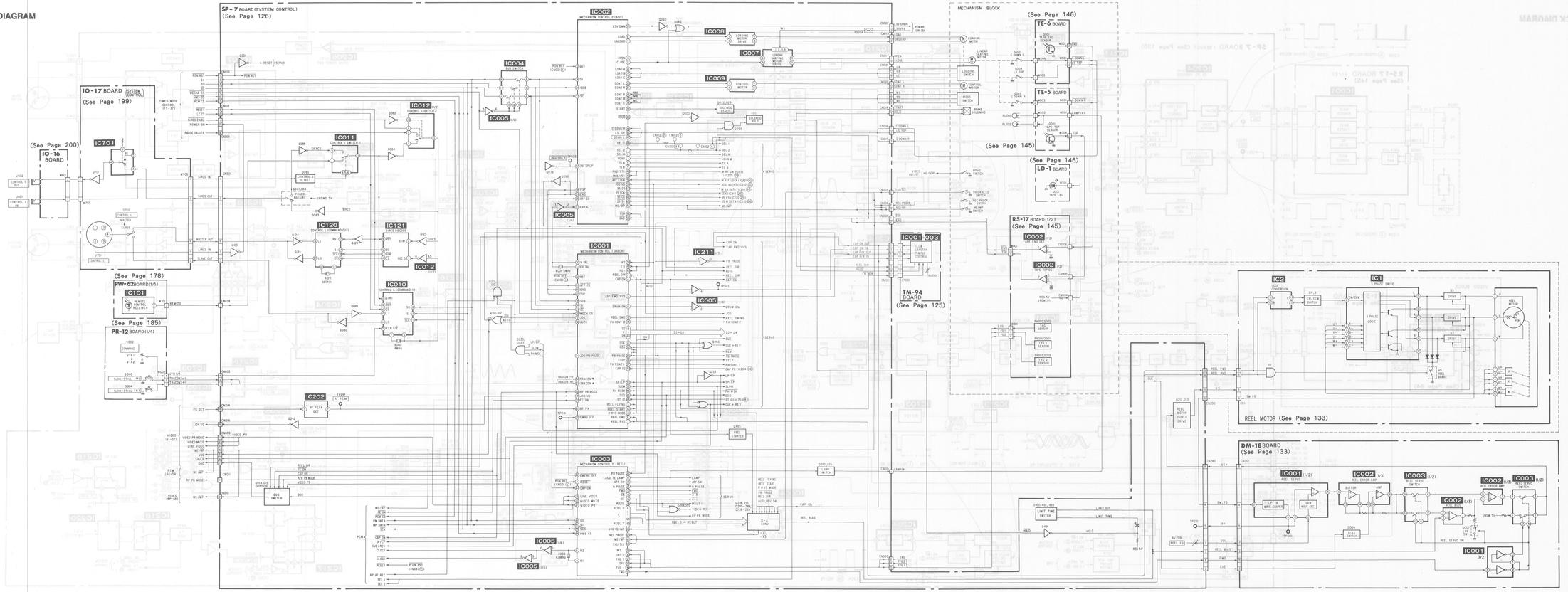

3-6. SYSTEM CONTROL — VIDEO BLOCK INTERFACE

Signal name	I/O	Pin No.	STOP	FF	REW	REC	REC • PAUSE	AUDIO DUB	AUDIO DUB PAUSE	PB	PB • PAUSE	× 1	− × 1	× 2	− × 2	CUE (× 9)	REV (− × 7)	SLOW (1/5, 1/10)	SLOW (-1/5, -1/10)	FWD INDEX SEARCH	RVS INDEX SEARCH
VIDEO PB	O	Pin ㉑ of IC003	L	L	L	L	L	H	H	H	H	H	H	H	H	H	H	H	H	H	H
VIDEO MUTE	O	Pin ⑳ of IC003	L	L	L	L	L	L	L	L	L	L	L	L	L	L	L	L	L	L	L
JOG	O	Pin ⑨ of IC003	L	L	L	L	L	H	H	L	H	H	H	H	H	H	H	H	H	H	H
DOD	O	Pin ⑬ of IC003	L	L	L	L	L	H	L	L	L	L	H	H	H	H	H	L	H	H	H
ME/$\overline{MP}$	O	Pin ③ of IC006	"L" when using MP tape or MPHG tape.																		
SP/$\overline{LP}$	O	Pin ㊿ of IC001	"H" when recording in SP mode, or playing back in SP mode.																		
JOG VD	O	Pin ㊺ of IC001	"H"					$\overline{VD}$ pulse		"H"	$\overline{VD}$ pulse										
LINE VIDEO	O	Pin ⑲ of IC001	According to input selecting. TUNER··· "L", LINE or SIMUL··· "H".																		
HG/$\overline{NOR}$	O	Pin ① of CN013 on VI-57 board	"L" when using MP tape or ME tape.																		
RP PB MODE	O	Pin ㊹ of IC001	H	H	H	L	L	H	H	H	H	H	H	H	H	H	H	H	H	H	H

3-7. SYSTEM CONTROL — SERVO (CAPSTAN MOTOR) BLOCK INTERFACE

Signal name	I/O	Pin No.	STOP	FF	REW	REC	REC • PAUSE	AUDIO DUB	AUDIO DUB PAUSE	PB	PB • PAUSE	× 1	− × 1	× 2	− × 2	CUE (× 9)	REV (− × 7)	SLOW (1/5, 1/10)	SLOW (-1/5, -1/10)	FWD INDEX SEARCH	RVS INDEX SEARCH
$\overline{CAP\ ON}$	O	Pin ④ of IC001	H	H	H	L	H	L	H	L	H	L	L	L	L	L	L	*1	*1	L	L
CAP $\overline{FWD}$/RVS	O	Pin ⑤ of IC001	L	L	L	L	L	L	L	L	L	L	H	L	H	L	H	*1	*1	L	H
D0~D4	O	Pins ⑯ to ㉑ of CN001	"1"	"1"	"1"	"1"	"1"	"1"	"1"	"1"	"1"	"1"	"1"	"2"	"2"	"9"	"7"	"1"	"1"	*2	*2
$\overline{CUE}$	O	Pin ㉑ of IC001	H	H	H	H	H	H	H	H	H	H	H	H	H	L	H	H	H	H	H
$\overline{REV}$	O	Pin ㉒ of IC001	H	H	H	H	H	H	H	H	H	H	H	H	H	H	L	H	H	H	H
$\overline{PB\ PAUSE}$	O	Pin ㉓ of IC001	H	H	H	H	H	H	L	H	L	H	H	H	H	H	H	L	L	H	H
$\overline{-\times 1}$	O	Pin ⑱ of IC003	H	H	H	H	H	H	H	H	H	H	L	H	H	H	H	H	H	H	H
$\overline{-\times 3}$	O	Pin ⑮ of IC003	H	H	H	H	H	H	H	H	H	H	H	H	L	H	H	H	H	H	H

D4 MSB
D0 LSB
Decimal

*1. Pulse output
*2. NTSC "25" to "24"

3-8. SYSTEM CONTROL — SERVO (DRUM MOTOR) BLOCK INTERFACE

Signal Name	I/O	Pin No.	STOP	FF	REW	REC	REC • PAUSE	AUDIO DUB	AUDIO DUB PAUSE	PB	PB • PAUSE	× 1	− × 1	× 2	− × 2	CUE (× 9)	REV (− × 7)	SLOW (1/5, 1/10)	SLOW (-1/5, -1/10)	FWD INDEX SEARCH	RVS INDEX SEARCH
$\overline{DRUM\ ON}$	O	Pin ⑧ of IC001	H	L	L	L	L	L	L	L	L	L	L	L	L	L	L	L	L	L	L
STEP	O	Pin ㉔ of IC001	L	L	L	L	L	L	L	L	L	L	L	L	L	L	L	*1	*1	L	L
FH CONT1	O	Pin ㉗ of IC001	L	L	L	L	L	L	L	L	L	L	L	L	L	L	L	*1	*1	L	L
FH CONT2	O	Pin ⑬ of IC001	L	L	L	L	L	L	L	L	L	L	L	L	L	L	L	*1	*1	L	L
SLOW	O	Pin ㊷ of IC001	L	L	L	L	L	L	L	L	L	L	L	L	L	L	L	H	H	L	L
$\overline{FH\ MASK}$	O	Pin ㊸ of IC001	H	H	H	H	H	H	H	H	H	H	H	H	H	H	H	*1	*1	H	H

3-9. SYSTEM CONTROL — SERVO (REEL MOTOR) BLOCK INTERFACE

Signal Name	Mode I/O	Mode Pin No.	STOP	FF	REW	REC	REC • PAUSE	AUDIO DUB	AUDIO DUB PAUSE	PB	PB • PAUSE	×1	−×1	×2	−×2	CUE (×9)	REV (−×7)	SLOW (1/5, 1/10)	SLOW (-1/5, -1/10)	FWD INDEX SEARCH	RVS INDEX SEARCH	
REEL FWD	O	Pin ⑥ of IC001	L	H	L	H	L	H	L	H	L	H	L	H	L	H	L	∗1	∗1	H	L	
REEL RVS	O	Pin ⑦ of IC001	L	L	H	L	L	L	L	L	L	L	H	L	H	L	H	∗1	∗1	L	H	
$\overline{\text{CUE}}$	O	Pin ㉑ of IC001	H	H	H	H	H	H	H	H	H	H	H	H	H	L	H	H	H	H	H	
REEL DIR	O	Pin ② of IC001	H/L	L	H	L	L	L	L	L	H/L	L	H	L	H	L	H	L	H	L	H	
REEL FLYING	O	Pin ③ of IC001	Normally "L". "H" pulse when shifting STOP → FF/RVS mode.																			
$\overline{\text{REEL START}}$	O	Pin ⑩ of IC001	Normally "H". "L" pulse when shifting STOP → FF/RVS mode.																			
R RVS MODE	O	Pin ⑪ of IC001	L	L	L	L	L	L	L	L	L	L	L	L	L	L	L	L	L	L	L	
REEL SWG	O	Pin ⑫ of IC001	Normally "L". "H" pulse when changing FORWARD ⇄ REVERSE running direction.																			
REEL 0~7	O	Pins ① to ⑥, ⑬ and ⑭ of IC003	"70"	"96"	"96"	"54"	"54"	"54"	"54"	"54"	"70"	"54"	∗2	"70"	∗2	∗3	∗3	"70"	"63"	"A6"	"9C"	REEL 7MSB REEL 0LSB BCD code
$\overline{\text{FWD}}$	O	Pin ⑩ of IC003	H	H	H	L	H	L	H	L	H	L	H	L	H	L	H	H	H	L	H	
$\overline{\text{PB • PAUSE}}$	O	Pin ㉓ of IC001	H	H	H	H	H	L	H	L	H	H	H	H	H	H	H	L	L	H	H	
$\overline{\text{CAP ON}}$	O	Pin ④ of IC001	H	H	H	L	H	L	H	L	H	L	L	L	L	L	L	∗1	∗1	L	L	

*1. Pulse output
*2. Changes with the cycle of SFG
*3. Changes with the tape speed (SP/LP)

3-10. SYSTEM CONTROL — SERVO (ATF SERVO) BLOCK INTERFACE

Signal name	Mode I/O	Mode Pin No.	STOP	FF	REW	REC	REC • PAUSE	AUDIO DUB	AUDIO DUB PAUSE	PB	PB • PAUSE	×1	−×1	×2	−×2	CUE (×9)	REV (−×7)	SLOW (1/5, 1/10)	SLOW (-1/5, -1/10)	FWD INDEX SEARCH	RVS INDEX SEARCH
ATF SW	O	Pin ⑫ of IC003	L	L	L	L	L	L	∗1	L	∗1	L	L	L	L	L	L	∗1	∗1	L	L
SEL16	O	Pin ② of IC002	L	L	L	∗2	L	∗2	L	∗2	L	∗2	∗2	∗2	∗2	∗2	∗2	∗2	∗2	L	L
TSA	O	Pin ④ of IC002	L	L	L	L	L	∗2	L	∗2	L	∗2	∗2	∗2	∗2	L	L	L	L	H	H
TSB	O	Pin ⑤ of IC002	L	L	L	L	L	∗2	L	∗2	L	∗2	∗2	∗2	∗2	L	L	L	L	L	L
MULTI	O	Pin ⑱ of IC003	Normally "L". "H" when multi PCM mode.																		
N PULSE	O	Pin ⑬ of IC003	L	L	L	L	L	L	∗1	L	∗1	L	L	L	L	L	L	∗1	∗1	L	L
RP PB MODE	O	Pin ㊹ of IC001	H	H	H	L	L	H	H	H	H	H	H	H	H	H	H	H	H	H	H
SEL 1	O	Pin ㊸ of IC002	H	H	H	∗2	∗2	∗2	∗2	∗2	∗2	∗2	∗2	∗2	∗2	∗2	∗2	∗2	∗2	H	H
SEL 2	O	Pin ① of IC002	H	H	H	∗2	∗2	∗2	∗2	∗2	∗2	∗2	∗2	∗2	∗2	∗2	∗2	∗2	∗2	H	H
M RF SW PULSE	I	Pins ㊽ and ㊾ of IC002	H/L	Field sync pulse																	
JOG VD INT	I	Pin ㊾ of IC001 and IC002	L	Pulse input																	
ME/$\overline{\text{MP}}$	O	Pin ③ of CN006	"L" when using MP tape or MPHG tape.																		

*1. Pulse output
*2. Pulse output with ATF sequence

3-11. SYSTEM CONTROL — SERVO (STILL) BLOCK INTERFACE

Signal name	I/O	Pin No.	STOP	FF	REW	REC	REC • PAUSE	AUDIO DUB	AUDIO DUB PAUSE	PB	PB • PAUSE	× 1	− × 1	× 2	− × 2	CUE (× 9)	REV (− × 7)	SLOW (1/5, 1/10)	SLOW (-1/5, -1/10)	FWD INDEX SEARCH	RVS INDEX SEARCH
RF PK	I	Pin ⑥① of IC001	Pulse input																		
STID	I	Pin ⑥④ of IC001	Pulse input																		

3-12. SYSTEM CONTROL — SERVO (HEAD SELECTING) BLOCK INTERFACE

Signal name	I/O	Pin No.	STOP	FF	REW	REC	REC • PAUSE	AUDIO DUB	AUDIO DUB PAUSE	PB	PB • PAUSE	× 1	− × 1	× 2	− × 2	CUE (× 9)	REV (− × 7)	SLOW (1/5, 1/10)	SLOW (-1/5, -1/10)	FWD INDEX SEARCH	RVS INDEX SEARCH
AUTO	O	Pin ③⑧ of IC001	L	L	L	L	L	L	L	L	L	L	L	L	L	H	H	* 1	* 1	H	H
LAMP	O	Pin ① of IC003	Normally "H". Pulse output when threading/unthreading.																		
SP/$\overline{LP}$	O	Pin ⑤⑩ of IC001	Output when recording in SP mode or playing back in SP mode.																		
HCHG	O	Pin ③ of IC002	* 1	* 1	* 1	* 1	* 1	* 2	* 1	* 2	* 1	* 2	* 2	* 2	* 2	* 2	* 2	* 2	* 2	* 2	* 2
V REC	O	Collector of Q054	L	L	L	H	L	L	L	L	L	L	L	L	L	L	L	L	L	L	L

*1. Depending upon a tape speed (SP/$\overline{LP}$). SP…"H", LP…"L".
*2. Pulse output

3-13. SYSTEM CONTROL — SERVO (AND OTHERS) BLOCK INTERFACE

Signal name	I/O	Pin No.	STOP	FF	REW	REC	REC • PAUSE	AUDIO DUB	AUDIO DUB PAUSE	PB	PB • PAUSE	× 1	− × 1	× 2	− × 2	CUE (× 9)	REV (− × 7)	SLOW (1/5, 1/10)	SLOW (-1/5, -1/10)	FWD INDEX SEARCH	RVS INDEX SEARCH
$\overline{M\ ATF\ LOCK}$	I	Pin ⑤⑥ of IC002		* 1	* 1					* 2		* 2	* 2	* 2	* 2	* 1	* 1			* 1	* 1
CAP FG	I	Pin ④⑩ of IC001	Indefinite			* 1	Indefinite	* 1	Indefinite	* 1	Indefinite	* 1	* 1	* 1	* 1	* 1	* 1	* 1	* 1	* 1	* 1
JOG	O	Pin ⑨ of IC001	L	L	L	L	L	H	H	L	H	H	H	H	H	H	H	H	H	H	H

*1. Pulse input
*2. "L" when ATF servo is phase locked.

3-14. SYSTEM CONTROL — MD BLOCK INTERFACE

Signal name	I/O	Pin No.	STOP	FF	REW	REC	REC・PAUSE	AUDIO DUB	AUDIO DUB PAUSE	PB	PB・PAUSE	×1	−×1	×2	−×2	CUE (×9)	REV (−×7)	SLOW (1/5, 1/10)	SLOW (-1/5, -1/10)	FWD INDEX SEARCH	RVS INDEX SEARCH
$\overline{\text{CC DOWN L}}$	I	Pin ㊼ of IC002	"H" when the cassette compartment is open. "L" when the cassette compartment is down.																		
$\overline{\text{LS TOP}}$	I	Pin ㊻ of IC002	"L" when cassette compartment is open. "H" in all the other conditions.																		
OPEN	O	Pin ⑧ of IC002	Normally "L". "H" when cassette compartment is open.																		
CLOSE	O	Pin ⑨ of IC002	Normally "L". "H" when cassette compartment is closed.																		
LOAD	O	Pin ⑥ of IC002	Normally "L". "H" when tape threading.																		
UNLOAD	O	Pin ⑦ of IC002	Normally "L". "H" when tape unthreading.																		
LA~LC	I	Pins ⑯ to ⑱ of IC002	"3"	"3"	"3"	"3"	"3"	"3"	"3"	"3"	"3"	"3"	"3"	"3"	"3"	"3"	"3"	"3"	"3"	"3"	"3"
CONTL	O	Pin ⑳ of IC002	Normally "L". "H" when shifting to mechanism mode.																		
CONTR	O	Pin ㉑ of IC002	Normally "L". "H" when shifting to mechanism mode.																		
MA~MC	I	Pins ⑫ to ⑭ of IC002	"3"	"6"	"6"	"1"	"1"	"1"	"1"	"1"	"1"	"1"	"1"	"1"	"1"	"1"	"1"	"1"	"1"	"1"	"1"
$\overline{\text{START}}$	O	Pin ㉒ of IC002	H	H	H	H	H	H	H	H	H	H	H	H	H	H	H	H	H	H	H
$\overline{\text{HOLD}}$	O	Pin ㉓ of IC002	H	L	L	H	H	H	H	H	H	H	H	H	H	H	H	H	H	H	H
REC PROOF	I	Pin ㊿ of IC002	"L" when recording enable cassette tape is inserted.																		
ME/$\overline{\text{MP}}$	I	Pin ㊶ of IC002	"L" when using MP tape or MPHG tape.																		
T10/$\overline{\text{T13}}$	I	Pin ㊷ of IC002	"L" when using the tape of 13 µm thickness																		
TFG1	I	Pins ㉚ and ㉞ of IC002	Indefinite	＊1	＊1	＊1	Indefinite	＊1	Indefinite	＊1	Indefinite	＊1	＊1	＊1	＊1	＊1	＊1	＊1	＊1	＊1	＊1
TFG2	I	Pin ㉜ of IC002	Indefinite	＊1	＊1	＊1	Indefinite	＊1	Indefinite	＊1	Indefinite	＊1	＊1	＊1	＊1	＊1	＊1	＊1	＊1	＊1	＊1
$\overline{\text{TOP}}$	I	Pin ㊹ of IC002	Normally "H". "L" at tape end. } When both signals are "H", cassette loaded is detected. When "L", cassette unloaded is detected.																		
$\overline{\text{END}}$	I	Pin ㊺ of IC002	Normally "H". "L" at tape end. }																		
SFG	I	Pins ㉙ and ㉝ of IC002	Indefinite	＊1	＊1	＊1	Indefinite	＊1	Indefinite	＊1	Indefinite	＊1	＊1	＊1	＊1	＊1	＊1	＊1	＊1	＊1	＊1
$\overline{\text{CC DOWN R}}$	I	Pin ㊷ of IC002	"H" when cassette compartment is open. "L" when cassette compartment is down.																		
LAMP	O	Pin ⑰ of IC003	"H" when tape threading is completed. Pulse output when tape threading or tape unthreading.																		

*1. Pulse according to reel rotation.

3-15. SYSTEM CONTROL — AFM AUDIO BLOCK INTERFACE (AU-54 BOARD)

Signal name	I/O	Mode Pin No.	STOP	FF	REW	REC	REC • PAUSE	AF REC	AF REC PAUSE	PB	PB • PAUSE	×1	−×1	×2	−×2	×9	−×9	SLOW (1/5, 1/10)	SLOW (-1/5, -1/10)	CUE	REV	FWD INDEX SEARCH	RVS INDEX SEARCH
IN SEL A	O	Pin ㉕ of IC001	According to input selection. (According to whether there are TUNER/LINE/SIMUL and microphone input.)																				
IN SEL B	O	Pin ㉖ of IC001																					
AF SEL	O	Pin ㉗ of IC001																					
OUT SEL A	O	Pin ③ of IC001	According to output selection. (According to the audio multiplex mode during receiving, the PCM ID code (STEREO/MONO/BILINGUAL) recorded on a tape during playing back and the sound monitoring switch.																				
OUT SEL B	O	Pin ② of IC001																					
OUT SEL C	O	Pin ① of IC001																					
SP/LP	O	Pin ㉗ of IC001	According to speed selecting or a playing back tape.																				
AUDIO MUTE	O	Pin ④ of IC001	H	H	H	H	H	H	H	H	L	H	H	H	H	H	H	H	H	H	H	L	L
AF PB/REC	O	Pin ㉙ of IC001	L	L	L	L	L		L	H	H	H	H	H	H	H	H	H	H	H	H	H	H
REC MUTE	O	Pin ㉘ of IC001	H	H	H	L	H	L	H	H	H	H	H	H	H	H	H	H	H	H	H	H	H
AFM MUTE 1	O	Pin ㉗ of IC001	*1	*1	*1	*1	*1	H	H	*2	H	H	H	*2	H	H	H	H	H	H	H	H	H
×2	O	Pin ㉚ of IC001	L	L	L	L	L	L	L	L	L	L	L	H	L	L	L	L	L	L	L	L	L

*1. According to broadcasting system (STEREO/MONO/BILINGUAL) and sound monitoring switch.
*2. According to PCM ID code recorded on a tape and sound monitoring switch.

3-16. PCM INDEX CONTROLLER — PCM AUDIO BLOCK INTERFACE

Signal name	I/O	Mode Pin No.	STOP	FF	REW	REC	REC • PAUSE	AF REC	AF REC PAUSE	PB	PB • PAUSE	×1	−×1	×2	−×2	×9	−×9	SLOW (1/5, 1/10)	SLOW (-1/5, -1/10)	FWD INDEX SEARCH	RVS INDEX SEARCH
PCM ACT	I	Pin ㊽ of IC500	L	L	L	H	L	H	L	"H" when playing back PCM signals.											
AF REC	O	Pin ㊾ of IC500	L	L	L	L	H	L	L	L	L	L	L	L	L	L	L	L	L	L	L
PCM PB/REC	O	Pin ㊿ of IC500	H	H	H	L	H	H	L	H	H	H	H	H	H	H	H	H	H	H	H
LOCK	O	Pin ㉗ of IC500	L	L	L	H	L	H	H	H	H	H	H	H	H	H	H	H	H	L	H
FOH	O	Pin ㊸ of IC500	H	H	H	H	H	H	H	H	H	H	H	H	H	H	H	H	H	L	H
FOL	O	Pin ㊷ of IC500	L	L	L	L	L	L	L	L	L	L	L	L	L	L	L	L	L	L	H

3-17. SYSTEM CONTROL — PCM AUDIO BLOCK INTERFACE

Signal name	I/O	Pin No.	Input/Output level
CAP ON	O	Pin ④ of IC001	"L" when capstan is rotating.
FE ON	O	Pin ㉘ of IC001	"L" when recording (including multi PCM REC) and AUDIO DUB.

3-18. SERVO — VIDEO BLOCK INTERFACE

Signal name	I/O	Pin No.	Input/Output level
SP CH SHORT	O	Pin ㊸ of IC205	"H" when recording or playing back in SP mode. "L" when recording or playing back in LP mode. Pulse or "H" when playing back at variable speeds. Pulse for LP mode and "H" for SP mode when multi PCM playing back. "L" for LP mode and "H" for SP mode when multi PCM playing back.
LP CH SHORT	O	Pin ㊹ of IC205	"L" when recording or playing back in SP mode. "H" when recording or playing back in LP mode. Pulse or "H" when playing back at variable speeds. "H" for LP mode and pulse for SP mode when multi PCM playing back. "H" for LP mode and "L" for SP mode when multi PCM recording.
COMP SYNC	I	Pin ㊺ of IC205	Positive polarity composite sync signal.
VI SWP	O	Pin ㊻ of IC205	50% duty pulse of 2V cycle.
HCHR	O	Pin ㊼ of IC205	"L" when stop. "H" when normal playback. Pulse when playing back at variable speeds.
YD EX	O	Pin ㊽ of IC205	Normally "L". "H" pulse when playing back at variable speeds in SP mode.
HH DL	O	Pin ㊾ of IC205	Normally "H". Pulse when playing back at variable speeds in SP mode.
LP VIDEO REC	O	Pin ㊿ of IC205	Normally "L". "H" when recording in LP mode.
LP PCM REC	O	Pin (51) of IC205	Normally "L". "H" pulse of V cycle when recording in LP mode (including AUDIO DUB, INDEX writing and multi PCM REC).
SP VIDEO REC	O	Pin (52) of IC205	Normally "L". "H" when recording in SP mode.
SP PCM REC	I	Pin (53) of IC205	Normally "L". "H" pulse of V cycle when recording in SP mode (including AUDIO DUB, INDEX writing and multi PCM REC).
RP SWP	I	Pin (54) of IC205	50% duty pulse of 2V cycle.
H CHG	O	Pin (55) of IC205	"H" when recording or playing back in SP mode. "L" when recording or playing back in LP mode. Pulse when playing back at variable speeds.
REF V	I	Pin (13) of IC210	"L" pulse of V cycle.

3-19. PCM AUDIO — VIDEO BLOCK INTERFACE

Signal name	I/O	Pin No.	Input/Output level
M FE ON	O	Pin ① of IC500	Normally "H". "L" when recording. "L" pulse of 2V cycle when AUDIO DUB. "L" pulse of V cycle when multi PCM recording.
RP AFTER REC	O	Pin (30) of IC500	Normally "L". "H" when AUDIO DUB or INDEX writing.
RAMP	O	Pin (12) of IC601	Normally "L". "H" when recording. "H" pulse of V cycle when AUDIO DUB or INDEX writing.
C MUTE	O	Pin (11) of IC606	Normally "L". "H" pulse of V cycle when AUDIO DUB or INDEX writing.
HD INSERT	O	Pin (14) of IC606	Normally "L". "H" pulse of H cycle in the writing period when AUDIO DUB or INDEX writing.
AF REC AREA	O	Pin (15) of IC606	Normally "L". "H" pulse of V cycle when AUDIO DUB or INDEX writing.

3-20. PCM AUDIO — SERVO BLOCK INTERFACE

Signal name	I/O	Pin No.	Input/Output level
M RF SWP	O	Pin ② of IC500	50% duty pulse of 2V cycle.
RF CONT	I	Pins ㉙ and ㉚ of IC500	50% duty pulse of 2V cycle.
R AREA	O	Pin (11) of IC601	Normally "L". "H" pulse of V cycle when recording (including AUDIO DUB, INDEX writing and multi PCM REC).
D RF SWP	O	Pin (10) of IC601	50% duty pulse of 2V cycle.
AREA	O	Pin ⑦ of IC604	"H" pulse of V cycle.
MS REF	I	Pin (14) of IC604	"H" pulse of V cycle.
ID RF SWP	I	Pin (15) of IC604 Pin (14) of IC601	50% duty pulse of 2V cycle.
CH A	O	Pin (17) of IC500	Signal indicating a track No. of multi PCM. CH A…LSB, CH C…MSB "H" for these three signals in mode except multi PCM mode.
CH B	O	Pin (16) of IC500	
CH C	O	Pin (15) of IC500	
HEAD SHORT	O	Pin ⑥ of IC500	Normally "H". "H" pulse of V cycle when multi PCM playing back.
WRITE	O	Pin (24) of IC500	"H" when INDEX writing.
ERASE	O	Pin (23) of IC500	"H" when INDEX deleting.

3-21. TUNER BLOCK DIAGRAM

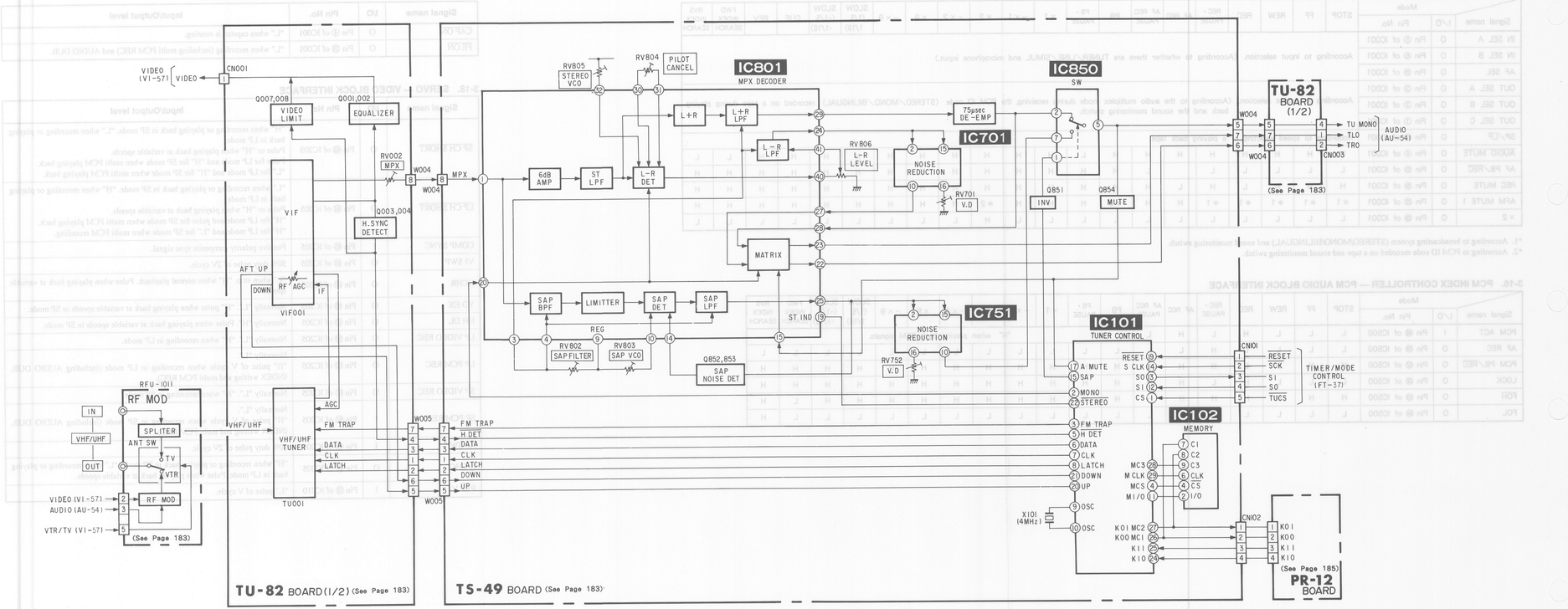

9.99 AUDIO BLOCK DIAGRAM

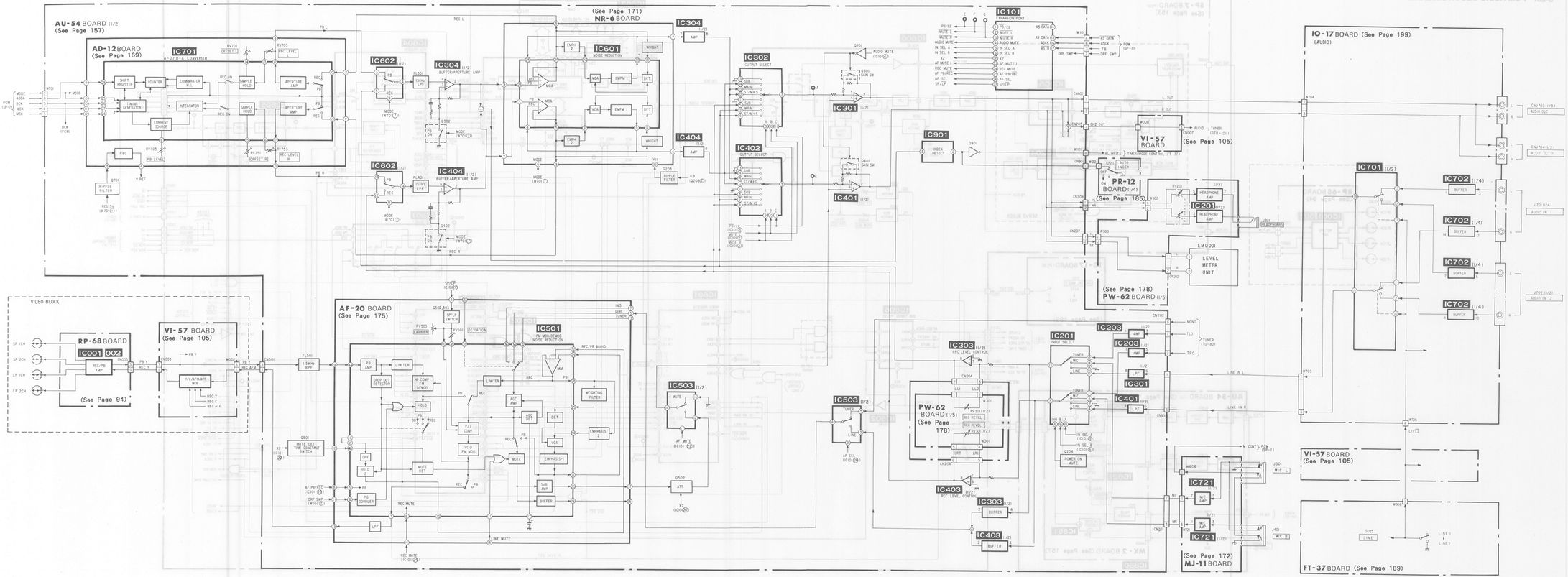

3-23. PCM AUDIO BLOCK DIAGRAM

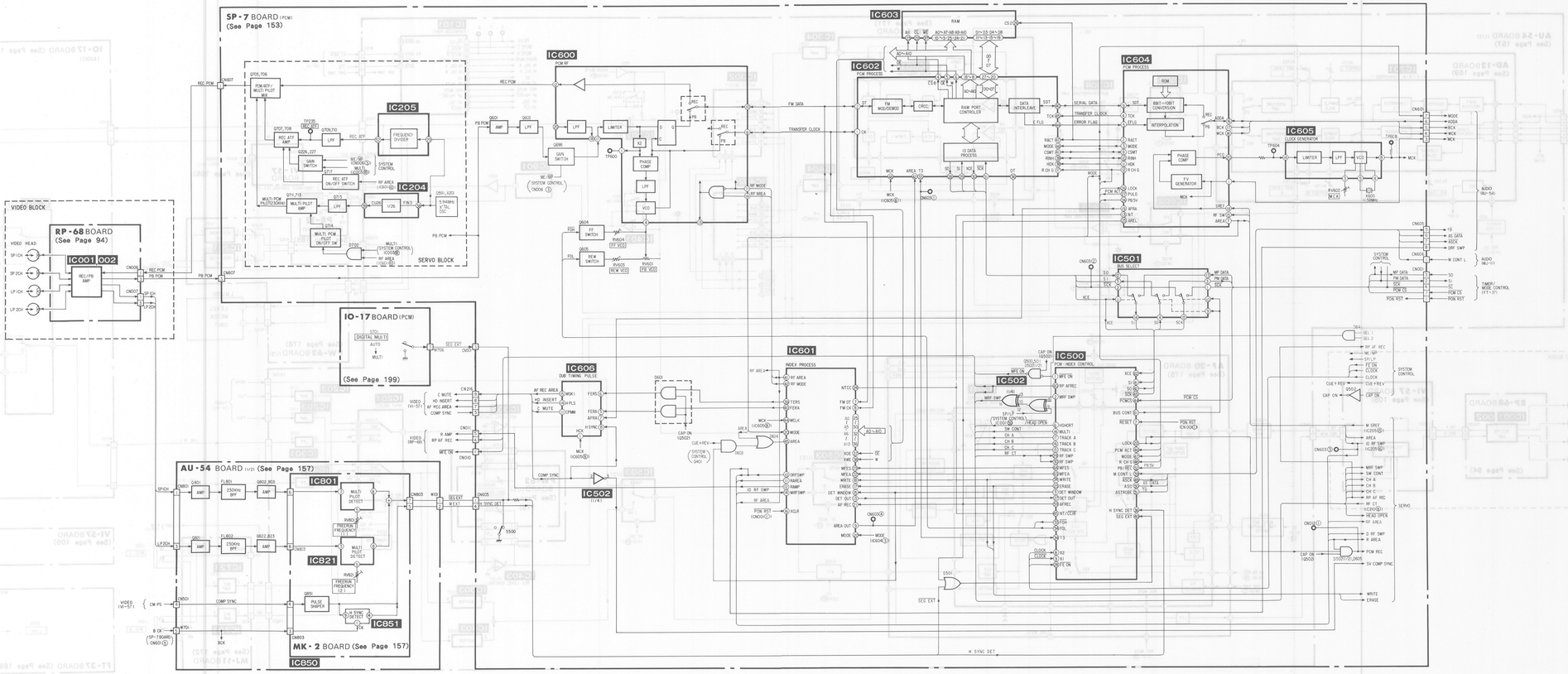

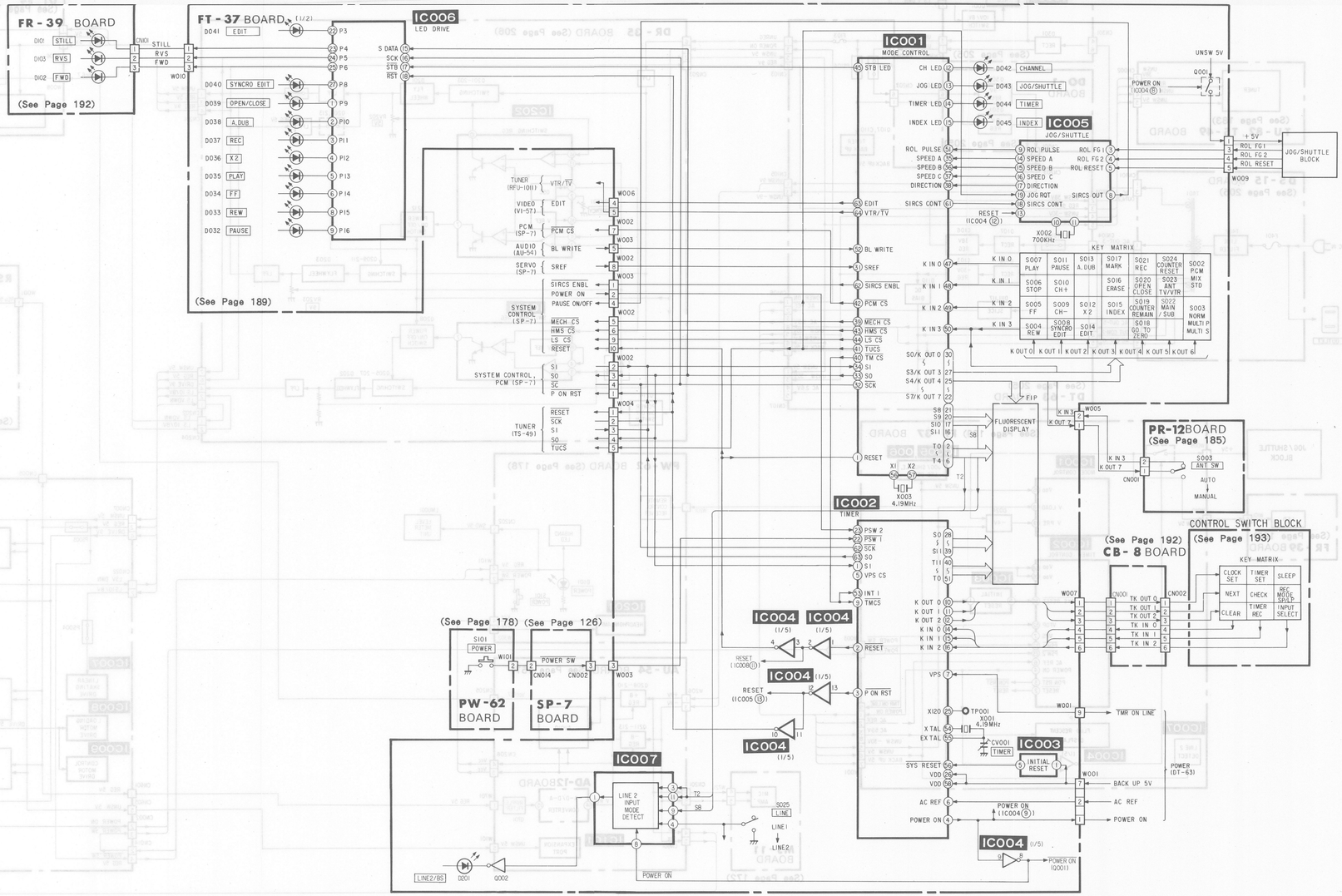
FR-39 BOARD
(See Page 192)
FT-37 BOARD
(See Page 189)
IC006
LED DRIVE
IC001
MODE CONTROL
IC005
JOG/SHUTTLE
JOG/SHUTTLE BLOCK
KEY MATRIX
FLUORESCENT DISPLAY
PR-12 BOARD
(See Page 185)
IC002
TIMER
CONTROL SWITCH BLOCK
(See Page 193)
(See Page 192)
CB-8 BOARD
(See Page 178)
(See Page 126)
PW-62 BOARD
SP-7 BOARD
IC004
IC003
INITIAL RESET
IC007
LINE 2 INPUT MODE DETECT
POWER ON
BACK UP 5V
AC REF
TMR ON LINE

3-25. POWER BLOCK DIAGRAM

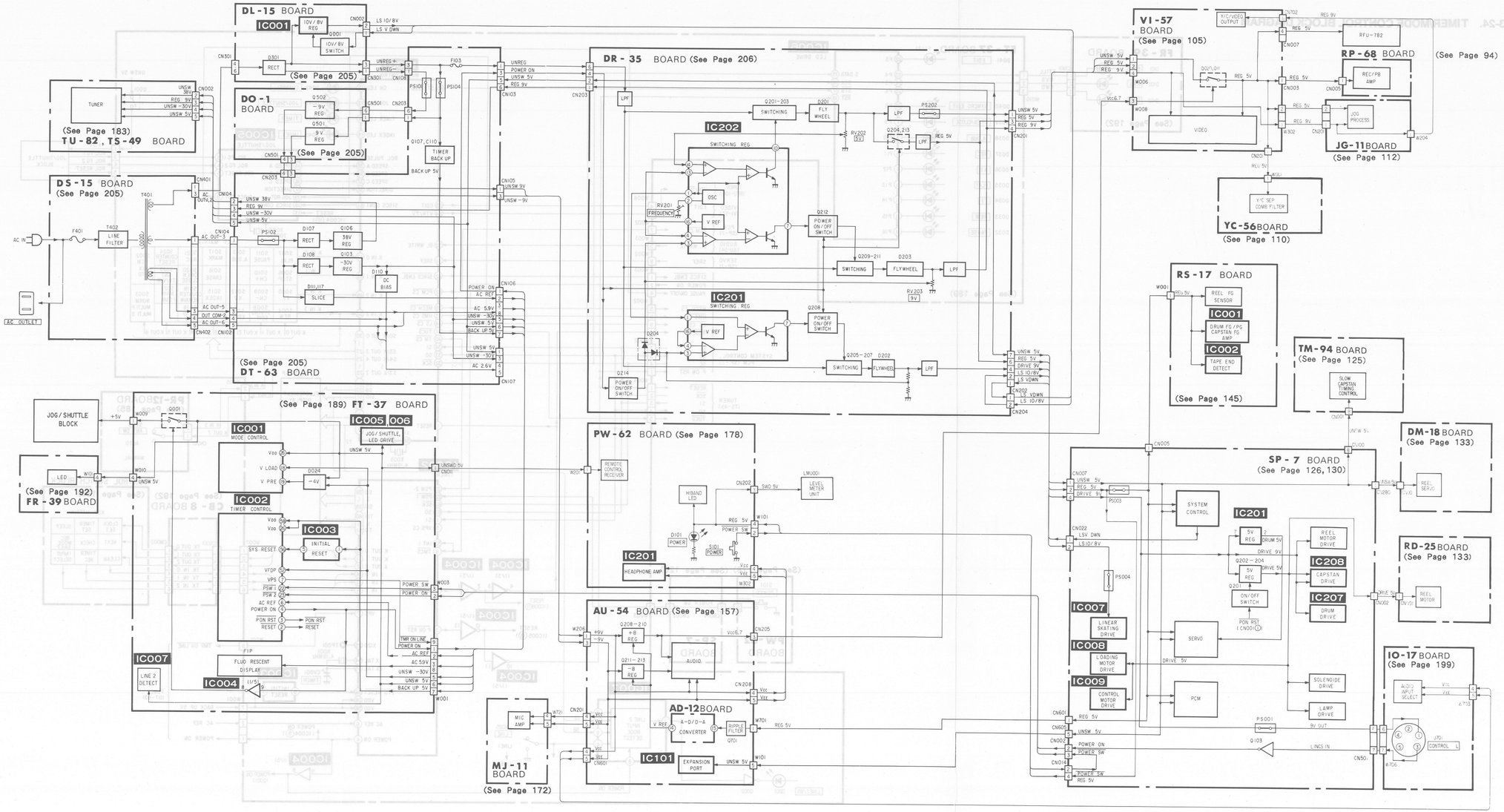

SECTION 4

PRINTED WIRING BOARDS AND SCHEMATIC DIAGRAMS

4-1. FRAME SCHEMATIC DIAGRAM

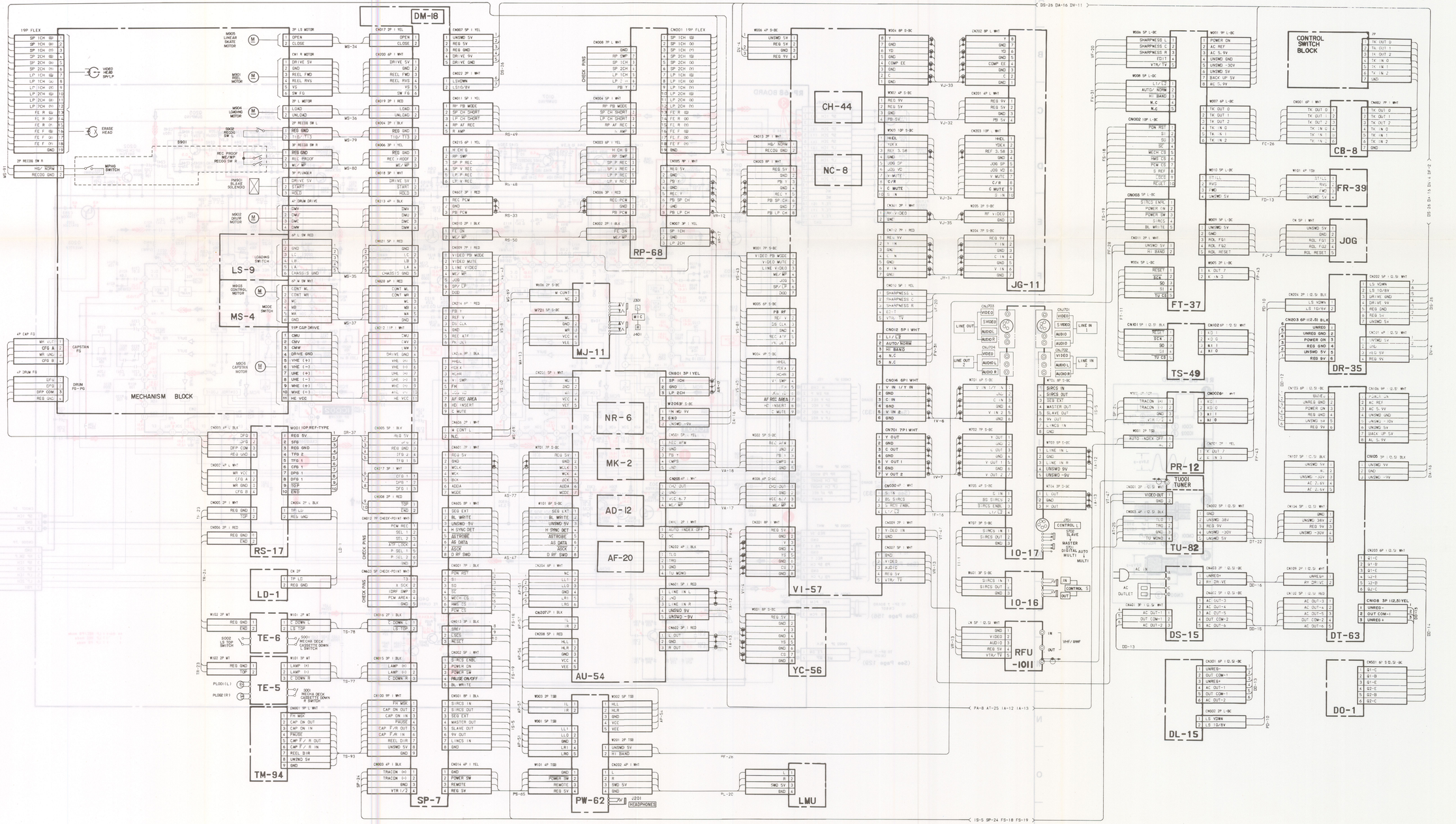

FRAME FRAME

FRAME FRAME

4-2. PRINTED WIRING BOARDS AND SCHEMATIC DIAGRAMS

RP-68 (HEAD AMP/FLYING ERASE) SCHEMATIC DIAGRAMS

— Ref. No. RP-68 BOARD: 1000 series —

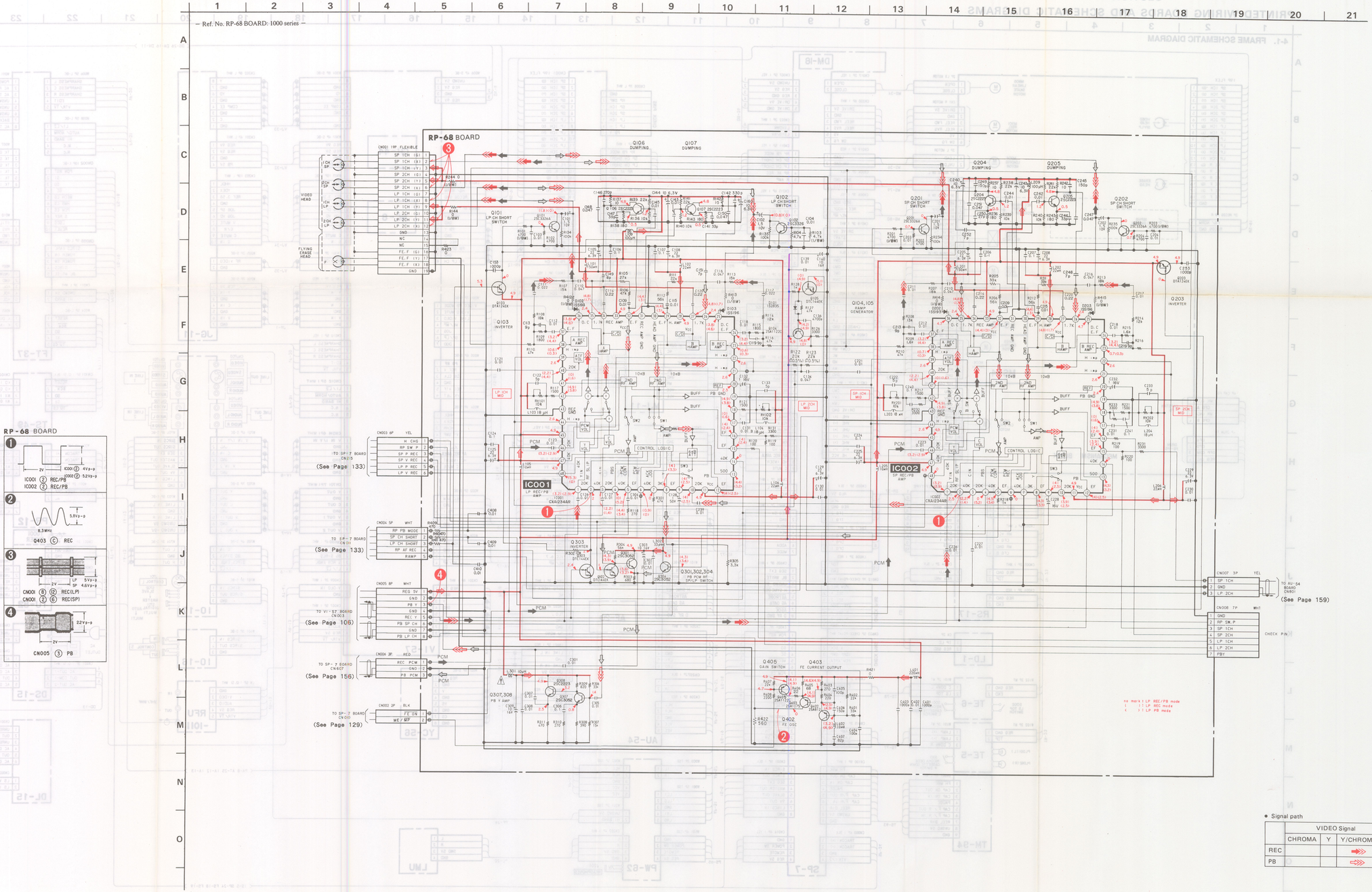

RP-68 BOARD

• Signal path

	VIDEO Signal			AUDIO Signal
	CHROMA	Y	Y/CHROMA	
REC			⇒	→
PB			⇨	⇨

RP-68 (HEAD AMP/FLYING ERASE) PRINTED WIRING BOARDS

– Ref. No. RP-68 BOARD: 1000 series –

RP-68 BOARD

CN001 E-5
CN002 B-1
CN003 B-7
CN004 A-7
CN005 B-2
CN006 A-3
CN007 A-2
CN008 A-5

D101 B-5
D102 D-4
D103 D-3
D202 D-7
D203 D-5

IC001 C-3
IC002 C-6

Q101 D-13
Q102 D-14
Q103 C-2
Q104 B-5
Q105 B-6
Q106 C-13
Q107 C-14
Q201 D-10
Q202 D-11
Q203 B-8
Q204 C-10
Q205 C-11
Q301 B-7
Q302 B-7
Q303 B-13
Q304 B-10
Q307 A-1
Q308 A-1
Q402 D-16
Q403 E-1
Q405 E-1

RV101 A-3
RV102 A-2
RV201 A-7
RV202 A-6

RP-68 BOARD (COMPONENT SIDE)

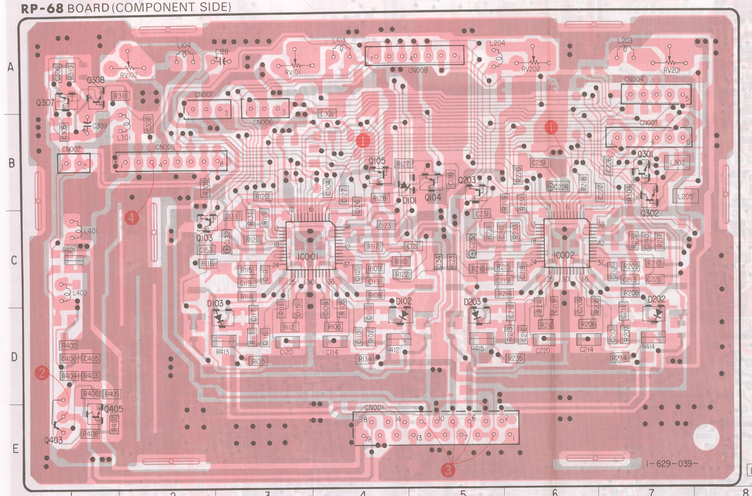

RP-68 BOARD (CONDUCTOR SIDE)

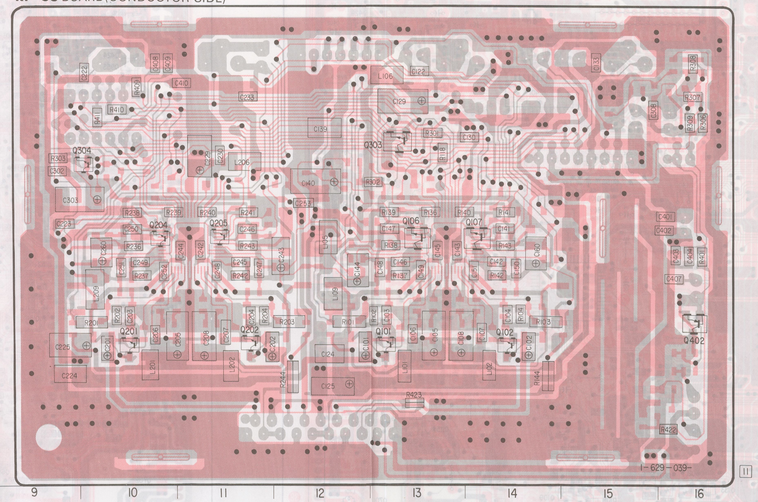

THIS NOTE IS COMMON FOR PRINTED WIRING BOARDS AND SCHEMATIC DIAGRAMS.
(In addition to this , the necessary note is printed in each block.)

- **For printed wiring boards.**
- ○— : indicated a lead wire mounted on the component side.
- ●— : indicated a lead wire mounted on the conductor side.
- ⊗ : Through hole.
- : Pattern from the side which enables seeing.
- : Pattern of the rear side.
- Circled numbers refer to waveforms.

Caution:

Pattern face side: (Conductor Side)	Parts on the pattern face side seen from the pattern face are indicated.
Parts face side: (Component side)	Parts on the parts face side seen from the parts face are indicated.

- **For schematic diagrams.**
- Caution when replacing chip parts.
  New parts must be attached after removal of chip.
  Be careful not to heat the minute side of tantalum capacitor, because it is damaged by the heat.
- All resistors are in ohms, 1/4W unless otherwise noted.
  Chip resistor are 1/10W unless otherwise noted.
  kΩ : 1000Ω , MΩ : 1000kΩ .
- All capacitors are in μF unless otherwise noted. pF: μμF.
  50V or less are not indicated except for electrolytics and tantalums.
- All variable and adjustable resistors have characteristic curve B, unless otherwise noted.
- : nonflammable resistor.
- : fusible resistor.
- : panel designation.
- △ : internal component.
- : adjustment for repeair.
- : B+ Line.
- : B– Line.
- : IN/OUT direction of (+, –) B LINE.
- Circled numbers refer to waveforms.
- Voltages are dc between ground and measurement points.
- Readings are taken with a color-bar signal input.
- Readings are taken with a digital multimeter (DC10MΩ).
- Voltages are taken with a VOM (Input impedance 10MΩ).
- Voltage variations may be noted due to normal production tolerances.

Note:	Note:
The components identified by mark ⚠ or dotted line with mark ⚠ are critical for safty. Replace only with part number specified.	Les composants identifiés par une marque ⚠ sont critiques pour la sécurité. Ne les remplacer que par une pièce portant le numéro spécifié.

When indicating parts by reference number, please include the board name.

VI-57 (VIDEO PROCESS) PRINTED WIRING BOARDS

— Ref. No. VI-57 BOARD: 2000 series —

VI-57 BOARD

CN003	B-8	Q151	F-17	Q809	H-23
CN007	A-13	Q152	E-17	Q810	G-23
CN009	C-14	Q201	F-4	Q811	G-23
CN010	A-3	Q202	G-4	Q812	G-24
CN012	A-4	Q203	G-4	Q813	H-21
CN013	D-6	Q204	F-4	Q901	A-20
CN014	D-14	Q205	F-4	Q902	A-19
CN030	E-14	Q206	F-26	Q950	C-10
CN201	H-7	Q207	F-25	Q951	C-12
CN301	A-12	Q208	F-25	Q952	C-17
CN310	C-6	Q209	G-4	Q953	C-16
CN311	C-4	Q210	I-25	Q954	D-16
CN701	H-14	Q211	I-25		
CN702	G-14	Q212	I-4	RV101	E-10
		Q213	H-4	RV102	F-9
D001	F-24	Q214	G-9	RV107	F-10
D002	F-24	Q301	C-6	RV108	G-12
D003	E-4	Q302	D-25	RV109	F-11
D004	A-24	Q303	H-24	RV110	G-11
D005	F-16	Q304	H-4	RV201	H-2
D006	E-16	Q305	I-24	RV202	I-2
D008	B-23	Q306	I-5	RV501	E-6
D012	F-6	Q307	D-26	RV502	E-5
D101	E-19	Q308	G-4	RV503	D-5
D104	I-25	Q401	D-20	RV601	H-12
D301	B-3	Q402	C-20	RV602	H-12
D303	A-6	Q403	C-19	RV604	I-12
D402	D-17	Q404	C-19	RV950	C-13
D403	B-17	Q405	C-19		
D405	C-19	Q406	C-19	TP001	F-12
D410	C-13	Q408	C-17	TP007	D-8
D411	D-16	Q409	C-12	TP015	D-7
D412	D-16	Q410	C-13		
D601	H-18	Q411	D-16		
D602	H-9	Q412	D-16		
D603	H-9	Q413	E-16		
D650	D-13	Q414	D-12		
		Q415	E-17		
IC001	G-5	Q416	G-23		
IC002	G-6	Q417	B-11		
IC101	F-10	Q418	B-11		
IC102	I-10	Q419	B-11		
IC201	H-3	Q420	C-17		
IC202	E-5	Q421	B-12		
IC302	B-4	Q422	B-17		
IC401	C-11	Q423	B-17		
IC402	C-13	Q424	B-16		
IC801	H-7	Q425	B-16		
IC802	I-5	Q426	B-17		
IC803	H-6	Q429	B-13		
IC804	H-6	Q430	B-16		
IC805	H-5	Q431	G-24		
IC901	B-10	Q432	G-23		
		Q433	C-18		
LV201	G-2	Q435	C-18		
		Q436	C-18		
Q001	D-20	Q437	C-17		
Q002	A-25	Q501	E-23		
Q003	A-24	Q502	E-24		
Q004	G-5	Q503	D-23		
Q005	F-23	Q504	D-24		
Q006	G-10	Q505	E-23		
Q007	E-24	Q506	E-24		
Q008	C-23	Q531	G-22		
Q009	B-24	Q532	G-22		
Q010	F-5	Q533	G-23		
Q011	B-11	Q534	G-22		
Q012	A-11	Q535	F-23		
Q013	A-19	Q536	F-7		
Q015	F-23	Q537	F-23		
Q020	B-17	Q538	F-22		
Q101	D-10	Q539	F-21		
Q102	F-19	Q540	E-22		
Q103	G-9	Q541	E-22		
Q104	G-13	Q542	F-22		
Q107	G-12	Q601	H-18		
Q105	H-20	Q602	H-18		
Q106	H-20	Q603	H-11		
Q108	H-10	Q604	H-11		
Q109	H-10	Q605	I-18		
Q110	G-10	Q606	I-18		
Q111	G-10	Q607	I-18		
Q112	F-19	Q608	G-19		
Q113	H-10	Q609	G-19		
Q114	E-12	Q611	G-19		
Q115	G-12	Q612	G-19		
Q116	G-18	Q613	H-19		
Q117	G-11	Q614	H-20		
Q118	F-13	Q615	G-18		
Q119	E-18	Q616	H-18		
Q120	F-17	Q617	H-11		
Q121	E-12	Q618	H-9		
Q122	F-16	Q701	H-13		
Q123	E-17	Q702	G-16		
Q124	E-18	Q703	G-13		
Q125	D-18	Q704	G-16		
Q126	D-18	Q801	G-22		
Q127	D-11	Q802	I-22		
Q128	E-18	Q803	I-23		
Q129	F-11	Q804	I-23		
Q130	F-16	Q805	I-24		
Q131	E-12	Q806	I-5		
Q133	H-9	Q807	I-23		
Q137	C-18	Q808	G-22		

VI-57 BOARD (COMPONENT SIDE)

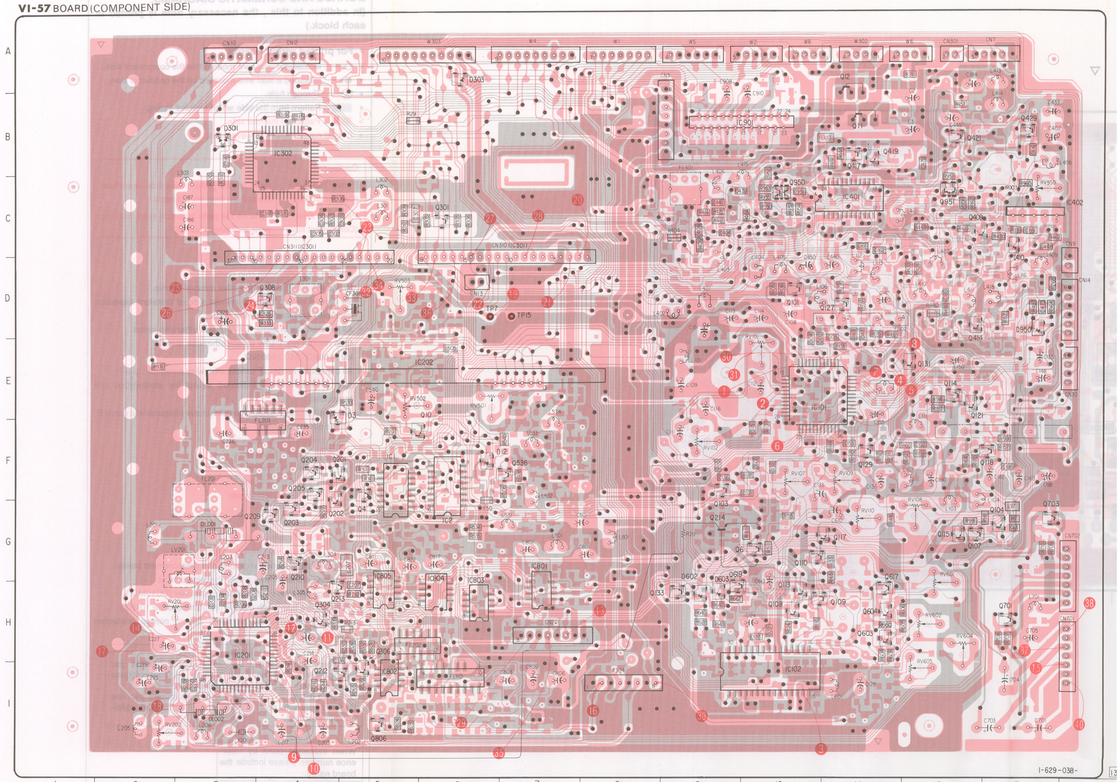

I-629-038-

VI-57 BOARD (CONDUCTOR SIDE)

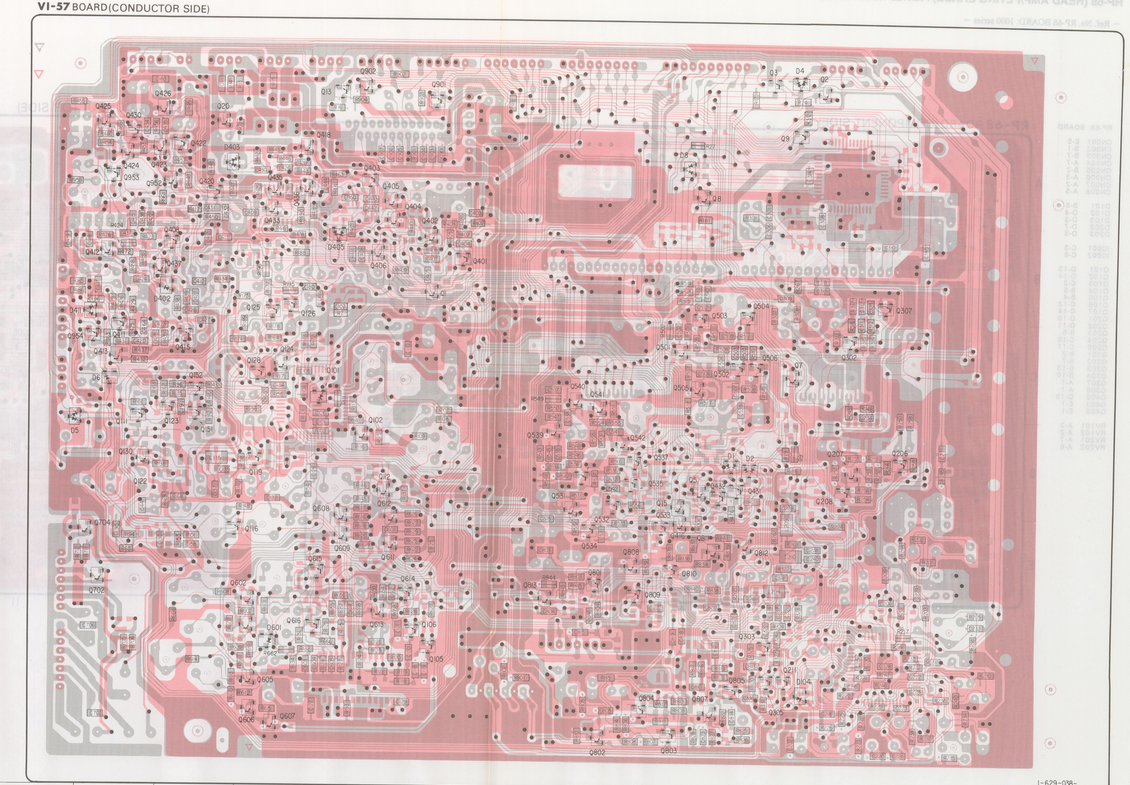

I-629-038-

— Ref. No. VI-57 BOARD: 2000 series —

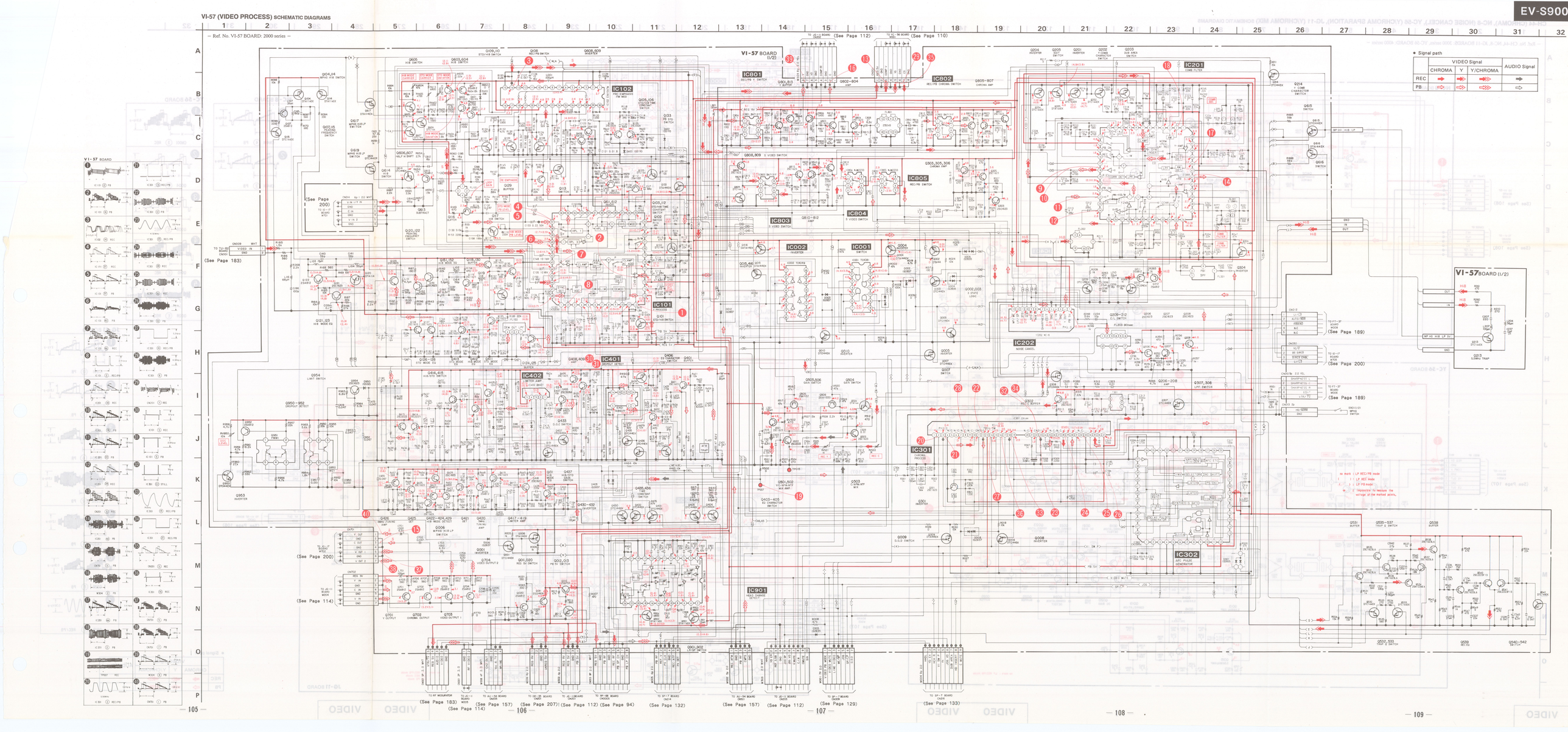

CH-44 (CHROMA), NC-8 (NOISE CANCEL), YC-56 (Y/CHROMA SPARATION), JG-11 (Y/CHROMA MIX) SCHEMATIC DIAGRAMS

– Ref. No. CH-44, NC-8, JG-11 BOARDS: 3000 series, YC-56 BOARD: 4000 series –

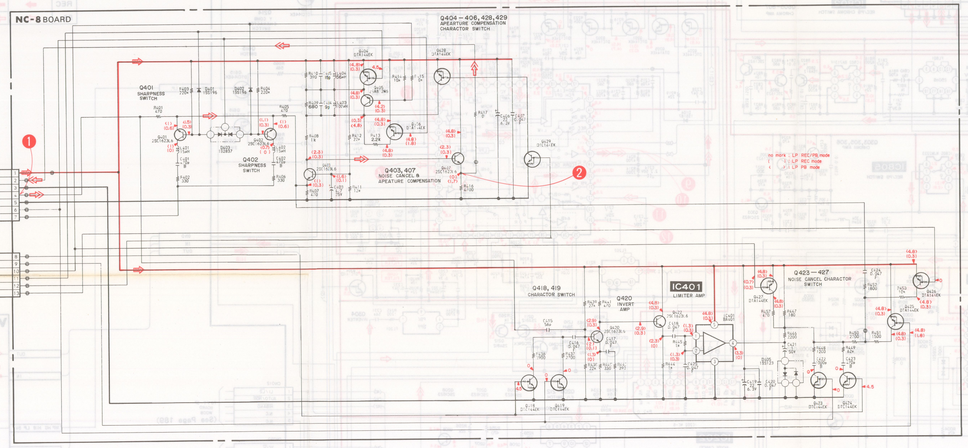

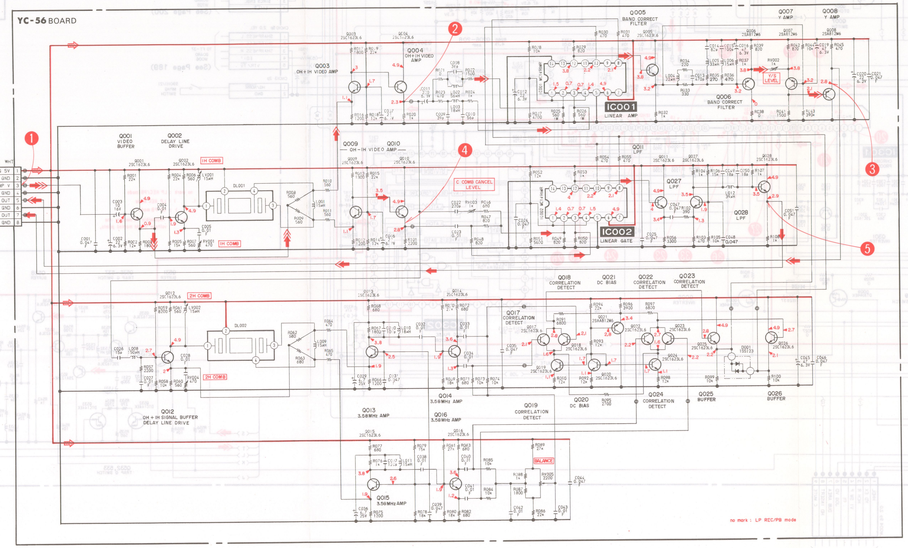

CH-44 (CHROMA), NC-8 (NOISE CANCEL), YC-56 (Y/CHROMA SPARATION), JG-11 (Y/CHROMA MIX) PRINTED WIRING BOARDS

– Ref. No. CH-44, NC-8, JG-11 BOARDS: 3000 series, YC-56 BOARD: 4000 series –

IC010
CH-44 BOARD (COMPONENT SIDE)

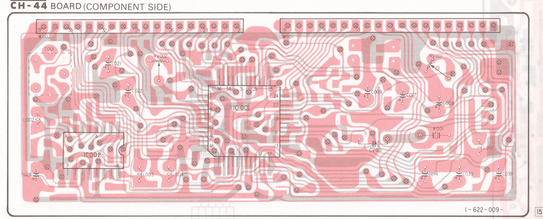

IC010
CH-44 BOARD (CONDUCTOR SIDE)

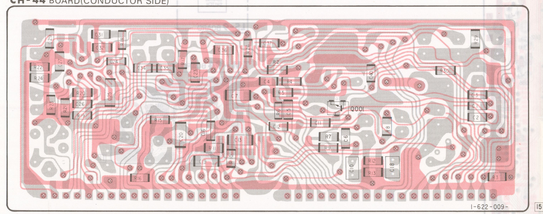

Caution:

Pattern face side: (Conductor Side) — Parts on the pattern face side seen from the pattern face are indicated.

Parts face side: (Component side) — Parts on the parts face side seen from the parts face are indicated.

YC-56 BOARD

D001 I-1

IC001 B-4
IC002 C-4

LV001 D-5
LV002 D-3

Q001 D-6
Q002 F-5
Q003 G-5
Q004 G-5
Q005 B-4
Q006 H-5
Q007 H-6
Q008 H-5
Q009 C-4
Q010 D-4
Q011 C-4
Q012 D-3
Q014 D-1
Q015 A-3
Q016 B-3
Q017 C-1
Q018 C-1
Q019 D-1
Q020 C-1
Q021 B-1
Q022 B-1
Q023 B-1
Q024 B-1
Q025 H-1
Q026 H-1
Q027 G-5
Q028 G-5

RV001 D-5
RV002 B-6
RV003 D-3
RV004 C-2
RV005 A-2

YC-56 BOARD (COMPONENT SIDE)

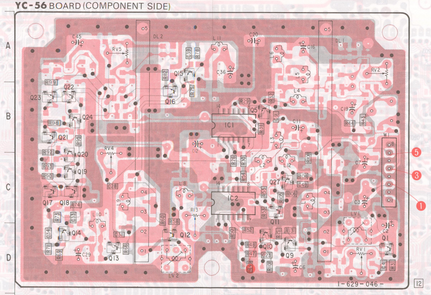

YC-56 BOARD (CONDUCTOR SIDE)

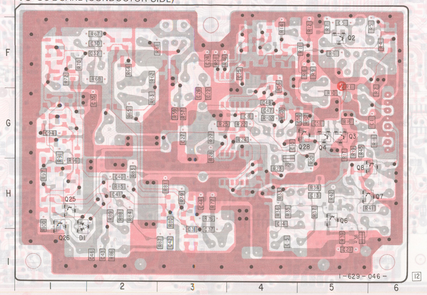

JG-11 BOARD

CN201 B-5
CN202 C-5
CN203 C-3

D201 D-3
D203 D-3
D204 A-2

IC201 B-4
IC202 B-4
IC203 B-3
IC204 A-3
IC205 A-2

Q201 A-5
Q202 F-4
Q203 B-4
Q204 E-5
Q205 D-5
Q206 C-2
Q207 C-2
Q208 B-2
Q209 D-2
Q210 E-2
Q211 B-2
Q212 E-3
Q213 A-4
Q214 A-5
Q215 F-3
Q216 B-6
Q217 E-7
Q219 F-7
Q221 D-4
Q222 E-2
Q223 E-2
Q224 B-2
Q225 F-3
Q226 A-3

RV201 A-5
RV202 A-7

JG-11 BOARD (COMPONENT SIDE)

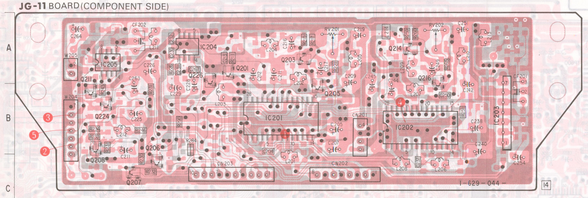

JG-11 BOARD (CONDUCTOR SIDE)

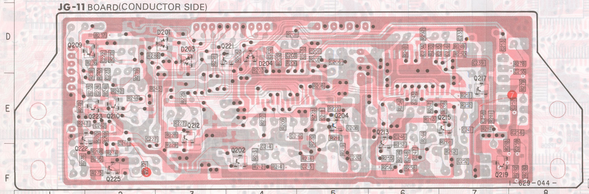

NC-8 BOARD

CN401 B-8
CN402 B-11

D401 A-4
D402 A-4
D403 B-5
D404 B-3
D405 A-1

IC401 A-1

Q401 B-4
Q402 B-4
Q403 B-5
Q404 A-5
Q405 B-5
Q406 B-5
Q407 B-3
Q408 B-3
Q411 B-3
Q412 A-3
Q413 A-3
Q414 B-3
Q415 A-3
Q416 B-2
Q417 A-3
Q418 A-2
Q419 A-2
Q420 A-2
Q422 A-2
Q423 A-1
Q424 A-1
Q425 B-1
Q426 B-1
Q427 B-1
Q428 A-10
Q429 F-10

NC-8 BOARD (CONDUCTOR SIDE)

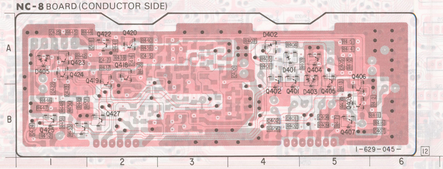

NC-8 BOARD (COMPONENT SIDE)

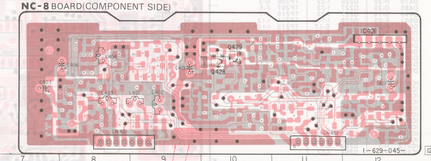

SP-7 (SYSTEM CONTROL), MS-4 (MODE SWITCH/MODE CONTROL MOTOR), LS-9 (LOADING SWITCH), TM-94 (SLOW CAPSTAN TIMING CONTROL) PRINTED WIRING BOARDS

– Ref. No. SP-7, MS-4 BOARDS: 5000 series, TM-94 BOARD: 6000 series –

SP-7 BOARD

CN001 D-9
CN002 J-4
CN003 G-13
CN004 A-9
CN005 A-5
CN006 A-6
CN007 A-10
CN008 F-13
CN009 A-6
CN010 D-8
CN011 D-9
CN012 K-26
CN013 J-3
CN014 J-3
CN015 A-7
CN016 G-13
CN017 B-11
CN018 A-10
CN019 A-13
CN020 D-13
CN021 D-12
CN022 B-12
CN100 F-11
CN200 E-8
CN212 A-12
CN213 A-11
CN214 J-7
CN215 J-4
CN216 K-4
CN217 F-6
CN280 E-8
CN501 D-1
CN601 B-5
CN603 K-25
CN605 E-5
CN606 E-6
CN607 A-5

D020 A-18
D021 A-10
D060 D-12
D080 I-27
D081 F-7
D082 F-28
D098 D-7
D099 B-23
D201 G-23
D204 B-16
D205 C-20
D206 G-19
D208 G-18
D209 H-9
D210 I-10
D211 I-9
D212 I-17
D213 G-24
D214 I-18
D215 H-18
D216 G-21
D217 I-6
D218 I-12
D223 G-20
D225 F-20
D226 I-11
D227 G-24
D228 F-21
D231 E-23
D233 C-20
D280 G-19
D281 E-22
D282 E-9
D390 C-10
D391 F-25
D392 G-23
D393 H-11
D433 H-11
D461 H-2
D463 H-18
D464 I-13
D470 I-22
D485 D-20
D490 D-18
D501 E-23
D502 F-25
D600 B-27
D602 F-26
D603 F-26
D604 F-26
D605 F-25
D701 I-19
D702 J-6

IC001 G-11
IC002 D-12
IC003 I-7
IC004 E-11
IC005 E-19
IC007 C-11
IC008 C-11
IC009 G-11
IC010 J-12
IC011 H-11
IC012 H-1
IC120 I-1
IC121 J-1
IC201 B-8
IC202 H-16
IC204 G-6
IC205 G-3
IC206 C-13
IC207 B-12
IC208 B-13
IC210 J-21
IC211 H-19
IC212 I-19
IC213 I-17
IC214 H-16
IC215 H-16
IC216 F-22
IC217 B-21
IC218 B-19
IC219 C-20
IC220 E-6
IC500 E-6
IC501 B-6
IC502 H-27
IC600 B-2
IC601 F-3
IC602 D-3
IC604 D-26
IC605 B-6
IC700 G-6
IC701 J-18
IC703 J-12

Q010 O-11
Q011 O-12
Q012 O-13
Q013 F-16
Q014 O-23
Q015 O-19
Q020 N-19
Q021 B-10
Q022 B-10
Q023 B-18
Q054 G-5
Q055 H-5
Q060 I-17
Q070 B-21
Q201 I-7
Q202 I-7
Q081 I-2
Q083 H-28
Q083 F-1
Q084 G-28
Q085 F-28
TP006 F-1
Q087 E-1
Q088 E-2
Q090 D-5
Q091 D-6
Q098 O-14
Q099 F-15
Q103 B-1
Q120 I-28
Q121 C-1
Q122 C-28
Q200 I-28
Q201 B-18
Q202 B-18
Q203 B-18
Q204 B-19
Q205 I-8
Q206 C-12
Q207 C-15
Q208 D-13
Q209 C-12
Q210 G-23
Q211 I-7
Q212 A-8
Q213 A-8
Q214 G-20
Q215 G-9
Q216 I-22
Q227 I-23
Q227 I-23
Q228 I-19
Q229 F-19
Q230 F-17
Q233 I-12
Q234 G-24
Q236 F-21
Q237 B-21
Q238 E-17
Q239 C-20
Q240 D-10
Q242 J-3
Q243 B-9
Q244 B-9
Q245 J-17
Q246 G-8
Q248 H-12
Q249 I-12
Q250 J-12
Q251 J-12
Q252 J-17
Q253 J-17
Q254 I-12

Q256 I-17
Q257 F-21
Q258 F-20
Q260 B-15
Q261 B-16
Q262 B-15
Q263 G-23
Q264 G-23
Q276 O-13
Q277 O-13
Q281 D-18
Q282 D-16
Q283 D-19
Q286 G-20
Q288 E-7
Q289 E-9
Q301 J-24
Q400 F-7
Q470 H-1
QA71 H-20
Q485 C-8
Q491 D-18
Q492 D-18
Q493 E-18
Q500 E-23
Q501 E-23
Q502 E-23
Q591 D-27
Q600 B-3
Q603 B-3
Q604 B-2
Q605 C-2
Q606 H-2
Q698 B-28
Q701 J-6
Q702 J-5
Q703 J-5
Q704 K-6
Q705 J-22
Q706 J-23
Q707 I-6
Q708 I-23
Q709 I-22
Q710 J-4
Q711 J-23
Q712 J-24
Q713 J-24
Q714 J-23
Q715 K-3
Q717 I-22
Q777 H-17
Q785 K-18

RV201 I-7
RV202 I-6
RV203 I-6
RV204 I-7
RV205 K-13
RV206 J-13
RV207 J-13
RV208 J-13
RV209 E-8
RV210 J-11
RV212 J-9
RV213 I-9
RV216 I-7
RV217 D-10
RV218 D-10
RV600 B-2

RV602 B-4
RV603 C-2
RV604 B-2
RV701 J-9

TP001 H-11
TP003 E-13
TP202 F-6
TP203 F-5
TP206 G-3
TP207 F-5
TP210 E-7
TP211 I-15
TP212 I-14
TP213 J-4
TP228 G-12
TP230 J-8
TP232 C-13
TP235 J-7
TP236 J-12
TP237 H-13
TP240 I-9
TP443 E-10
TP600 C-2
TP601 C-2
TP604 C-4
TP609 C-3

SP-7 BOARD (COMPONENT SIDE)

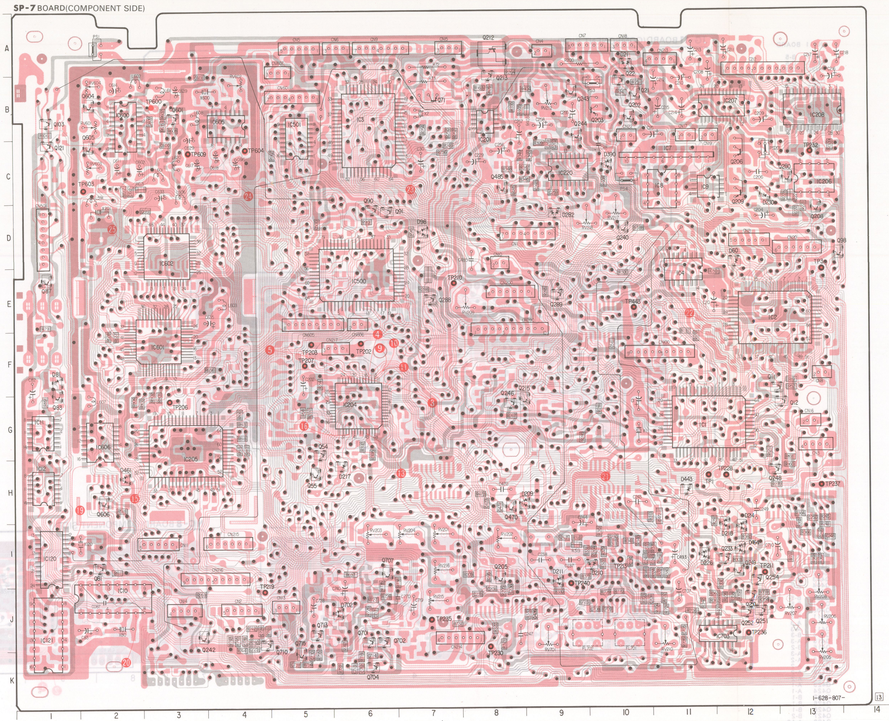

SP-7 BOARD (CONDUCTOR SIDE)

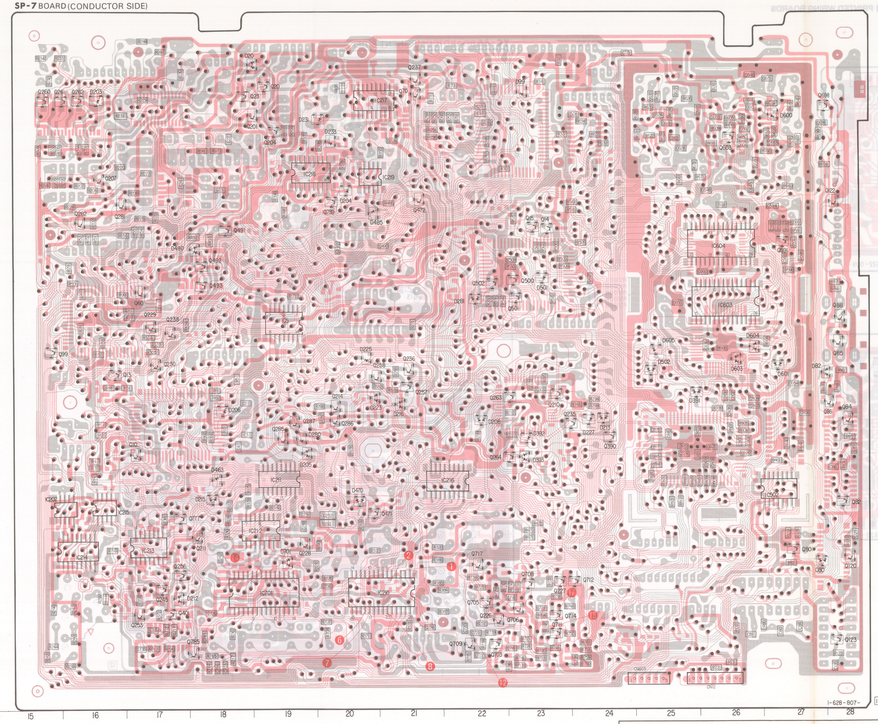

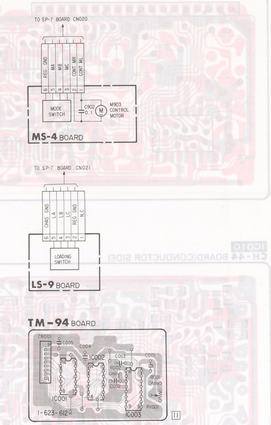

Caution:
Pattern face side: (Conductor Side) Parts on the pattern face side seen from the pattern face are indicated.
Parts face side: (Component side) Parts on the parts face side seen from the parts face are indicated.

– Ref. No. SP-7, MS-4 BOARDS: 5000 series, TM-94 BOARD: 6000 series –

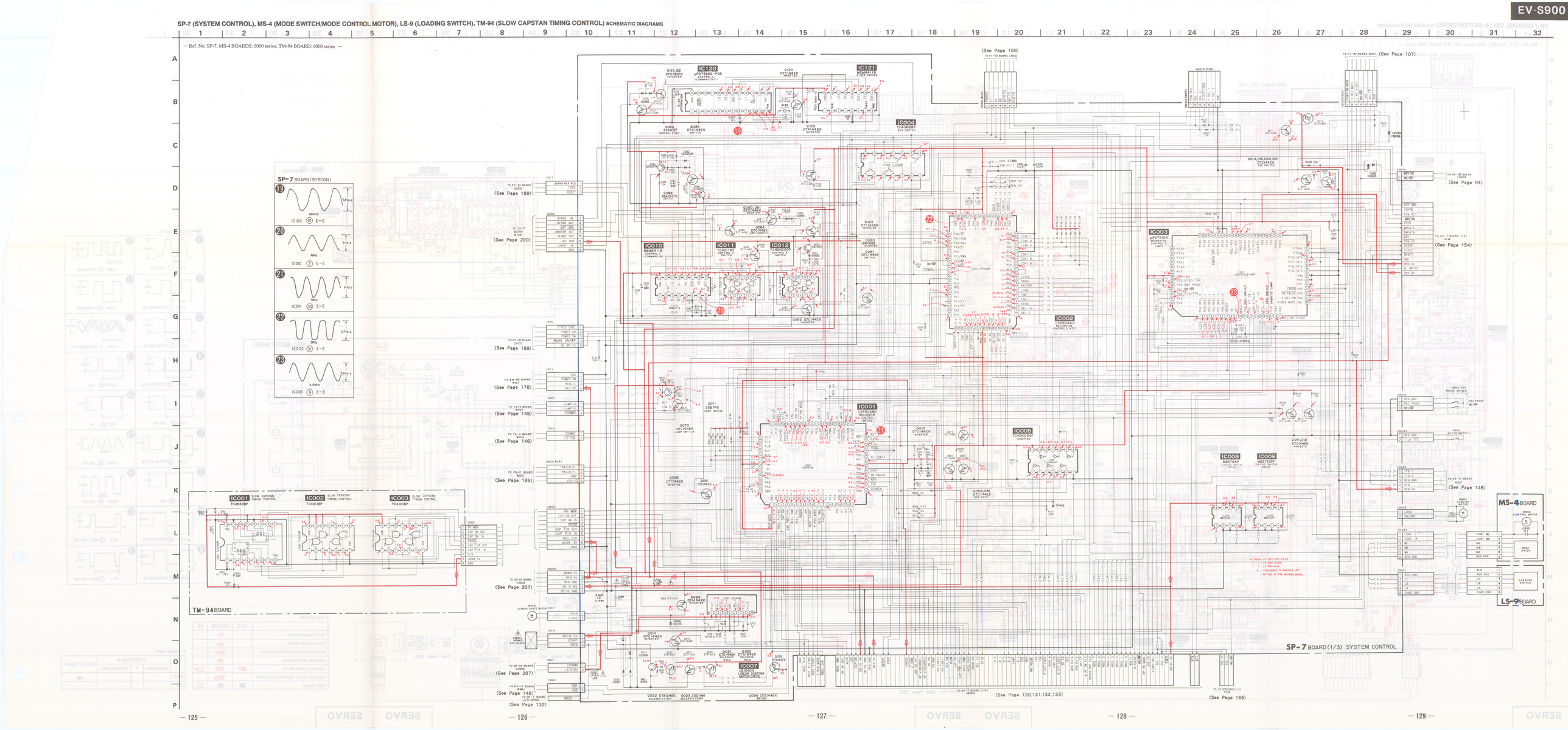

SP-7 (SERVO), DM-18 (MOTOR DRIVE) SCHEMATIC DIAGRAMS

— Ref. No. SP-7, BOARD: 5000 series, DM-18 BOARD: 7000 series —

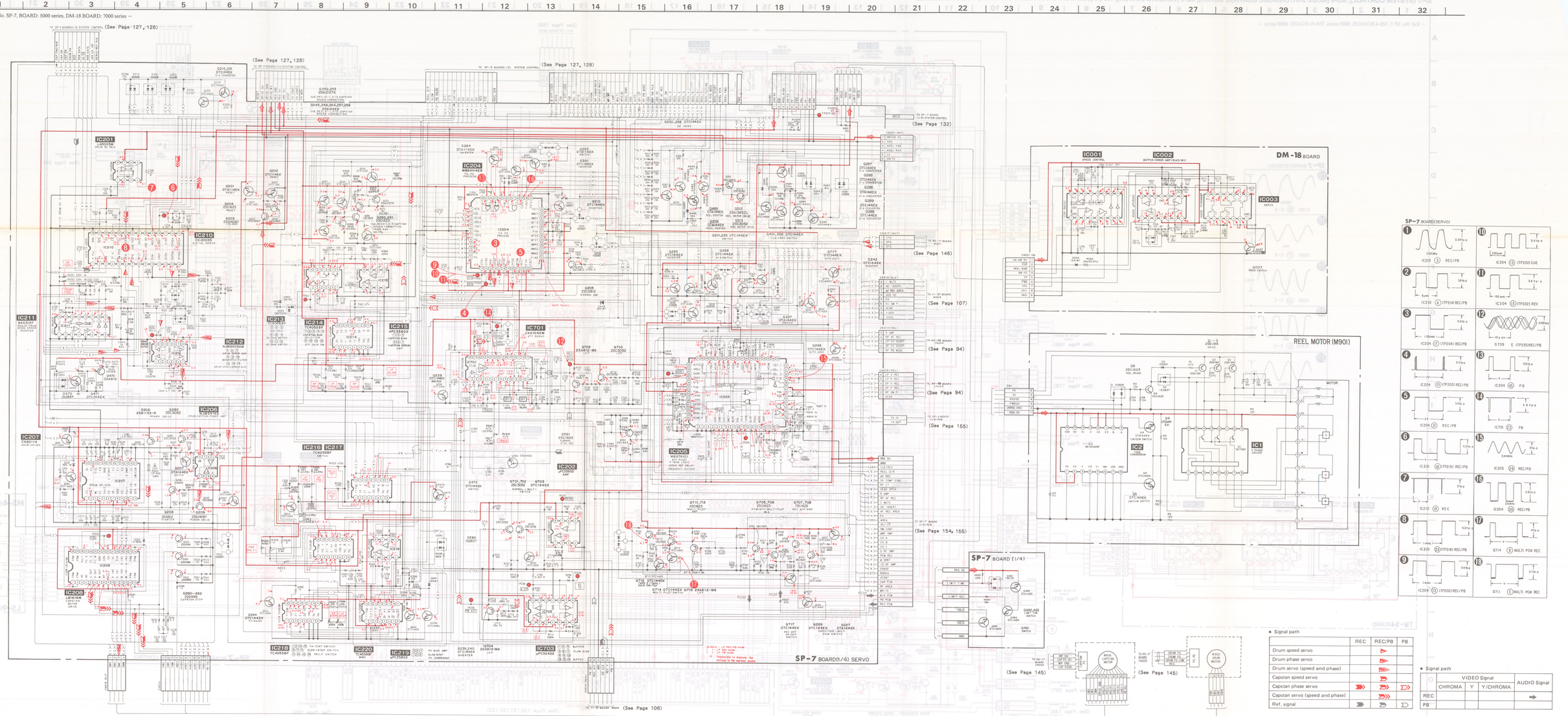

• Signal path

	REC	REC/PB	PB
Drum speed servo		▶	
Drum phase servo		▶	
Drum servo (speed and phase)		▶	
Capstan speed servo		▶	
Capstan phase servo	▶	▶	▷
Capstan servo (speed and phase)		▶	
Ref. signal	▶	▶	▷

• Signal path

	VIDEO Signal			AUDIO Signal
	CHROMA	Y	Y/CHROMA	
REC				➡
PB				

SP-7 (SERVO), DM-18 (MOTOR DRIVE) PRINTED WIRING BOARDS

– Ref. No. SP-7, BOARD: 5000 series, DM-18 BOARD: 7000 series –

SP-7 BOARD

CN001 D-9
CN002 J-4
CN003 G-13
CN004 A-9
CN005 A-5
CN006 A-10
CN007 A-13
CN008 E-13
CN009 A-6
CN010 D-8
CN011 I-3
CN012 K-26
CN013 J-5
CN014 A-4
CN015 J-6
CN016 G-13
CN017 E-11
CN018 A-10
CN019 B-11
CN020 D-13
CN021 D-12
CN022 B-10
CN100 E-8
CN101 E-8
CN212 A-12
CN213 A-11
CN214 J-7
CN215 I-4
CN216 I-4
CN217 F-6
CN280 E-8
CN501 K-5
CN502 D-5
CN503 K-26
CN505 E-5
CN506 E-6
CN507 A-5

D020 A-18
D021 A-10
D080 A-12
D081 F-1
D082 F-28
D098 D-7
D099 B-23
D120 C-21
D203 B-16
D204 C-20
D205 B-18
D206 G-18
D208 H-9
D210 I-10
D211 I-9
D212 J-17
D213 G-24
D214 I-12
D215 H-18
D216 G-21
D217 I-2
D218 I-2
D223 G-20
D225 F-20
D226 I-11
D227 G-24
D230 C-12
D231 B-20
D232 C-19
D280 C-19
D281 E-22
D282 D-9
D390 C-10
D391 F-25
D392 G-23
D393 G-23
D443 H-11
D451 H-2
D463 H-19
D470 H-19
D479 H-20
D485 D-20
D490 D-18
D501 E-23
D502 F-25
D600 B-27
D601 F-27
D603 F-26
D604 F-25
D605 F-25
D701 I-19
D702 J-6

IC001 G-11
IC002 D-12
IC003 B-5
IC004 E-11
IC005 E-18
IC007 C-11
IC008 C-11
IC009 C-11
IC010 J-12
IC011 H-11
IC012 H-1
IC120 I-1
IC121 J-1
IC201 B-8
IC202 H-16
IC204 G-3
IC205 C-13
IC207 B-12
IC208 B-13
IC210 J-21
IC211 H-19
IC212 I-19
IC213 I-4
IC214 I-16
IC216 H-16
IC216 H-22
IC217 B-21
IC218 C-19
IC219 C-20
IC220 C-20
IC500 E-6
IC501 H-27
IC502 E-6
IC600 B-2
IC601 D-3
IC602 D-3
IC604 D-26
IC605 B-4
IC606 B-4
IC701 J-11
IC703 J-12

Q010 G-11
Q011 I-12
Q012 G-13
Q013 F-16
Q014 D-23
Q015 D-23
Q020 B-16
Q021 B-10
Q022 B-10
Q023 B-18
Q054 G-3
Q055 H-5
Q060 E-17
Q070 B-21
Q071 B-7
Q080 I-27
Q081 I-28
Q082 F-1
Q083 H-28
Q084 G-28
Q085 F-28
Q086 G-28
Q087 E-1
Q088 E-28
Q090 D-6
Q091 D-6
Q098 F-15
Q103 I-3
Q120 I-28
Q121 C-1
Q122 C-28
Q123 I-23
Q201 B-19
Q202 B-19
Q203 B-10
Q204 B-19
Q205 I-8
Q206 C-12
Q207 C-16
Q208 D-13
Q209 D-12
Q210 G-23
Q211 I-18
Q212 A-8
Q213 A-20
Q214 G-20
Q215 G-9
Q226 I-23
Q227 I-23
Q227 I-23
Q228 I-19
Q229 E-17
Q230 F-17
Q231 E-24
Q235 F-21
Q237 B-21
Q238 E-17
Q239 D-20
Q240 D-10
Q242 J-3
Q243 B-9
Q244 B-9
Q245 J-17
Q247 H-12
Q248 H-12
Q249 I-12
Q250 J-12
Q251 J-12
Q252 J-12
Q253 J-17
Q254 I-12
Q256 I-17
Q257 F-21
Q258 F-20
Q260 B-15
Q261 B-16
Q262 B-16
Q263 G-23
Q264 G-19
Q278 D-13
Q281 D-16
Q282 D-16
Q285 G-19
Q286 G-20
Q288 E-7
Q289 E-9
Q300 G-24
Q401 H-9
Q470 H-27
Q471 H-20
Q485 C-8
Q491 D-18
Q492 D-18
Q493 E-18
Q500 E-23
Q501 E-23
Q502 D-23
Q600 B-3
Q601 B-3
Q603 B-3
Q604 B-2
Q605 C-2
Q606 H-7
Q698 B-28
Q701 J-8
Q702 J-7
Q704 J-22
Q705 J-22
Q706 J-23
Q707 I-6
Q708 I-23
Q708 I-22
Q710 J-4
Q711 J-23
Q712 I-4
Q714 J-23
Q715 K-5
Q717 I-22
Q777 H-17
Q785 K-18

RV201 I-7
RV202 I-8
RV203 I-7
RV204 I-8
RV205 K-13
RV206 J-13
RV207 J-13
RV208 J-13
RV209 E-8
RV210 J-11
RV212 E-9
RV216 J-7
RV217 D-10
RV218 D-10
RV601 B-2

RV602 B-4
RV603 C-2
RV604 B-2
RV701 J-9

TP001 H-11
TP003 E-13
TP202 F-6
TP203 F-5
TP206 G-3
TP207 F-5
TP210 E-7
TP211 I-12
TP213 I-10
TP219 J-12
TP220 J-12
TP230 J-9
TP232 C-13
TP235 J-7
TP236 J-12
TP237 H-13
TP240 I-9
TP443 E-10
TP600 B-3
TP601 C-2
TP604 C-2
TP609 C-3

SP-7 BOARD(COMPONENT SIDE)

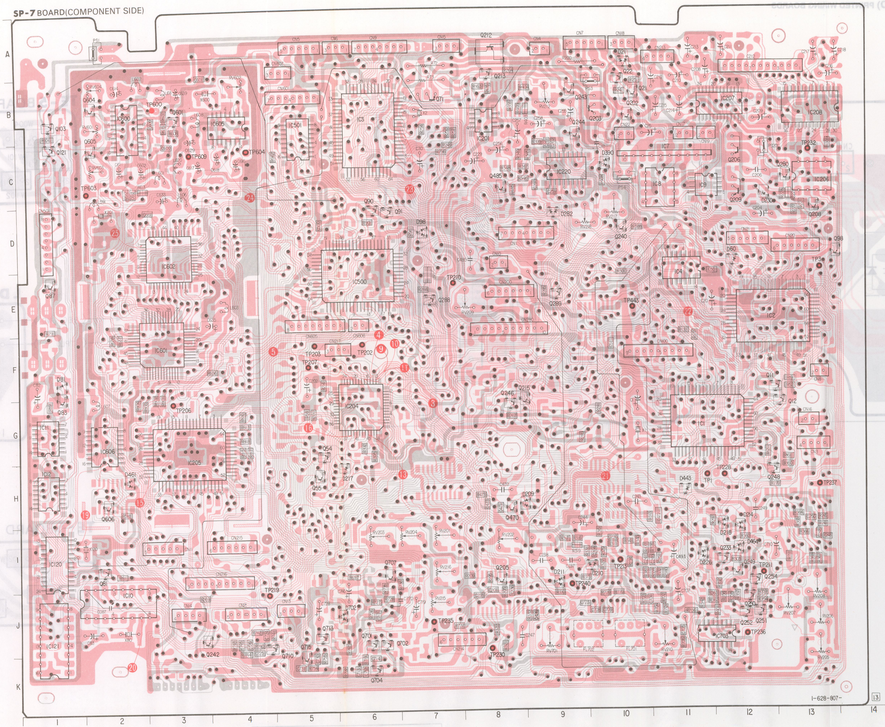

SP-7 BOARD(CONDUCTOR SIDE)

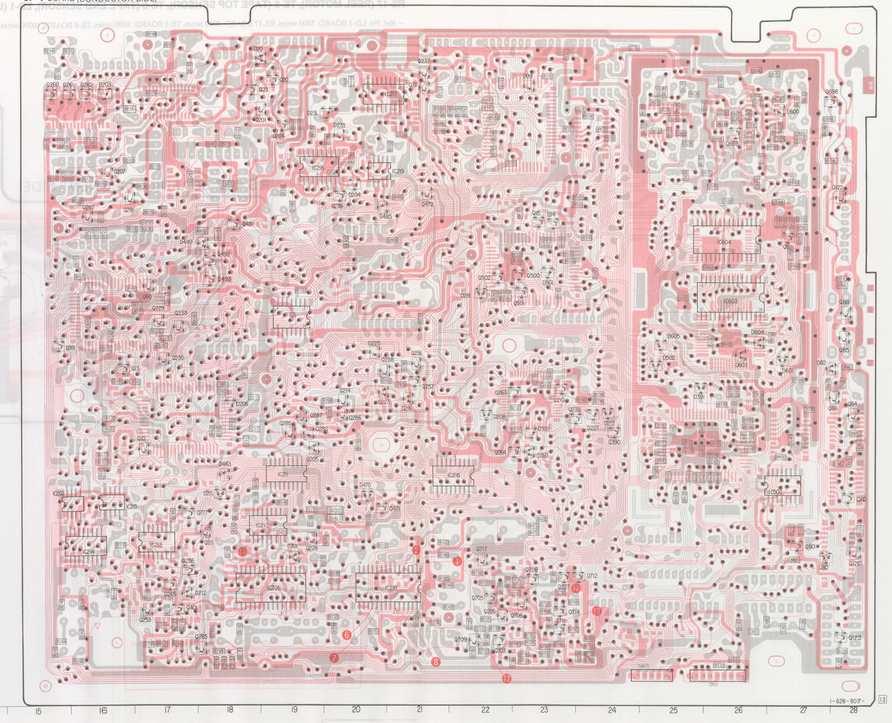

DM-18 BOARD

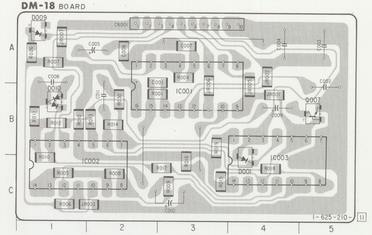

Caution:

Pattern face side: (Conductor Side) — Parts on the pattern face side seen from the pattern face are indicated.

Parts face side: (Component side) — Parts on the parts face side seen from the parts face are indicated.

RS-17 (REEL MOTOR), TE-5 (TAPE TOP SENSOR), TE-6 (TAPE END SENSOR), LD-1 (LED) PRINTED WIRING BOARDS

– Ref. No. LD-1 BOARD: 5000 series, RS-17 BOARD: 8000 series, TE-5 BOARD: 9000 series, TE-6 BOARD: 10000 series –

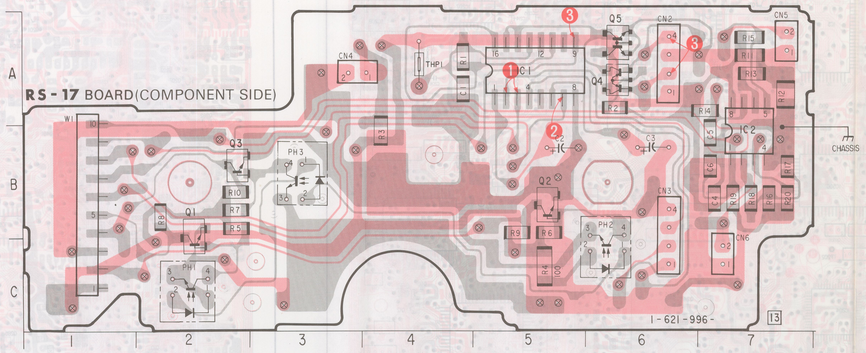

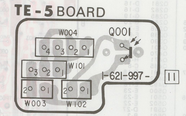

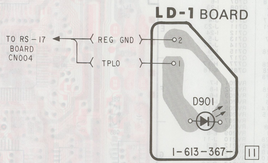

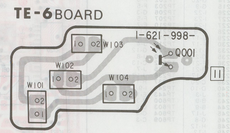

Caution:
Pattern face side: Parts on the pattern face side seen from (Conductor Side) the pattern face are indicated.
Parts face side: Parts on the parts face side seen from the (Component side) parts face are indicated.

RS-17 (REEL MOTOR), TE-5 (TAPE TOP SENSOR), TE-6 (TAPE END SENSOR), LD-1 (LED) SCHEMATIC DIAGRAMS

– Ref. No. LD-1 BOARD: 5000 series, RS-17 BOARD: 8000 series, TE-5 BOARD: 9000 series, TE-6 BOARD: 10000 series –

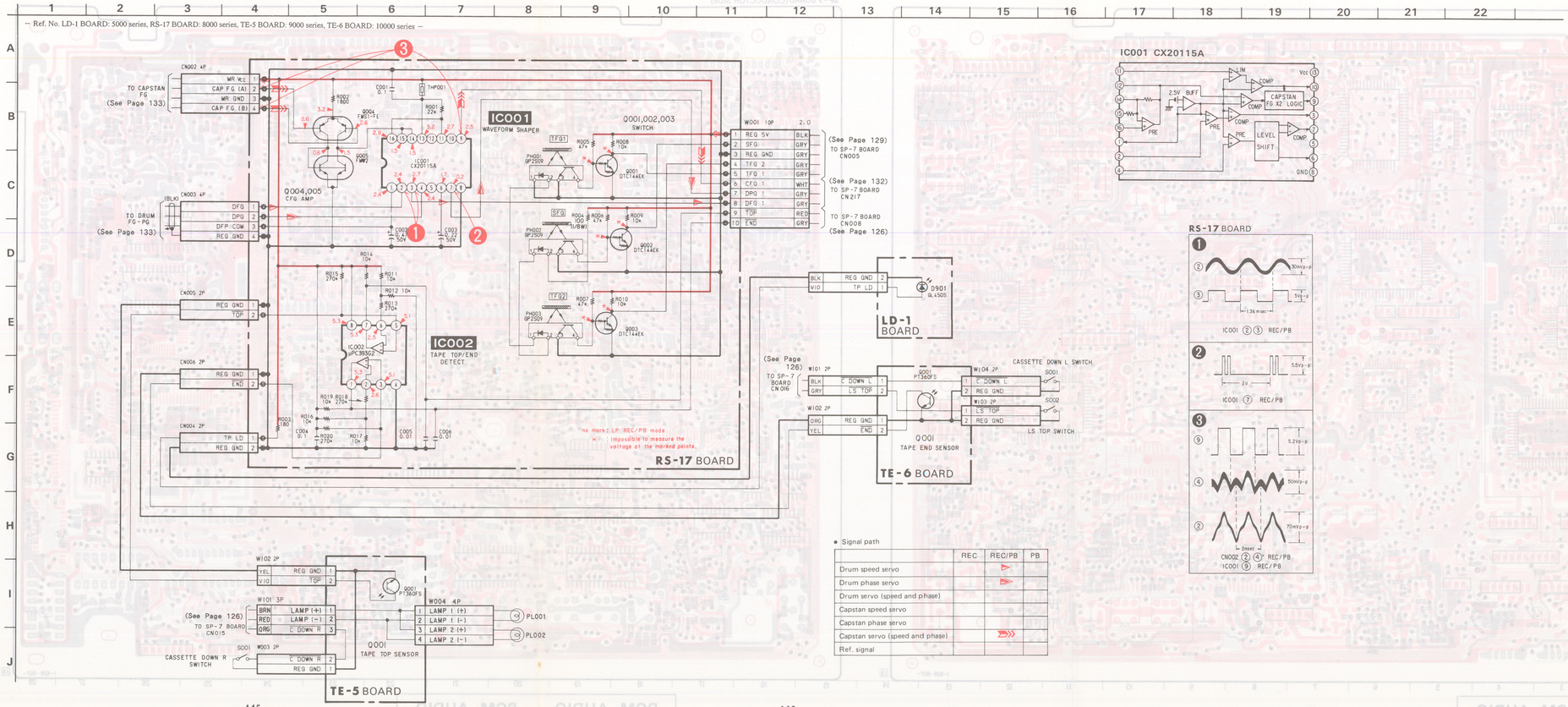

IC001 CX20115A

RS-17 BOARD

● Signal path

	REC	REC/PB	PB
Drum speed servo		▶	
Drum phase servo		▶	
Drum servo (speed and phase)			
Capstan speed servo			
Capstan phase servo			
Capstan servo (speed and phase)		▶	
Ref. signal			

SP-7 (PCM AUDIO) PRINTED WIRING BOARDS

– Ref. No. SP-7 BOARD: 5000 series –

SP-7 BOARD

CN001	D-9	IC121	J-1	Q256	I-17
CN002	J-4	IC201	B-8	Q257	F-21
CN003	G-13	IC202	H-16	Q258	F-20
CN004	A-9	IC204	G-6	Q260	B-15
CN005	A-5	IC205	G-3	Q261	B-16
CN006	A-6	IC206	C-13	Q262	B-16
CN007	A-10	IC207	B-12	Q263	G-23
CN008	F-13	IC208	B-13	Q264	G-23
CN009	A-8	IC210	J-21	Q278	G-19
CN010	D-8	IC211	H-19	Q280	C-13
CN011	I-3	IC212	I-19	Q281	D-16
CN012	K-26	IC213	I-17	Q282	D-16
CN013	J-5	IC214	I-16	Q285	G-19
CN014	J-3	IC215	H-16	Q286	G-20
CN015	A-7	IC216	H-22	Q288	E-7
CN016	G-13	IC217	B-21	Q289	E-9
CN017	B-11	IC218	C-19	Q390	G-24
CN018	A-10	IC219	C-20	Q401	J-17
CN019	B-11	IC220	C-9	Q470	H-8
CN020	D-13	IC500	E-6	Q471	H-20
CN021	D-12	IC501	B-6	Q485	C-8
CN022	B-10	IC502	H-27	Q491	D-18
CN100	F-11	IC600	B-2	Q492	D-18
CN200	E-8	IC601	F-3	Q493	E-18
CN212	A-12	IC602	D-3	Q500	E-23
CN213	A-11	IC604	D-26	Q501	E-23
CN214	J-7	IC605	B-4	Q502	E-22
CN215	I-4	IC606	G-2	Q591	D-27
CN216	I-4	IC701	J-19	Q601	B-3
CN217	F-6	IC703	J-12	Q603	B-3
CN280	E-8			Q604	B-2
CN501	D-1	Q010	G-11	Q605	C-2
CN601	B-5	Q011	D-12	Q606	H-2
CN603	K-25	Q012	G-13	Q698	B-28
CN605	E-5	Q013	F-16	Q701	J-6
CN606	E-5	Q014	D-23	Q702	J-5
CN607	A-5	Q015	D-23	Q703	I-22
		Q020	B-18	Q704	K-6
D020	A-18	Q021	B-10	Q705	J-22
D021	A-10	Q022	B-10	Q706	J-23
D060	D-12	Q023	B-18	Q707	I-6
D080	I-27	Q054	G-5	Q708	I-23
D081	F-1	Q055	H-5	Q709	I-22
D082	F-28	Q060	E-17	Q710	J-4
D098	D-7	Q070	B-21	Q711	J-23
D099	B-23	Q071	B-7	Q712	I-24
D120	G-27	Q080	I-27	Q713	J-5
D203	B-16	Q081	I-2	Q714	J-23
D204	C-20	Q082	F-28	Q715	K-5
D205	G-18	Q083	F-1	Q716	K-5
D206	G-18	Q084	G-28	Q717	I-22
D208	H-9	Q085	F-28	Q777	H-17
D209	I-10	Q086	G-28	Q785	K-18
D210	I-10	Q087	E-1		
D211	I-9	Q088	E-28	RV201	I-7
D212	J-17	Q090	D-8	RV202	I-8
D213	G-24	Q091	D-6	RV203	I-7
D214	I-12	Q098	D-14	RV204	I-8
D215	H-18	Q099	F-15	RV205	K-13
D216	G-21	Q103	B-1	RV206	J-13
D217	H-6	Q120	I-28	RV207	J-13
D218	I-2	Q121	C-1	RV208	J-13
D223	G-20	Q122	C-28	RV209	E-8
D225	F-20	Q123	J-28	RV210	J-11
D226	I-11	Q201	B-19	RV212	B-9
D227	G-24	Q202	B-10	RV215	J-7
D230	C-12	Q203	B-10	RV216	I-7
D231	B-20	Q204	B-19	RV217	D-10
D233	C-20	Q205	I-8	RV218	D-10
D280	G-19	Q206	C-12	RV650	B-2
D281	E-22	Q207	C-16	RV602	B-4
D282	D-8	Q208	D-13	RV603	C-2
D390	C-10	Q209	C-12	RV604	B-2
D391	F-25	Q210	G-23	RV701	J-9
D392	G-23	Q211	I-18		
D393	G-23	Q212	A-8	TP001	H-11
D443	H-11	Q213	A-8	TP003	E-13
D461	H-2	Q214	G-20	TP202	F-6
D463	H-18	Q215	G-9	TP203	F-5
D464	I-3	Q226	I-22	TP206	G-3
D470	H-20	Q227	I-23	TP207	F-5
D485	D-20	Q227	I-23	TP210	E-7
D490	D-18	Q228	I-18	TP211	I-12
D501	E-23	Q229	E-17	TP213	I-10
D502	F-25	Q230	F-17	TP219	J-4
D600	B-27	Q233	I-12	TP228	G-12
D601	F-27	Q235	G-24	TP230	J-8
D603	F-26	Q236	F-21	TP232	C-13
D604	F-26	Q237	B-21	TP235	J-7
D605	F-25	Q238	E-17	TP236	J-12
D701	I-19	Q239	C-20	TP237	H-13
D702	J-6	Q240	D-10	TP240	I-9
		Q242	J-3	TP443	E-10
IC001	G-11	Q243	B-9	TP600	B-3
IC002	D-12	Q244	B-9	TP603	C-2
IC003	B-5	Q245	J-17	TP604	C-4
IC004	E-11	Q248	G-8	TP609	C-3
IC005	E-19	Q248	H-12		
IC006	C-11	Q249	I-12		
IC007	C-11	Q250	J-12		
IC008	C-11	Q251	J-12		
IC009	C-11	Q252	J-12		
IC010	J-12	Q253	J-17		
IC011	H-11	Q254	I-12		
IC012	H-1				
IC120	I-1				

Caution:

Pattern face side: (Conductor Side) — Parts on the pattern face side seen from the pattern face are indicated.

Parts face side: (Component side) — Parts on the parts face side seen from the parts face are indicated.

SP-7 BOARD (COMPONENT SIDE)

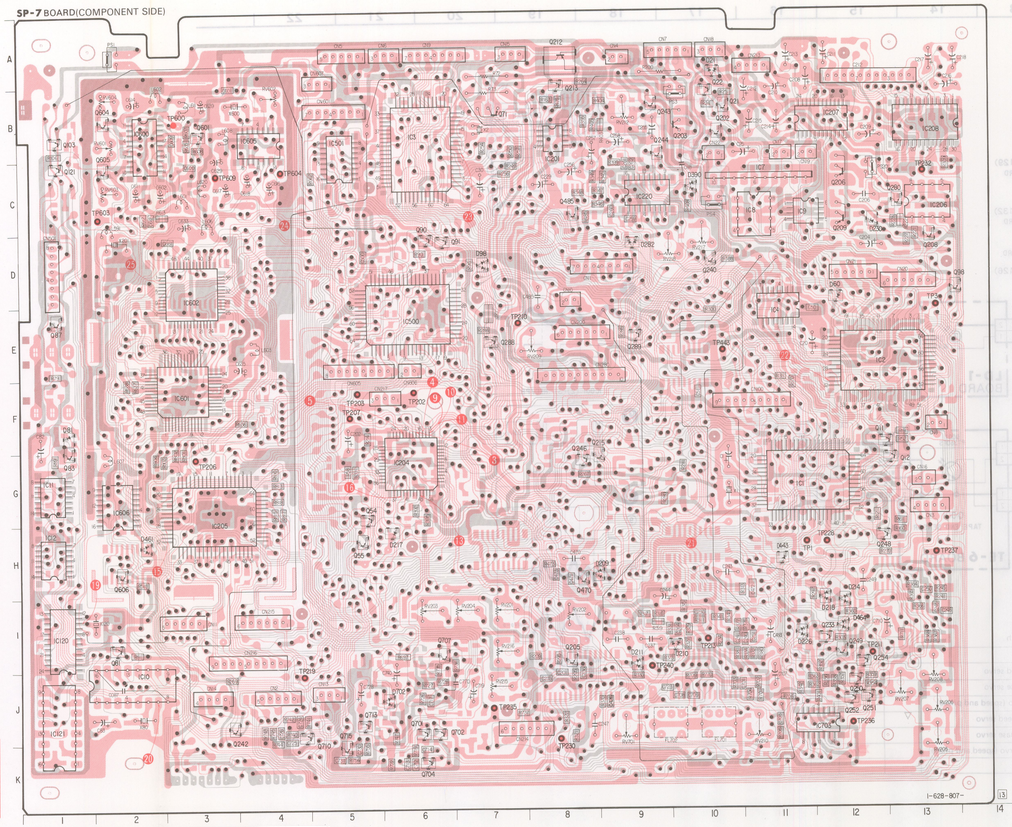

I-628-807-

SP-7 BOARD (CONDUCTOR SIDE)

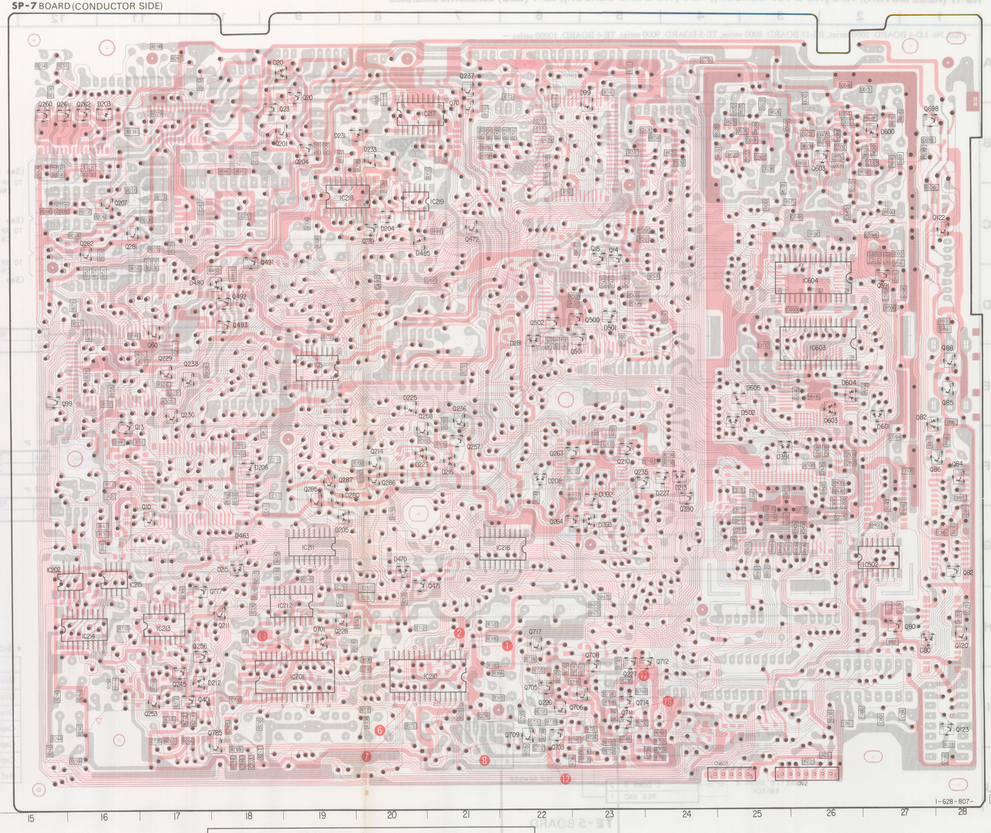

I-628-807-

– Ref. No. SP-7 BOARD: 5000 series –

SP-7 BOARD(1/3) PCM

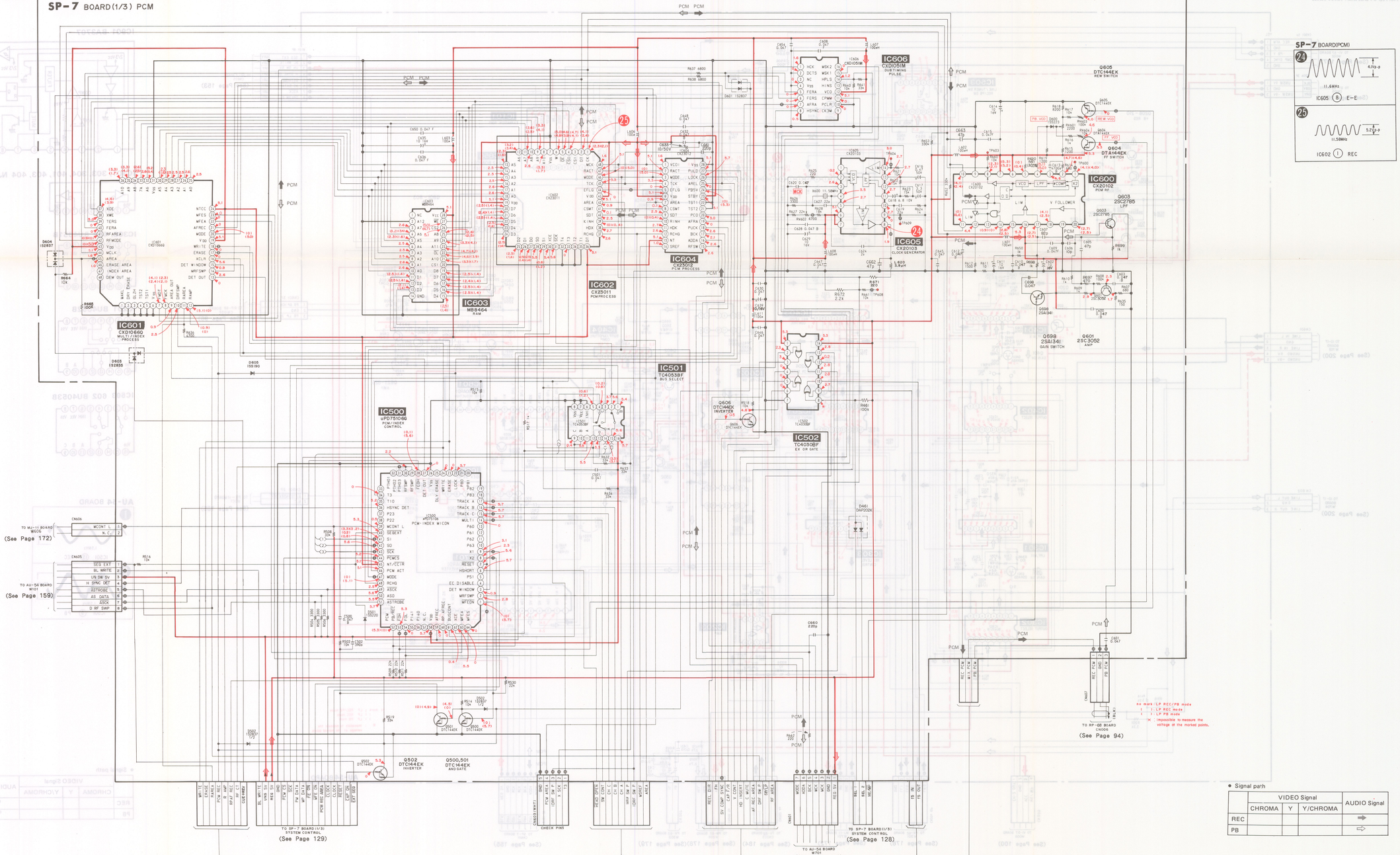

• Signal path

	VIDEO Signal			AUDIO Signal
	CHROMA	Y	Y/CHROMA	
REC				➡
PB				⇨

AU-54 (AUDIO) SCHEMATIC DIAGRAMS

– Ref. No. AU-54 BOARD: 12000 series –

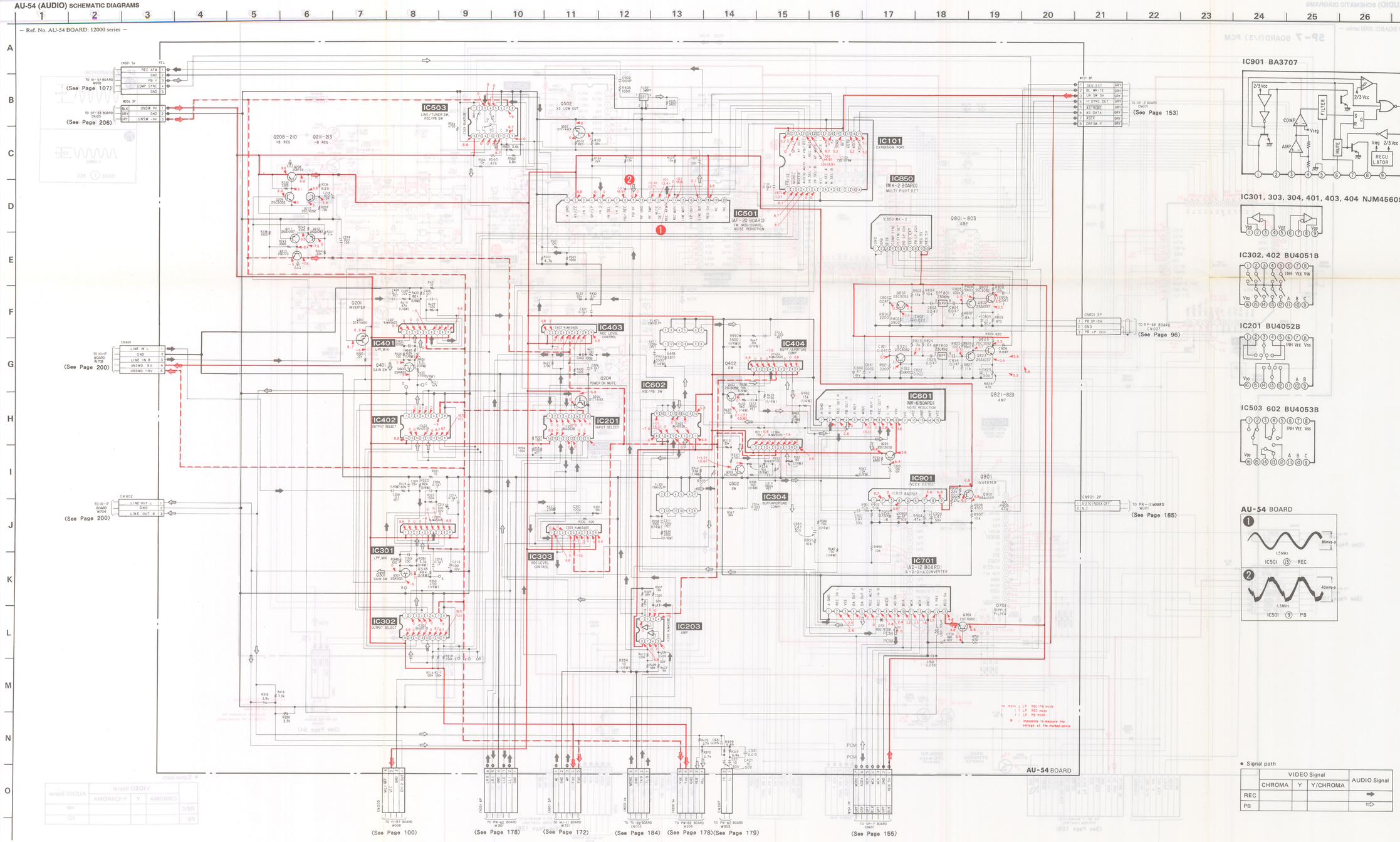

IC901 BA3707

IC301, 303, 304, 401, 403, 404 NJM4560S

IC302, 402 BU4051B

IC201 BU4052B

IC503 602 BU4053B

AU-54 BOARD

• Signal path

	VIDEO Signal			AUDIO Signal
	CHROMA	Y	Y/CHROMA	
REC				➡
PB				⇨

AU-54 (AUDIO) PRINTED WIRING BOARDS

– Ref. No. AU-54 BOARD: 12000 series –

AU-54 BOARD

CN201	A-7
CN202	A-6
CN204	A-8
CN205	A-10
CN207	A-5
CN208	A-8
CN501	H-10
CN601	E-11
CN602	B-11
CN801	C-1
CN901	I-2
D701	B-4
IC101	H-4
IC201	E-7
IC203	C-6
IC301	D-9
IC302	B-8
IC303	D-8
IC304	E-2
IC401	F-9
IC402	E-8
IC403	F-7
IC404	F-3
IC501	I-7
IC503	H-7
IC601	F-3
IC602	E-4
IC701	A-2
IC850	G-3
IC901	H-2
Q201	F-10
Q203	E-2
Q204	F-6
Q208	H-11
Q209	I-11
Q210	I-11
Q211	H-11
Q212	H-11
Q213	G-11
Q301	C-9
Q302	E-3
Q401	E-10
Q402	F-5
Q502	H-6
Q701	B-4
Q801	B-2
Q802	G-2
Q803	G-2
Q821	B-2
Q822	D-1
Q823	E-1
Q901	H-2

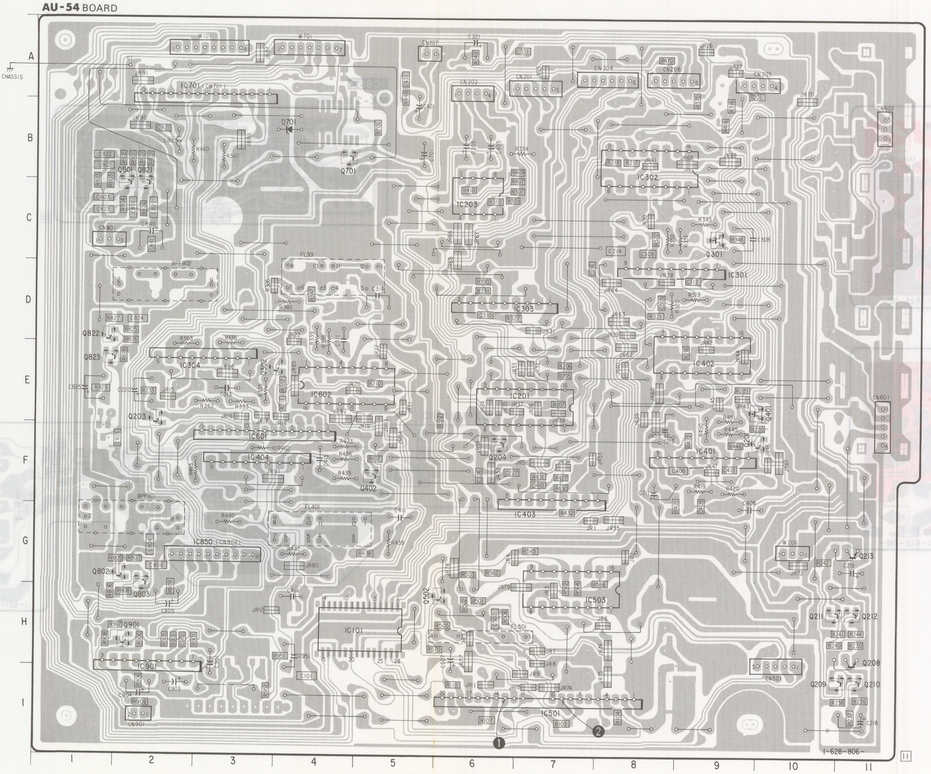

NR-6 (NOISE REDUCTION), MK-2 (MULTI PILOT DETECTION) ,AD-12 (A-D/D-A CONVERTER), MJ-11 (MIC JACK) PRINTED WIRING BOARDS

– Ref. No. NR-6, MK-2, AD-12, MJ-11 BOARDS: 6000 series –

IC701
AD-12 BOARD (COMPONENT SIDE)

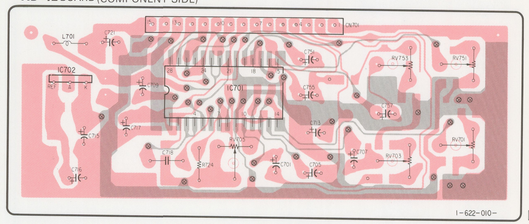

IC701
AD-12 BOARD (CONDUCTOR SIDE)

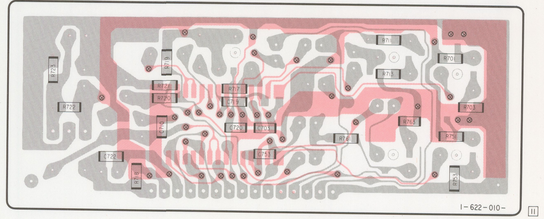

Caution:

Pattern face side: (Conductor Side)	Parts on the pattern face side seen from the pattern face are indicated.
Parts face side: (Component side)	Parts on the parts face side seen from the parts face are indicated.

IC601
NR-6 BOARD (COMPONENT SIDE)

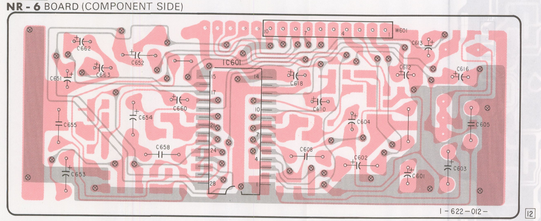

IC601
NR-6 BOARD (CONDUCTOR SIDE)

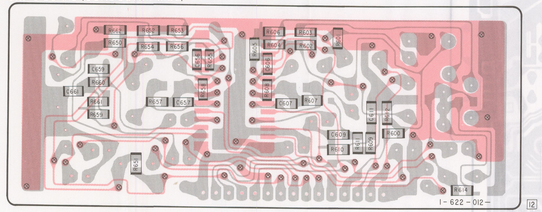

IC850
MK-2 BOARD

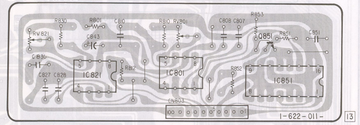

MJ-11 BOARD

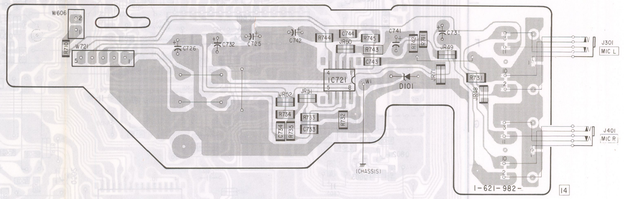

NR-6 (NOISE REDUCTION), MK-2 (MULTI PILOT DETECTION) ,AD-12 (A-D/D-A CONVERTER), MJ-11 (MIC JACK) SCHEMATIC DIAGRAMS

– Ref. No. NR-6, MK-2, AD-12, MJ-11 BOARDS: 6000 series –

AD-12 BOARD

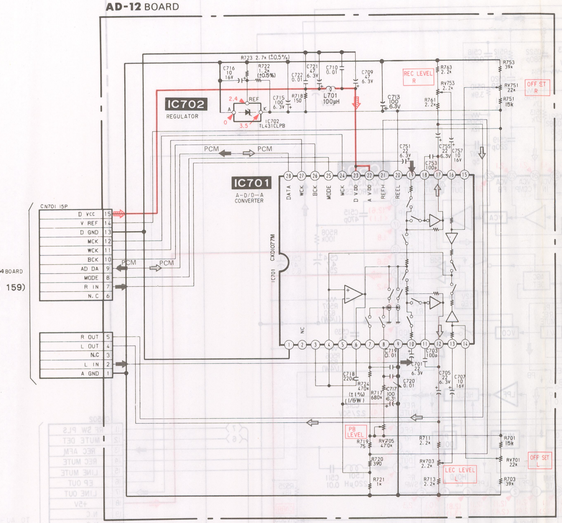

MK-2 BOARD

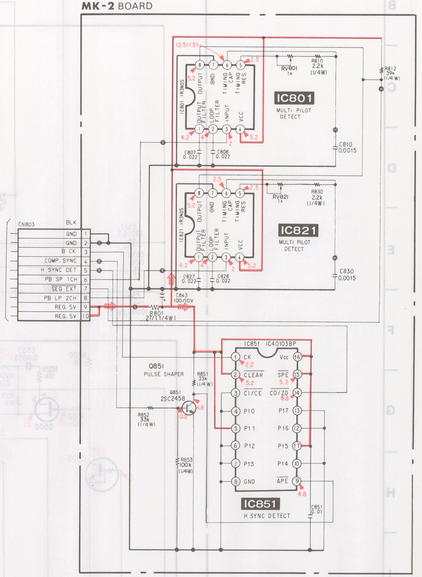

NR-6 BOARD

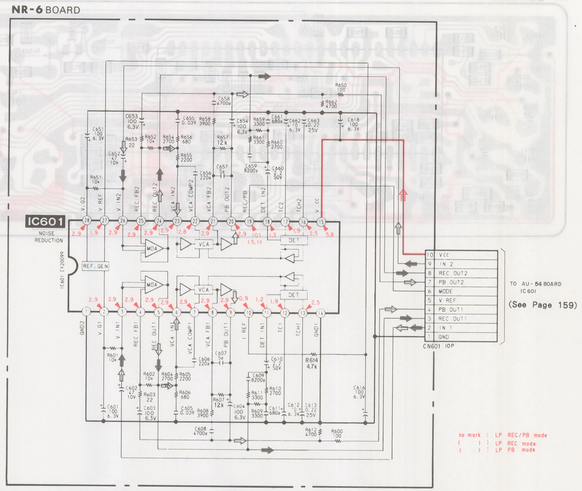

MJ-11 BOARD

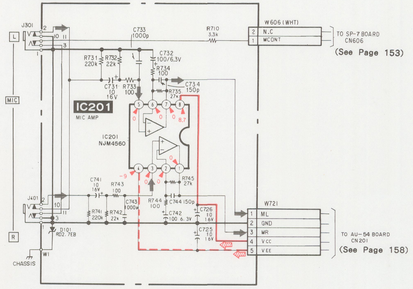

● Signal path

	VIDEO Signal			AUDIO Signal
	CHROMA	Y	Y/CHROMA	
REC				➡
PB				

AF-20 (AFM PROCESS) PRINTED WIRING BOARDS

– Ref. No. AF-20 BOARD: 6000 series –

IC501
AF-20 BOARD

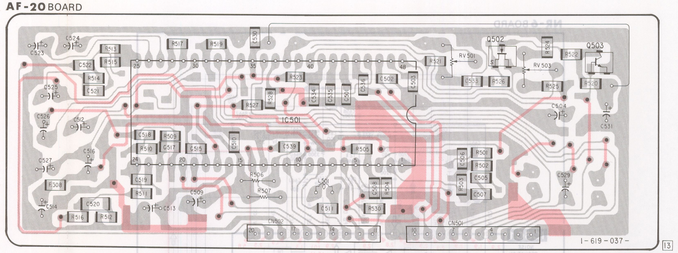

Caution:

Pattern face side: (Conductor Side) — Parts on the pattern face side seen from the pattern face are indicated.

Parts face side: (Component side) — Parts on the parts face side seen from the parts face are indicated.

● Signal path

	VIDEO Signal			AUDIO Signal
	CHROMA	Y	Y/CHROMA	
REC				➡
PB				⇨

AF-20 (AFM PROCESS) SCHEMATIC DIAGRAMS

– Ref. No. AF-20 BOARD: 6000 series –

IC501
AF-20 BOARD

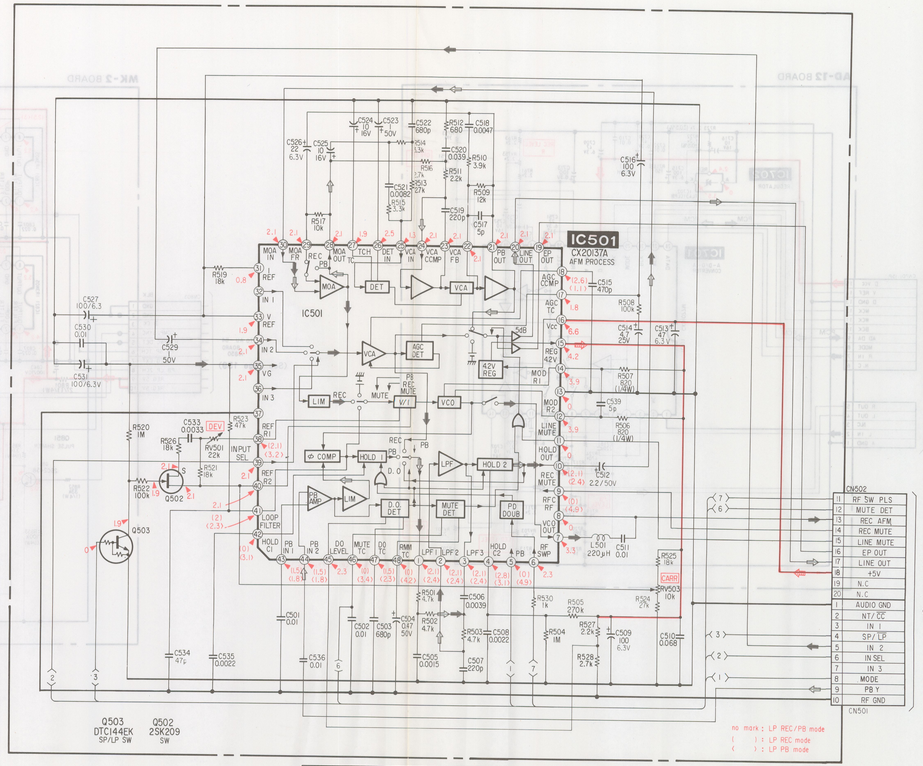

PW-62 (LEVEL METER/VOLUME/JACK/REMOTE CONTROL REDEIVER) PRINTED WIRING BOARDS

– Ref. No. PW-62 BOARD: 6000 series –

PW-62 BOARD

CN202 C-1

D101 A-8
D103 B-8
D104 C-8
D105 C-8
D201 C-2
D202 C-1
D203 C-1

IC101 C-7
IC201 C-7

RV201 B-8
RV301 D-4

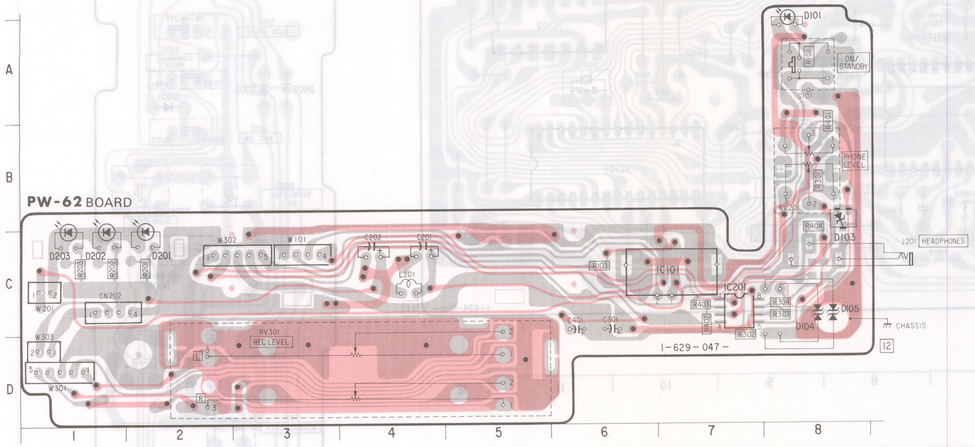

Caution:

Pattern face side: (Conductor Side) — Parts on the pattern face side seen from the pattern face are indicated.

Parts face side: (Component side) — Parts on the parts face side seen from the parts face are indicated.

PW-62 (LEVEL METER/VOLUME/JACK/REMOTE CONTROL REDEIVER) SCHEMATIC DIAGRAMS

– Ref. No. PW-62 BOARD: 6000 series –

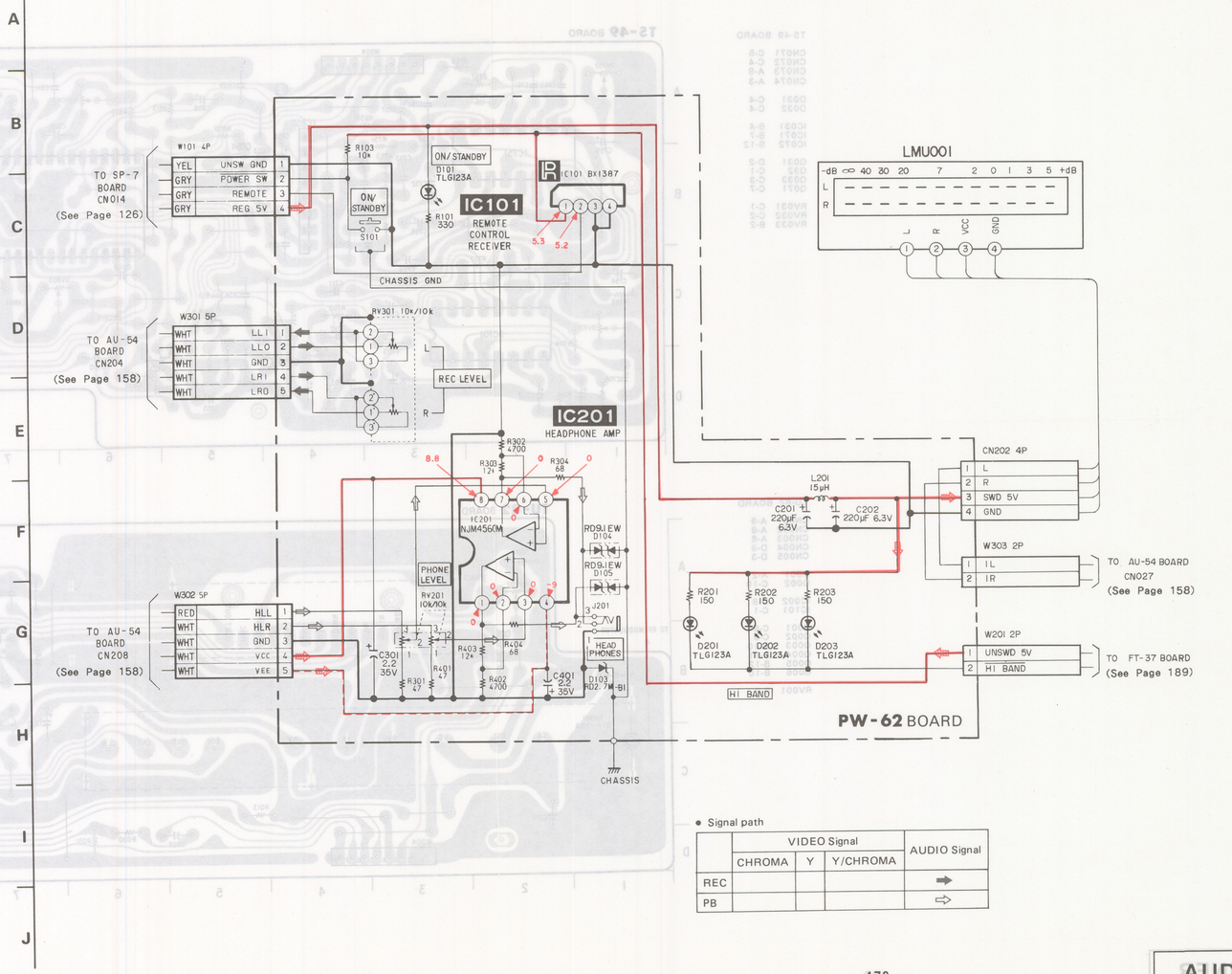

● Signal path

	VIDEO Signal			AUDIO Signal
	CHROMA	Y	Y/CHROMA	
REC				➡
PB				⇨

TU-82 (TUNER/VIF/SIF), TS-49 (TUNER CONTROL), PR-12 (TUNER PRESET SWITCH) PRINTED WIRING BOARDS

– Ref. No. TU-82, TS-49 BOARDS: 12000 series, PR-12 BOARD: 13000 series –

TS-49 BOARD

CN071 C-5
CN072 C-4
CN073 A-9
CN074 A-3

D031 C-4
D032 C-4

IC031 B-4
IC071 B-7
IC072 B-12

Q031 D-2
Q32 C-1
Q033 C-3
Q071 C-7

RV031 C-1
RV032 C-2
RV033 B-2

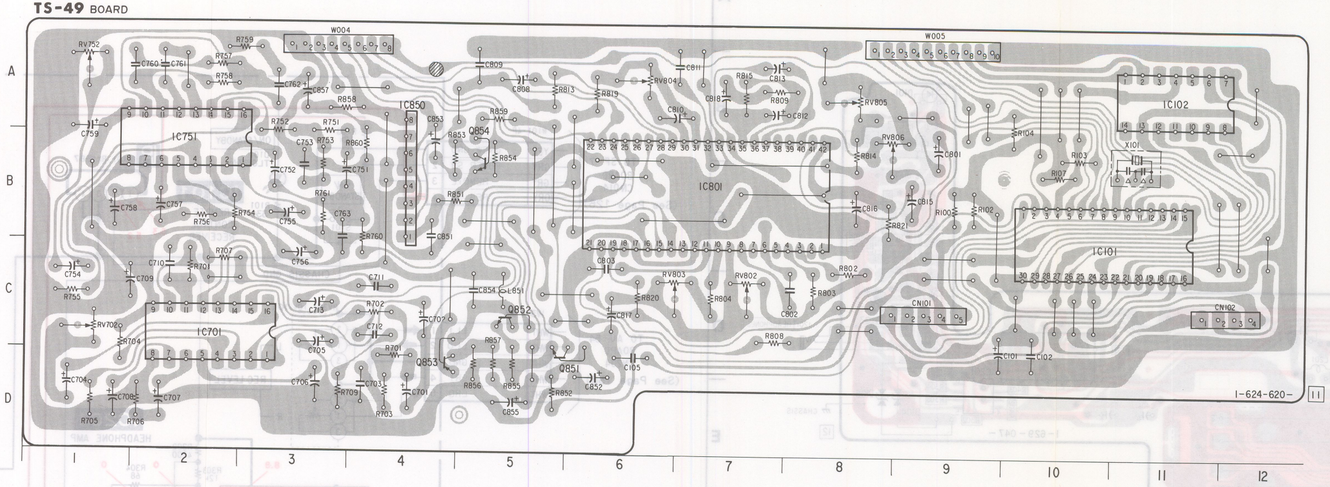

TU-82 BOARD

CN001 A-9
CN002 A-8
CN003 A-8
CN004 D-9
CN005 D-3

D001 A-2
D002 C-10

IC002 D-8
IC101 C-1

Q001 C-9
Q002 C-9
Q003 A-10
Q004 B-11
Q005 B-12
Q006 B-10

RV001 B-2

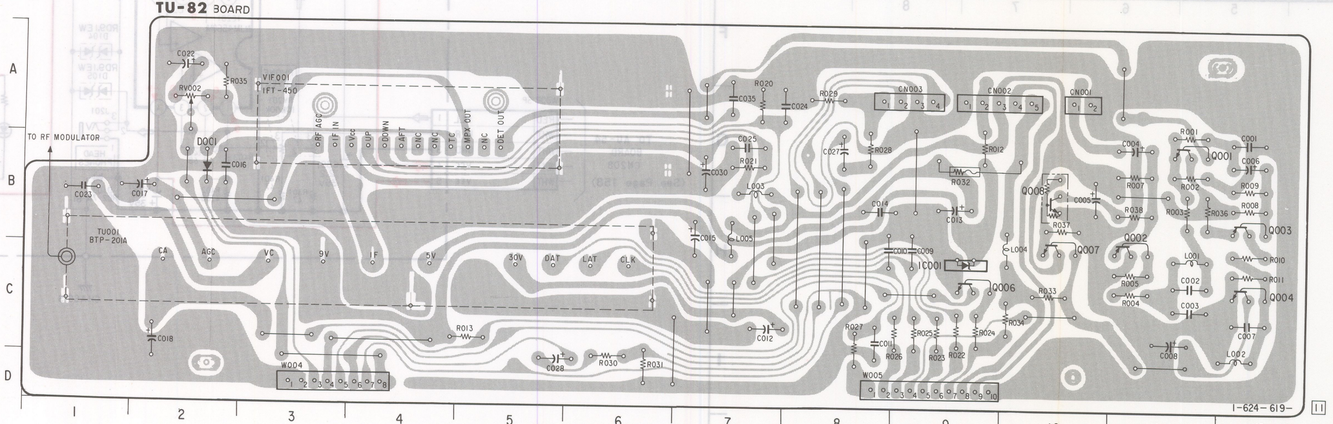

PR-12 BOARD

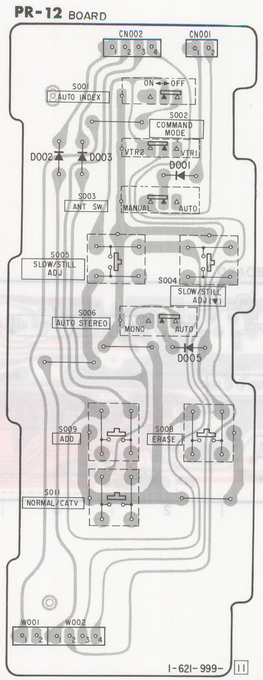

PW-62 (LEVEL METER/VOLUME/JACK/REMOTE CONTROL REDEIVER) PRINTED WIRING BOARDS

– Ref. No. PW-62 BOARD: 6000 series –

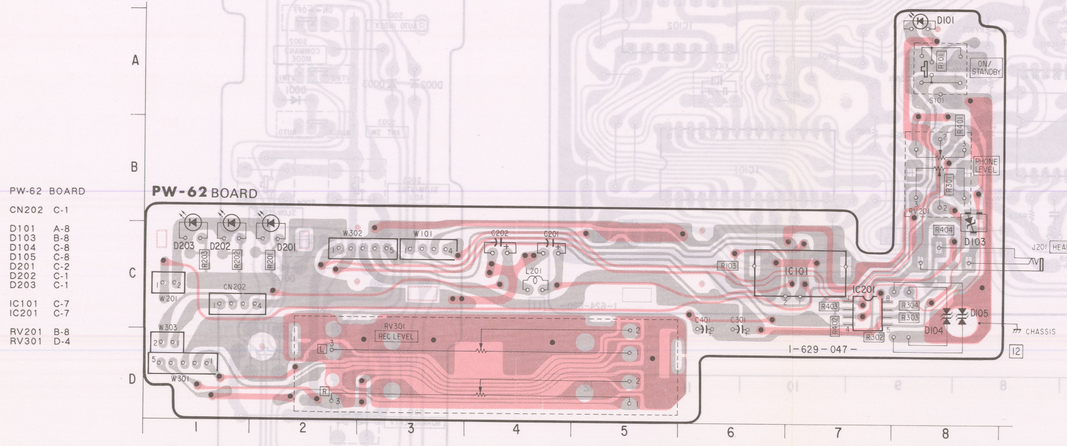

TU-82 (TUNER/VIF/SIF), TS-49 (TUNER CONTROL), PR-12 (TUNER PRESET SWITCH) PRINTED WIRING BOARDS

– Ref. No. TU-82, TS-49 BOARDS: 12000 series, PR-12 BOARD: 13000 series –

TS-49 BOARD

CN071 C-5
CN072 C-4
CN073 A-9
CN074 A-3

D031 C-4
D032 C-4

IC031 B-4
IC071 B-7
IC072 B-12

Q031 D-2
Q32 C-1
Q033 C-3
Q071 C-7

RV031 C-1
RV032 C-2
RV033 B-2

TU-82 BOARD

CN001 A-9
CN002 A-8
CN003 A-8
CN004 D-9
CN005 D-3

D001 A-2
D002 C-10

IC002 D-8
IC101 C-1

Q001 C-9
Q002 C-9
Q003 A-10
Q004 B-11
Q005 B-12
Q006 B-10

RV001 B-2

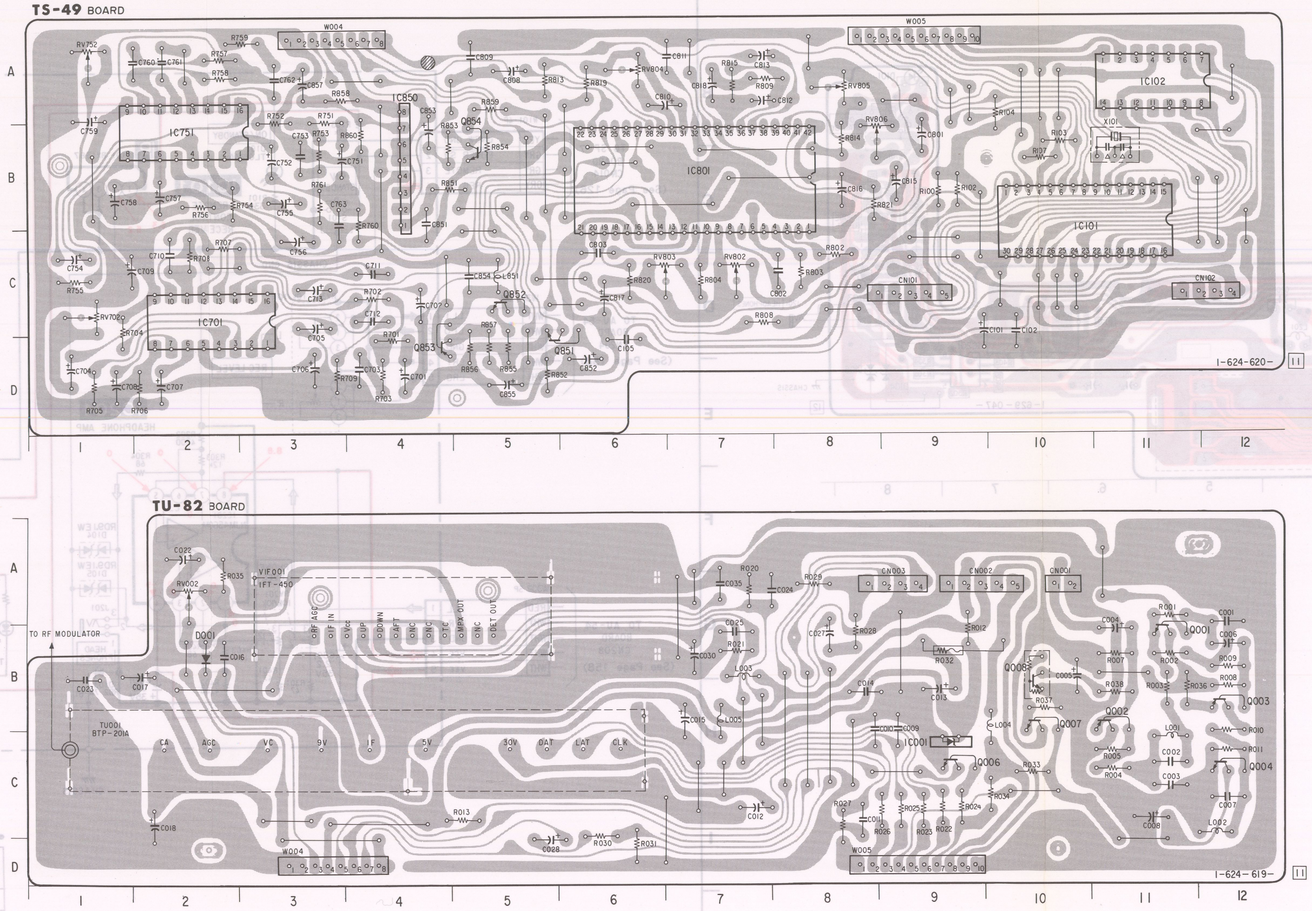

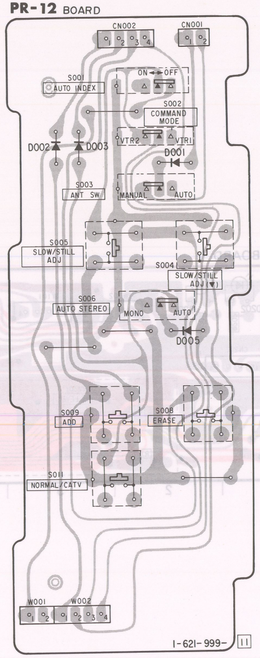

— Ref. No. TU-82, TS-49 BOARDS: 12000 series, PR-12 BOARD: 13000 series —

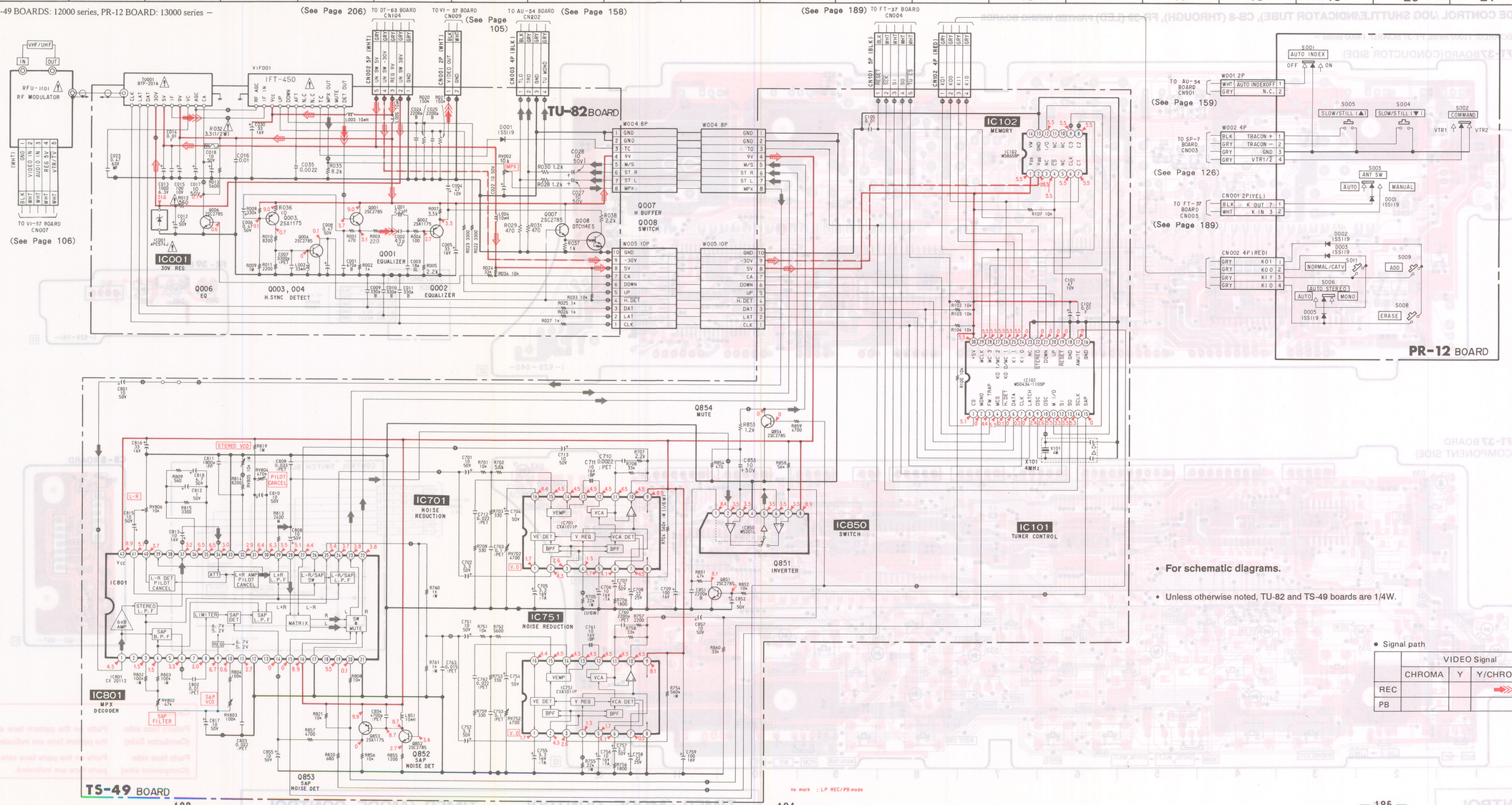

- **For schematic diagrams.**
- Unless otherwise noted, TU-82 and TS-49 boards are 1/4W.

- Signal path

	VIDEO Signal			AUDIO Signal
	CHROMA	Y	Y/CHROMA	
REC			⋙	→
PB				

no mark : LP REC/PB mode

FT-37 (TIMER/MODE CONTROL /JOG SHUTTLE/INDICATOR TUBE), CB-8 (THROUGH), FR-39 (LED) PRINTED WIRING BOARDS

– Ref. No. CB-8, FR-39 BOARDS: 11000 series, FT-37 BOARD: 14000 series –

FT-37 BOARD	
CN011	H-1
CV001	F-12
D001	B-3
D002	B-5
D003	B-5
D004	B-5
D005	B-5
D006	B-4
D007	B-4
D008	A-1
D009	A-5
D010	A-6
D011	F-11
D012	F-11
D013	F-11
D018	C-2
D019	C-2
D021	H-1
D024	C-4
D025	A-6
D026	A-5
D028	H-4
D029	H-4
D030	H-4
D032	H-7
D033	H-2
D034	H-5
D035	H-4
D036	H-9
D037	H-10
D038	H-8
D039	F-1
D040	H-1
D041	I-4
D042	F-12
D043	F-12
D044	F-12
D045	G-12
IC001	C-6
IC002	D-10
IC003	F-9
IC004	G-11
IC005	D-4
IC006	C-8
IC007	F-3
Q001	C-12
Q002	C-1
RV001	H-7

FT-37 BOARD (CONDUCTOR SIDE)

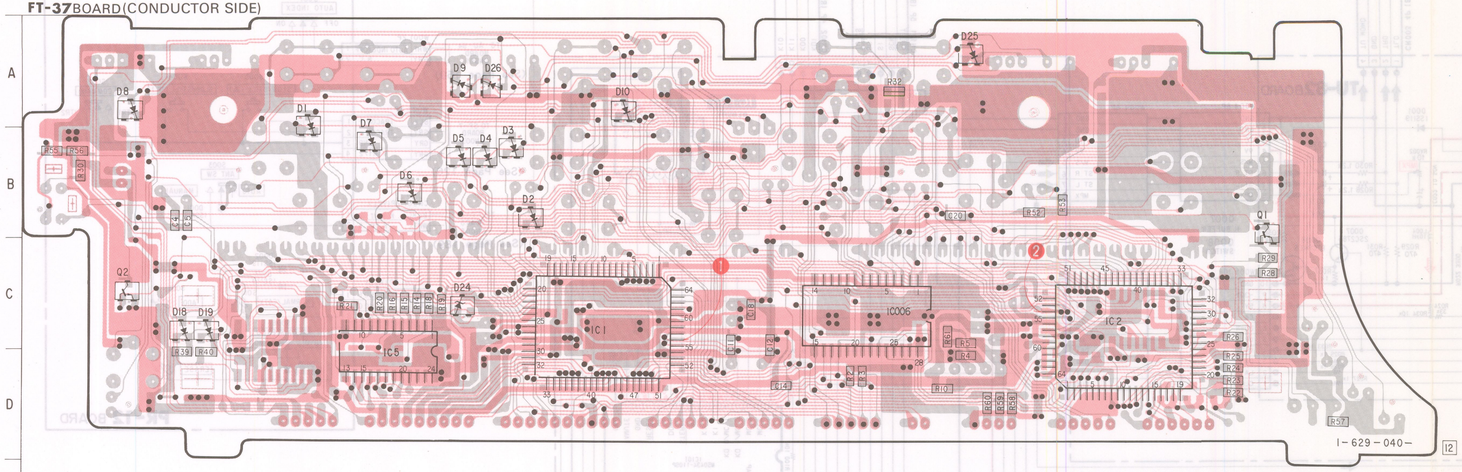

JOG/SHUTTLE BLOCK

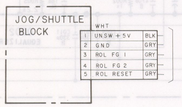

FR-39 BOARD

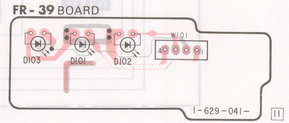

FT-37 BOARD (COMPONENT SIDE)

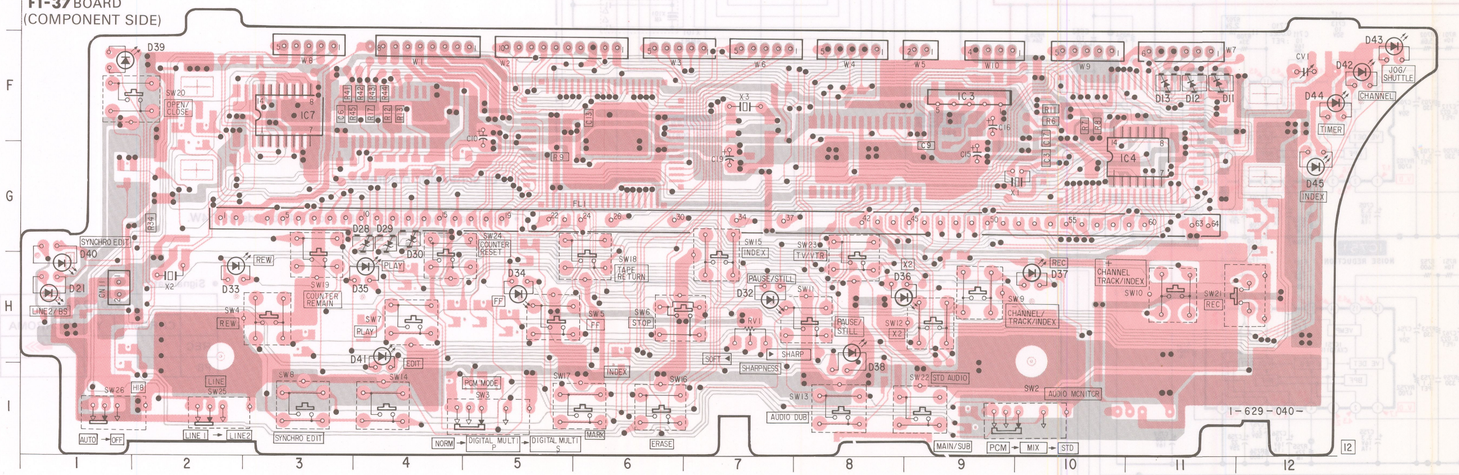

CONTROL SWITCH BLOCK

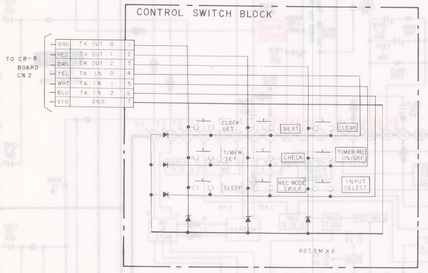

CB-8 BOARD

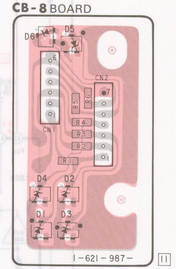

Caution:

Pattern face side: (Conductor Side) — Parts on the pattern face side seen from the pattern face are indicated.

Parts face side: (Component side) — Parts on the parts face side seen from the parts face are indicated.

FT-37 (TIMER/MODE CONTROL /JOG SHUTTLE/INDICATOR TUBE), CB-8 (THROUGH), FR-39 (LED) SCHEMATIC DIAGRAMS

– Ref. No. CB-8, FR-39 BOARDS: 11000 series, FT-37 BOARD: 14000 series –

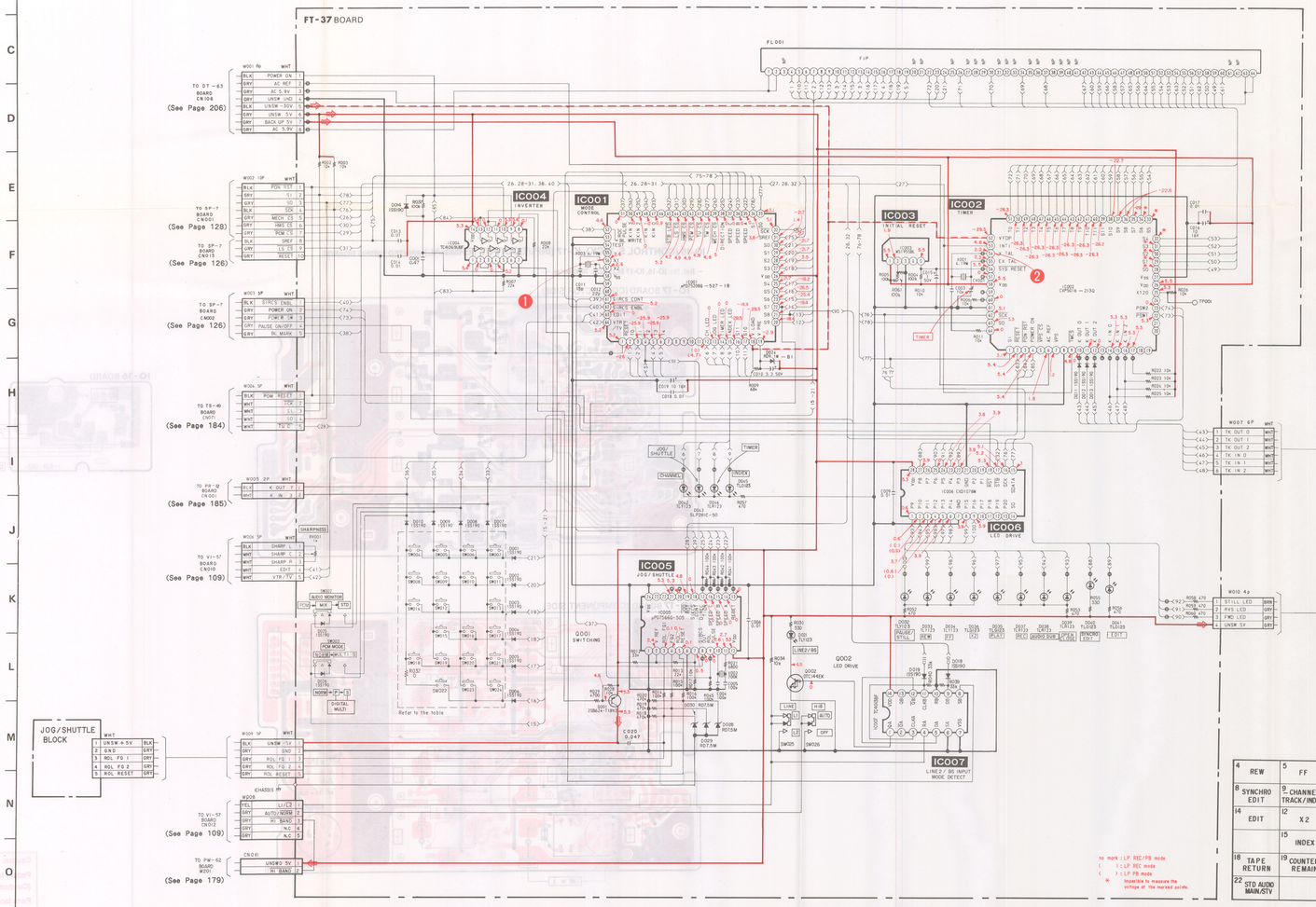

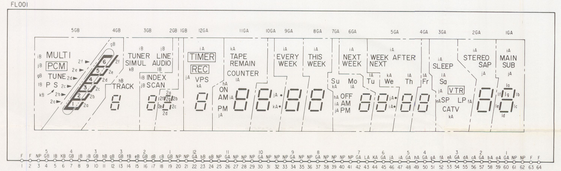

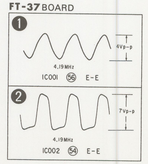

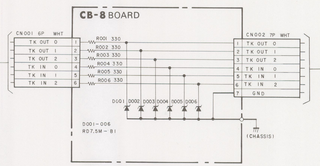

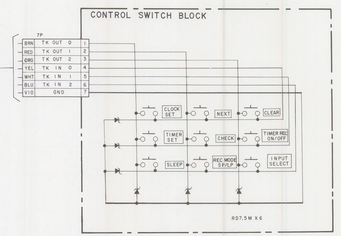

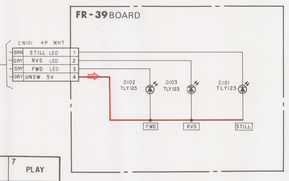

4 REW	5 FF	6 STOP	7 PLAY	
8 SYNCHRO EDIT	9 CHANNEL I TRACK/INDEX	10 CHANNEL I TRACK/INDEX	11 PAUSE/ STILL	
14 EDIT	12 X2		13 AUDIO DUB	
	15 INDEX	16 INDEX ERASE	17 INDEX MARK	
18 TAPE RETURN	19 COUNTER REMAIN	20 OPEN/ CLOSE	21 REC	
22 STD AUDIO MAIN/STV		23 TV/VTR	24 COUNTER RESET	

IO-16 (CONTROL S JACK), IO-17 (INPUT/OUTPUT TERMINAL) PRINTED WIRING BOARDS

– Ref. No. IO-16, IO-17 BOARDS: 7000 series –

IO-17 BOARD (CONDUCTOR SIDE)

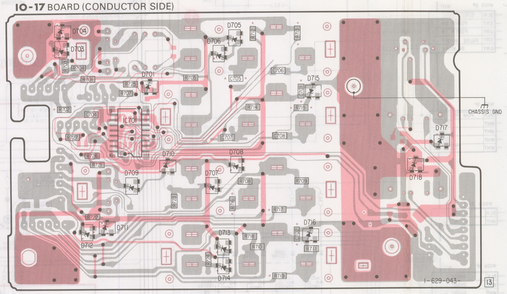

IO-16 BOARD

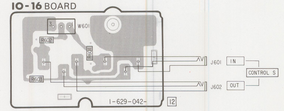

IO-17 BOARD (COMPONENT SIDE)

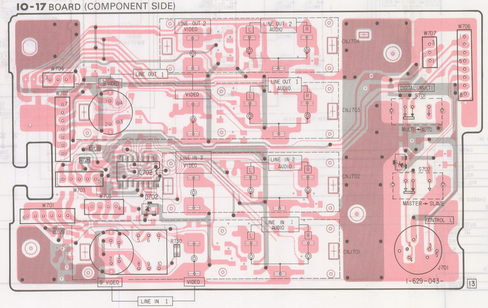

Caution:

Pattern face side: (Conductor Side)	Parts on the pattern face side see the pattern face are indicated.
Parts face side: (Component side)	Parts on the parts face side seen fr parts face are indicated.

IO-16 (CONTROL S JACK), IO-17 (INPUT/OUTPUT TERMINAL) SCHEMATIC DIAGRAMS

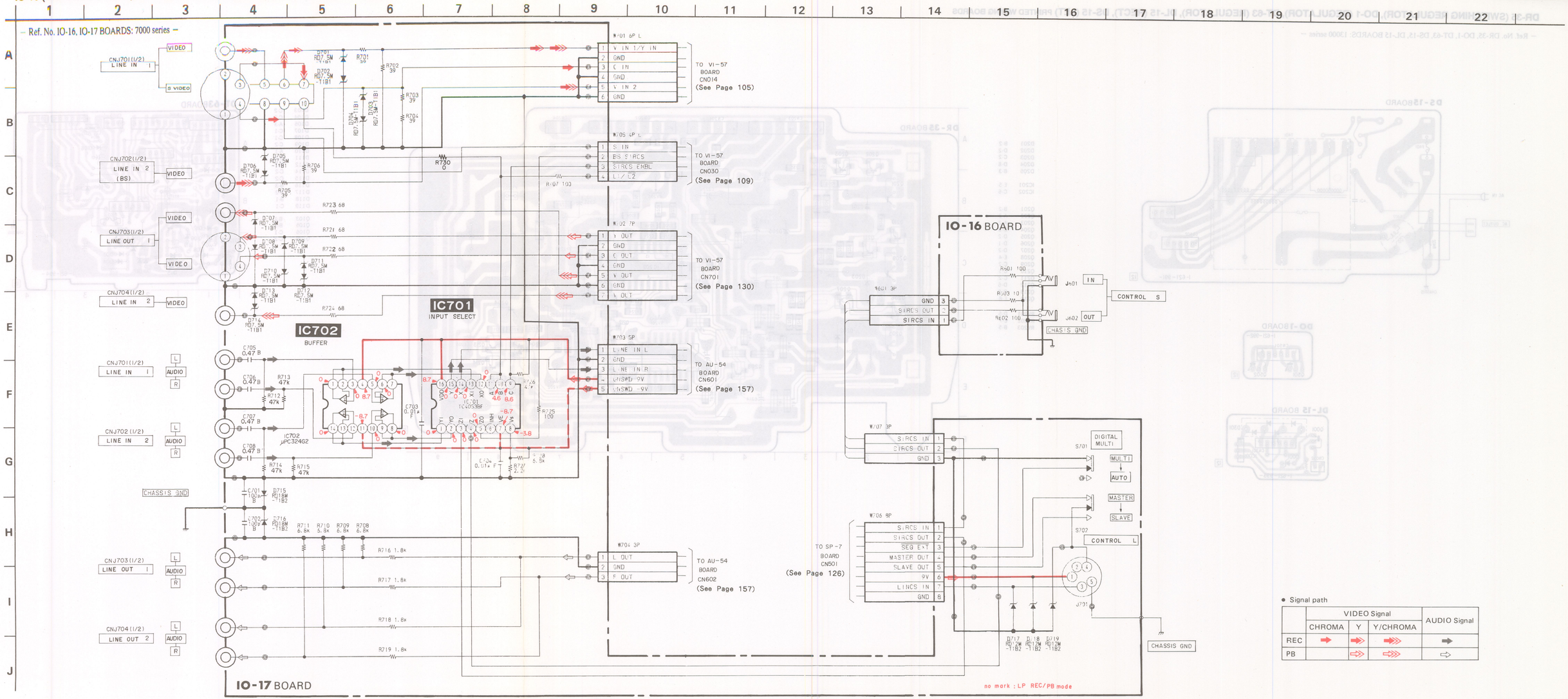

● Signal path

	VIDEO Signal			AUDIO Signal
	CHROMA	Y	Y/CHROMA	
REC	➡	⇒	⇛	➡
PB		⇨	⇨	⇨

DR-35 (SWITCHING REGULATOR), DO-1 (REGULATOR), DT-63 (REGULATOR), DL-15 (RECT), DS-15 (LET) PRINTED WIRING BOARDS

– Ref. No. DR-35, DO-1, DT-63, DS-15, DL-15 BOARDS: 13000 series –

DS-15 BOARD

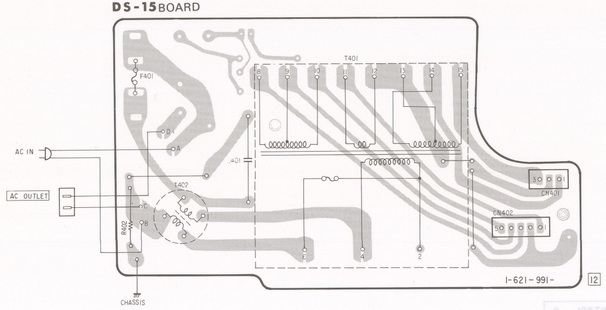

DO-1 BOARD

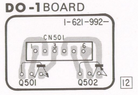

DL-15 BOARD

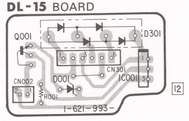

D201	B-2
D202	D-2
D203	C-2
D204	D-8
D205	B-3
IC201	E-5
IC202	C-6
Q201	B-2
Q202	A-2
Q203	A-2
Q204	D-8
Q205	D-2
Q206	D-1
Q207	D-2
Q208	E-4
Q209	C-2
Q210	C-1
Q211	C-2
Q212	D-6
Q213	D-8
Q214	E-8
RV201	D-5
RV202	E-7
RV203	B-5

DR-35 BOARD

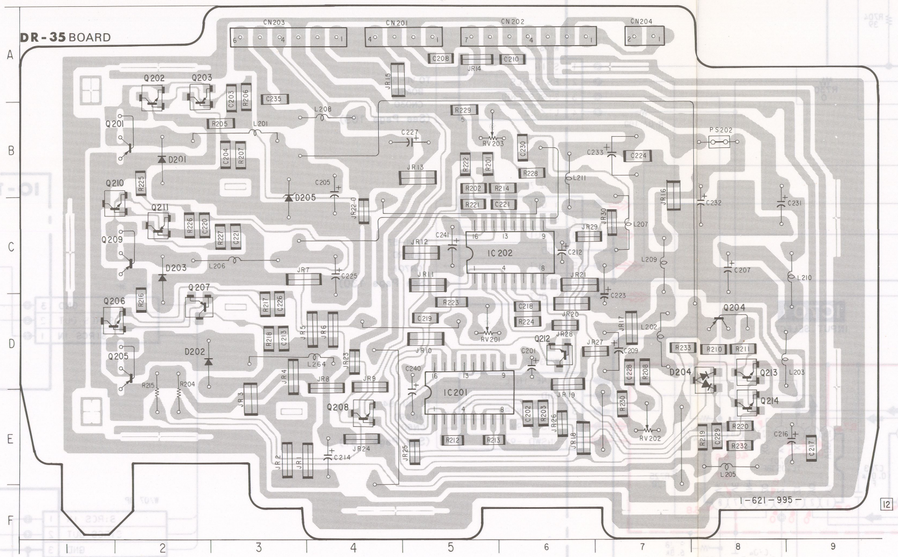

D103	C-2
D104	C-2
D106	A-3
D107	C-1
D108	C-1
D109	C-2
D110	A-1
D111	C-2
D112	B-1
D114	C-2
D115	C-2
D116	B-3
D117	C-2
D118	B-1
D119	C-1
Q103	B-2
Q105	B-1
Q106	C-1
Q109	C-2

DT-63 BOARD

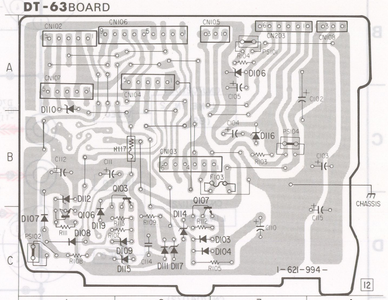

— Ref. No. DR-35, DO-1, DT-63, DS-15, DL-15 BOARDS: 13000 series —

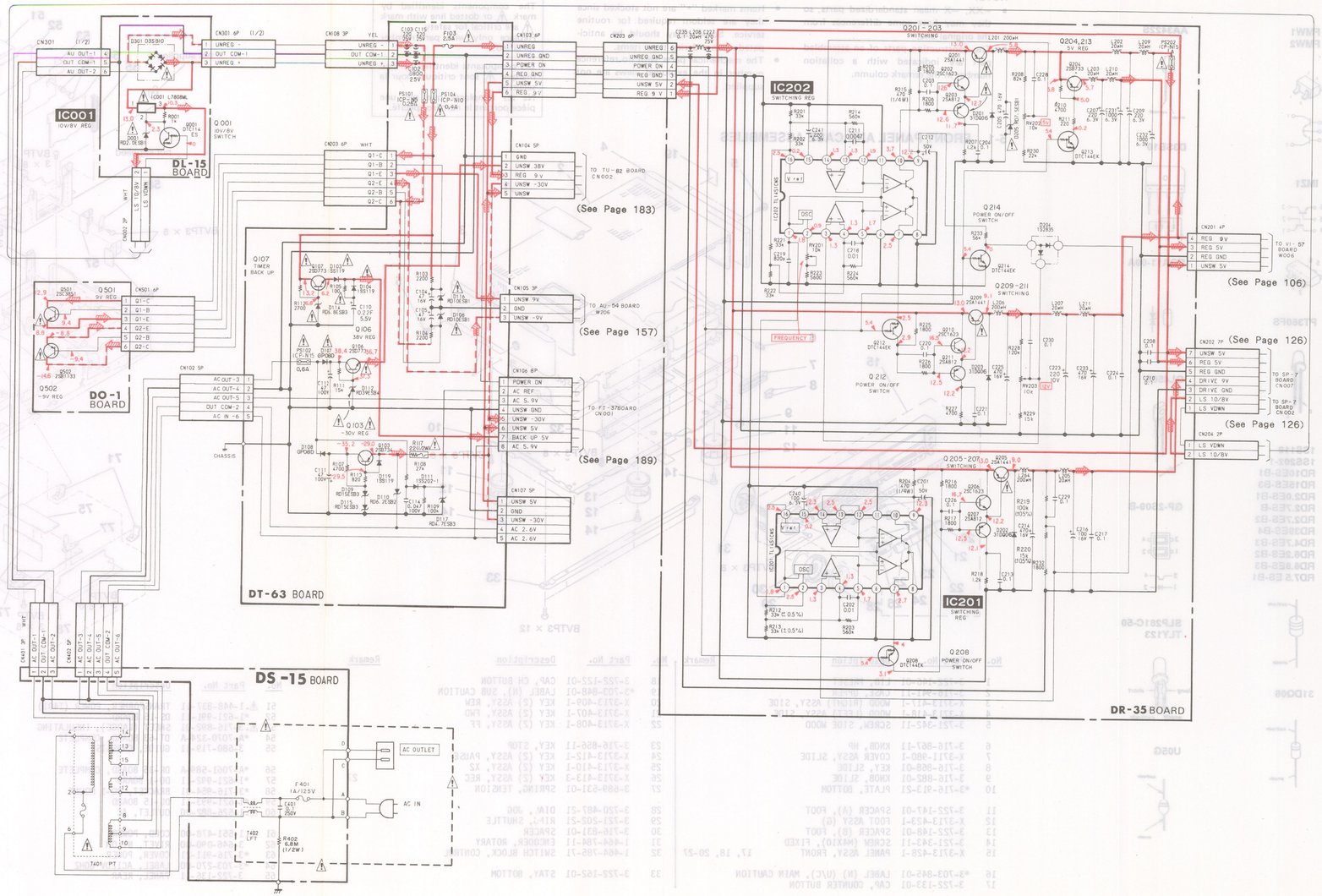

- **For schematic diagrams.**
- Unless otherwise noted, DL-15 and DT-63 boards are 1/4W.

4-3. SEMICONDUCTORS

BA3707
NJM4560S

BA401
M51955BL

BA7036LS

BX1387

CX20030
CX20031
CX20032
CX20035
CX23011
CX23054
CXA1234AR
CXD1066Q
MB64H428PF

CXP5016-253G
CXP5048H-111Q
CXP5048H-113Q
MB674101PF
μPD75104G-547-1B
μPD75106G-529-1B

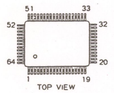

LB164ON

M5201L

MC14538BF

TA7374P

TL431CLPB

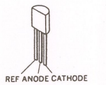

μPD7519HG-060-36

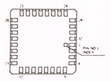

2SA1175
2SC2785
2SC2785-E

2SA1441

2SB1133-R
2SC3851
2SD1266
2SD1406

2SB733
2SB733-4
2SB734
2SD773

2SB740

FMS1FE

FMW1
FMW2

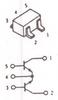

IMZ1

PT360FS

1SS119
1SS202-1
RD10ES-B1
RD15ES-B3
RD2.0ES-B1
RD2.7ES-B
RD2.7ES-B2
RD39ES-B4
RD4.7ES-B3
RD6.2ES-B2
RD6.8ES-B3
RD7.5 ES-B1

31DQ06

AA3422S

D3SB10

EQA11-09A

GL450S

GP-2S09-B

SLP281C-50
TLY123

U05G

SECTION 5
EXPLODED VIEWS

NOTE:

- –XX, –X mean standardized parts, so they may have some differences from the original one.
- The construction parts of an assembled part are indicated with a collation number in the remark column.
- Items marked "*" are not stocked since they are seldom required for routine service. Some delay should be anticipated when ordering these items.
- The mechanical parts with no reference number in the exploded views are not supplied.

The components identified by mark ⚠ or dotted line with mark ⚠ are critical for safety.
Replace only with part number specified.

Les composants identifiés par une marque ⚠ sont critiques pour la sécurité.
Ne les remplacer que par une pièce portant le numéro spécifié.

5-1. FRONT PANEL AND CASE ASSEMBLIES

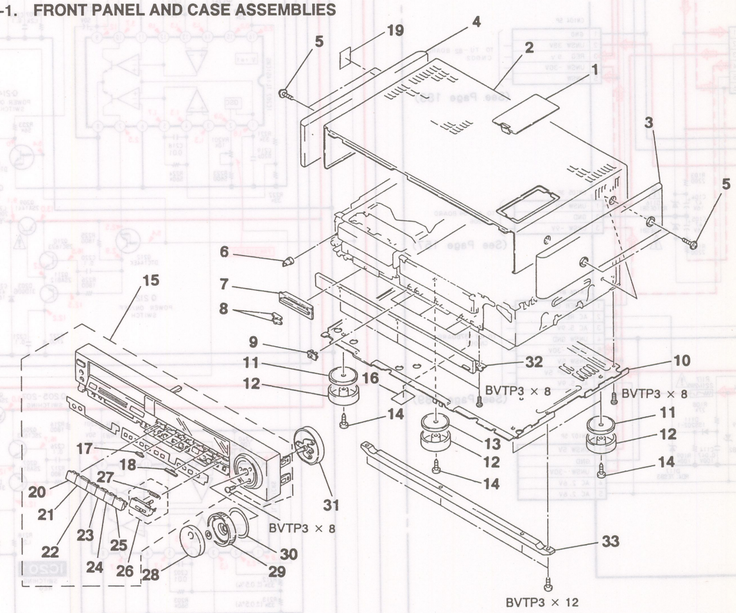

No.	Part No.	Description	Remark
1	3-722-146-01	LID, PRESET	
2	3-716-941-11	CASE, UPPER	
3	X-3713-417-1	WOOD (RIGHT) ASSY, SIDE	
4	X-3713-418-1	WOOD (LEFT) ASSY, SIDE	
5	3-721-342-11	SCREW, SIDE WOOD	
6	3-716-867-11	KNOB, HP	
7	X-3711-980-1	COVER ASSY, SLIDE	
8	3-716-868-01	KEY, SLIDE	
9	3-716-882-01	KNOB, SLIDE	
10	*3-716-913-21	PLATE, BOTTOM	
11	3-722-147-01	SPACER (A), FOOT	
12	X-3713-423-1	FOOT ASSY (G)	
13	3-722-148-01	SPACER (B), FOOT	
14	3-721-343-11	SCREW (M4X10), FIXED	
15	X-3713-428-1	PANEL ASSY, FRONT	17, 18, 20-27
16	*3-703-845-01	LABEL (N) (U/C), MAIN CAUTION	
17	3-722-133-01	CAP, COUNTER BUTTON	
18	3-722-122-01	CAP, CH BUTTON	
19	*3-703-848-01	LABEL (N), SUB CAUTION	
20	X-3713-409-1	KEY (2) ASSY, REW	
21	X-3713-407-1	KEY (2) ASSY, FWD	
22	X-3713-408-1	KEY (2) ASSY, FF	
23	3-716-856-11	KEY, STOP	
24	X-3713-412-1	KEY (2) ASSY, PAUSE	
25	X-3713-410-1	KEY (2) ASSY, X2	
26	X-3713-413-3	KEY (2) ASSY, REC	27
27	3-689-531-01	SPRING, TENSION	
28	3-720-487-21	DIAL, JOG	
29	3-721-202-21	RING, SHUTTLE	
30	3-716-831-01	SPACER	
31	1-464-784-11	ENCODER, ROTARY	
32	1-464-785-71	SWITCH BLOCK, CONTROL	
33	3-722-162-01	STAY, BOTTOM	

5-2. POWER BLOCK AND REAR PANEL ASSEMBLIES

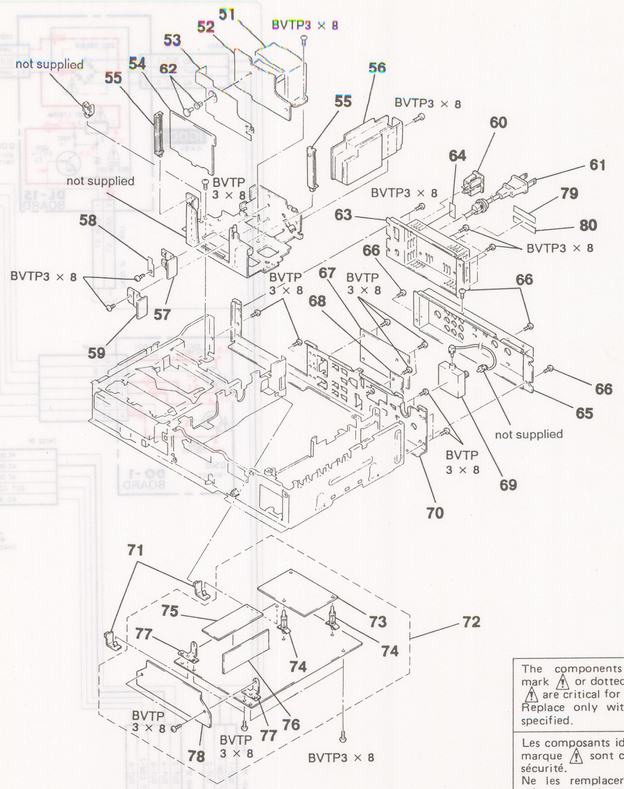

The components identified by mark ⚠ or dotted line with mark ⚠ are critical for safety.
Replace only with part number specified.

Les composants identifiés par une marque ⚠ sont critiques pour la sécurité.
Ne les remplacer que par une pièce portant le numéro spécifié.

No.	Part No.	Description	Remark
51	⚠1-448-837-11	TRANSFORMER, POWER (T401)	
52	*1-621-991-11	DS-15 BOARD	
53	⚠3-716-892-01	SHEET (LARGE), INSULATING	
54	*A-7070-324-A	DT-63 BOARD, COMPLETE	
55	3-680-719-11	GUIDE, CHASSIS	
56	*A-7061-589-A	DR-35 BOARD, COMPLETE	
57	*1-621-992-11	DO-1 BOARD	
58	*3-716-954-01	BRACKET, DO-1 MOUNT	
59	*1-621-993-11	DL-15 BOARD	
60	⚠1-526-882-00	OUTLET, AC	
61	⚠1-551-478-00	CORD, POWER	
62	3-646-090-00	RIVET, NYLON	
63	*3-716-911-21	COVER, POWER	
64	*3-703-270-00	LABEL, AC120V 60HZ	
65	3-722-136-11	PANEL, REAR	
66	3-710-901-11	SCREW (3X8), TAPPING	
67	*A-7061-497-B	IO-17 BOARD, COMPLETE	
68	*1-629-042-11	IO-16 BOARD	
69	⚠1-466-156-11	MODULATOR, RF (RFU-1011)	
70	*3-722-137-01	CHASSIS, REAR	
71	*3-701-832-00	HINGE, CIRCUIT BOARD	
72	*A-7061-371-B	VI-57 BOARD, COMPLETE	73-7
73	*A-7061-374-A	YC-56 BOARD, COMPLETE	
74	*3-703-353-07	SUPPORT, PC BOARD	
75	*A-7061-373-A	CH-44 BOARD, COMPLETE	
76	*A-7061-494-A	NC-8 BOARD, COMPLETE	
77	*3-722-118-01	RETAINER, JG PC BOARD	
78	*A-7061-372-B	JG-11 BOARD, COMPLETE	
79	*3-704-386-01	LABEL, TELESONIC	
80	*3-704-367-01	LABEL (US)	

5-3. BOARD ASSEMBLY

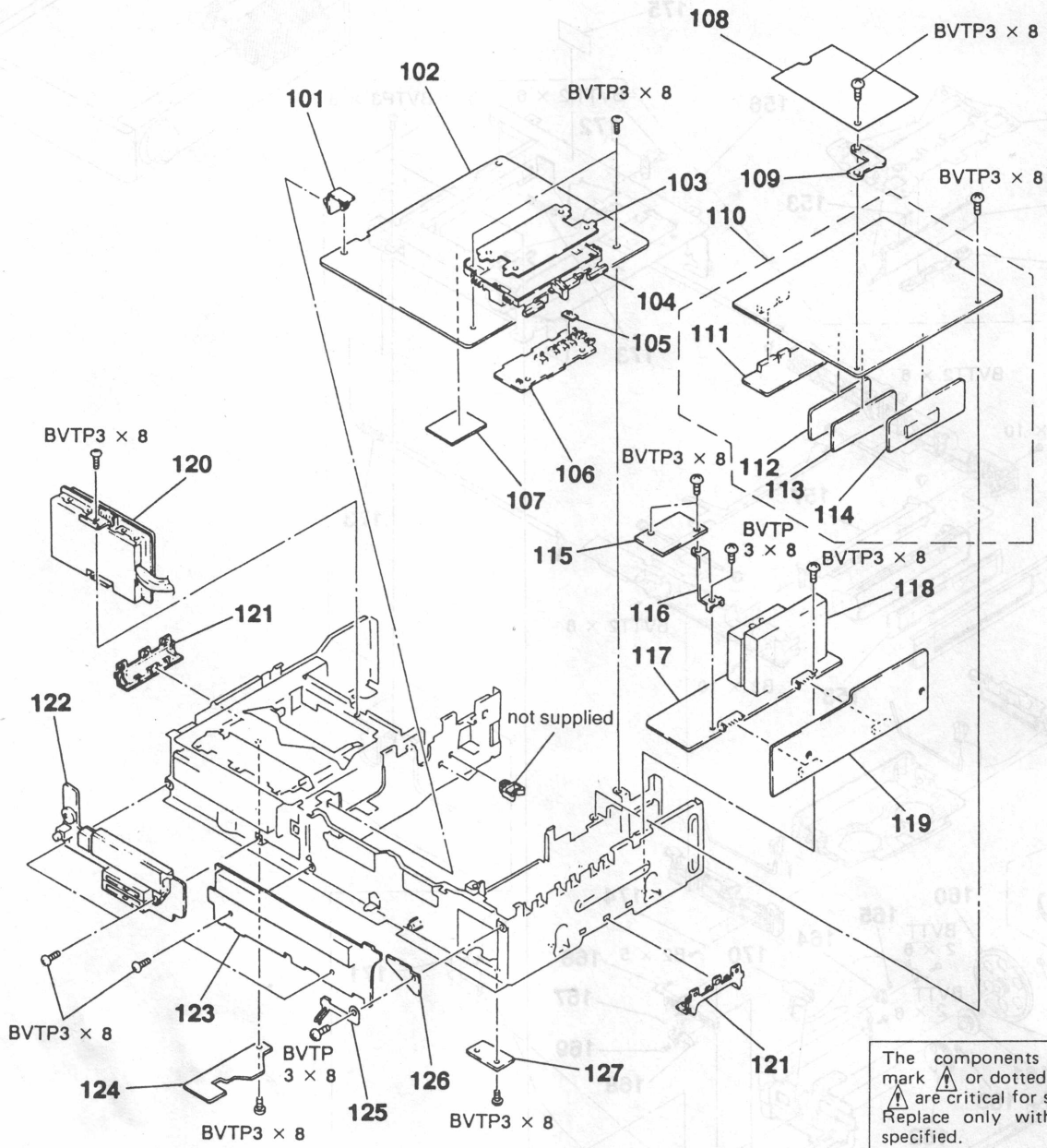

The components identified by mark ⚠ or dotted line with mark ⚠ are critical for safety.
Replace only with part number specified.

Les composants identifiés par une marque ⚠ sont critiques pour la sécurité.
Ne les remplacer que par une pièce portant le numéro spécifié.

No.	Part No.	Description	Remark
101	*3-701-832-00	HINGE, CIRCUIT BOARD	
102	*A-7061-727-A	SP-7 BOARD, COMPLETE	107
103	3-716-841-61	SHEET, PRESET	
104	X-3711-989-1	PRESET (MAIN)	
105	3-713-694-01	KNOB (P), SLIDE	
106	*A-7060-465-A	PR-12 BOARD, COMPLETE	
107	*A-7061-073-A	DM-18 BOARD, COMPLETE	
108	*X-3711-990-1	PLATE (AU) ASSY, SHIELD	
109	*3-716-962-01	BRACKET (AU)	
110	*A-7061-728-A	AU-54 BOARD, COMPLETE	111-114
111	A-7068-113-A	AD-12 BOARD, COMPLETE	
112	*A-7060-913-A	NR-6 BOARD, COMPLETE	
113	*A-7068-148-A	MK-2 BOARD, COMPLETE	
114	*A-7068-021-A	AF-20 BOARD, COMPLETE	
115	*1-623-612-11	TM-94 BOARD	
116	*3-716-961-01	BRACKET (TU)	
117	*A-7060-462-A	TU-82 BOARD, COMPLETE	118
118	⚠1-463-771-11	TUNER, ET (BTP-201A) (TU001)	
119	*A-7060-463-A	TS-49 BOARD, COMPLETE	
120	*A-7061-366-A	RP-68 BOARD, COMPLETE	
121	3-716-907-01	PROTECTOR, FRAME	
122	*A-7051-370-A	PW-62 BOARD, COMPLETE	
123	*A-7061-674-A	FT-37 BOARD, COMPLETE	
124	*A-7061-499-A	MJ-11 BOARD, COMPLETE	
125	3-722-158-01	PLATE, GROUND, FR	
126	*1-629-041-11	FR-39 BOARD	
127	*1-621-987-11	CB-8 BOARD	

5-4. LS CASSETTE COMPARTMENT ASSEMBLY

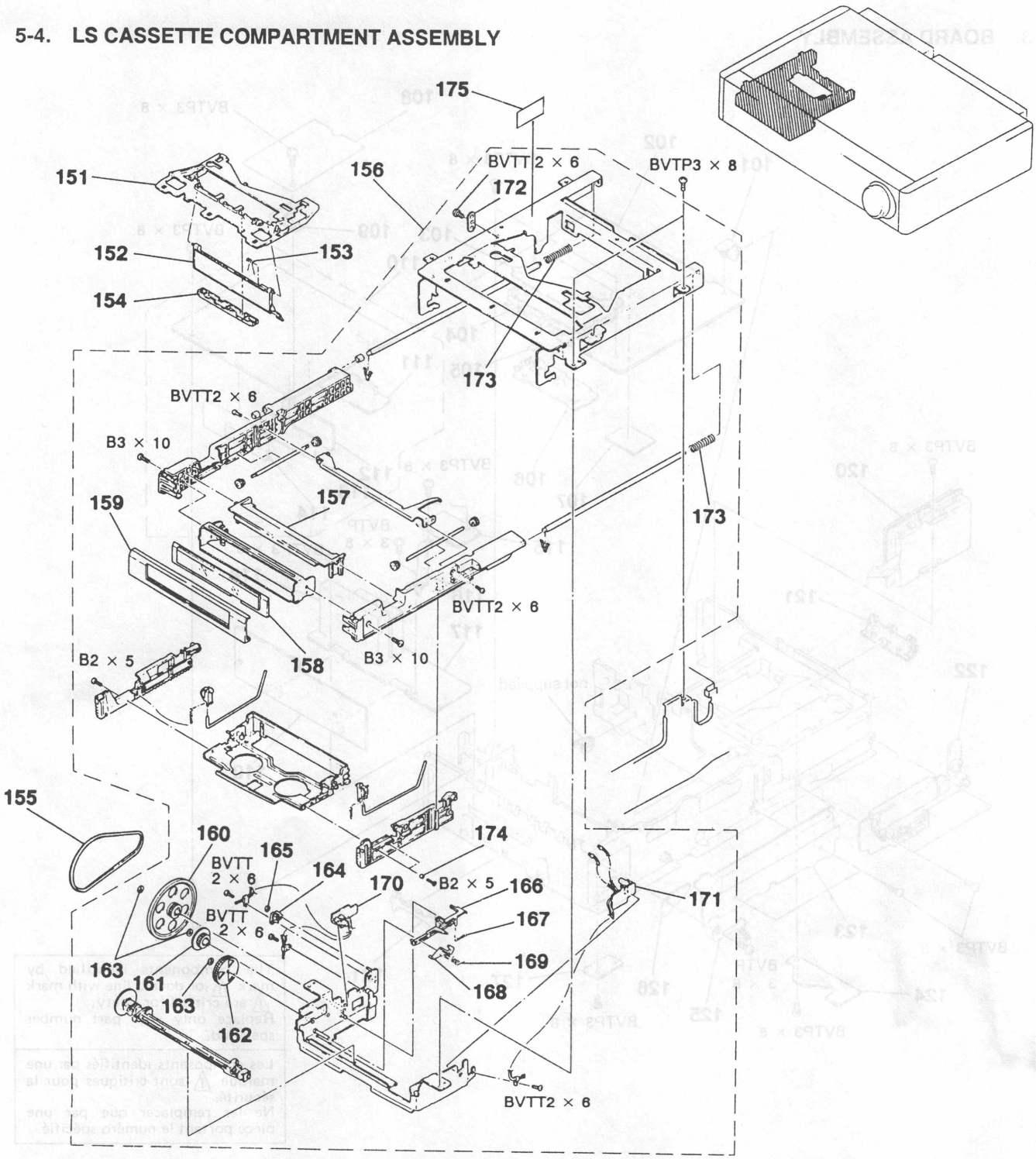

No.	Part No.	Description	Remark
151	3-716-908-01	CLAMP, LAMP	
152	X-3711-965-1	MIRROR ASSY	
153	3-713-686-01	SPRING	
154	3-716-884-01	HOLDER, LAMP	
155	3-713-670-01	BELT, LS	
156	A-7091-022-A	CASSETTE COMPARTMENT ASSY (2)	157-174
157	3-716-885-01	PLATE, SLOPE	
158	3-722-117-01	GLASS (2), WINDOW	
159	3-722-116-01	PLATE, ORNAMENTAL, WINDOW	
160	3-716-849-01	PULLEY, MIDWAY	
161	3-716-819-01	GEAR, DECELERATION	
162	X-3711-968-1	GEAR ASSY, LIMITER	
163	3-669-596-00	WASHER (2.3), STOPPER	

No.	Part No.	Description	Remark
164	3-716-821-01	ARM, SW	
165	3-669-465-00	WASHER (1.5), STOPPER	
166	3-716-937-01	SLIDER, LOCK	
167	3-716-825-01	SPRING, TENSION	
168	3-716-850-01	HOLDER, LOCK	
169	3-713-687-01	SPRING	
170	*1-621-998-11	TE-6 BOARD	
171	*1-621-997-11	TE-5 BOARD	
172	*3-716-944-01	BRACKET, STOPPER, SHAFT	
173	3-716-949-01	SPRING, COMPRESSION	
174	*3-657-841-01	SPACER 2X2	
175	*3-703-044-26	LABEL, CAUTION	

5-5. CHASSIS ASSEMBLY 1

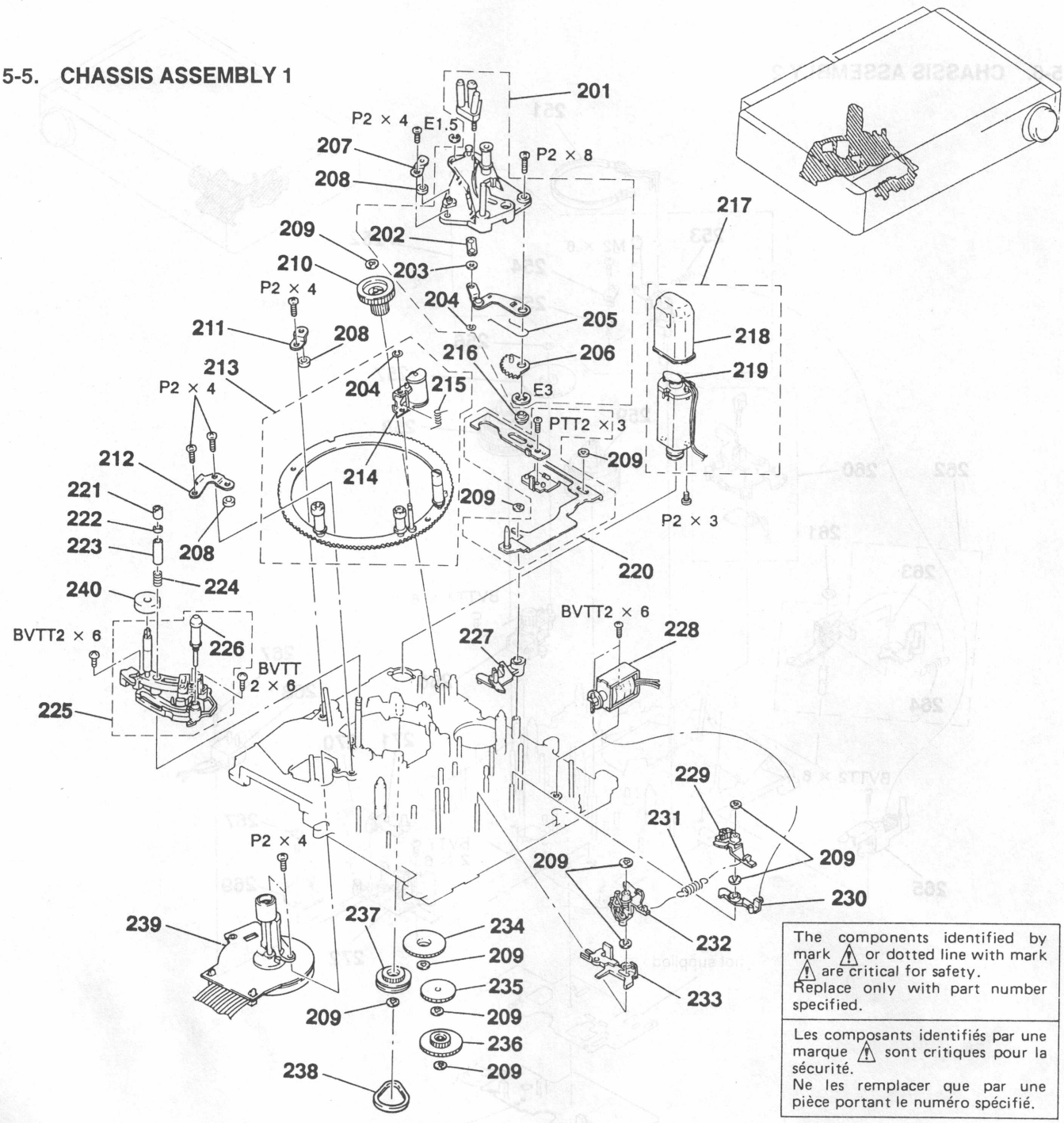

The components identified by mark ⚠ or dotted line with mark ⚠ are critical for safety.
Replace only with part number specified.

Les composants identifiés par une marque ⚠ sont critiques pour la sécurité.
Ne les remplacer que par une pièce portant le numéro spécifié.

No.	Part No.	Description	Remark
201	A-7040-001-A	GUIDE BLOCK ASSY, SLANT	202-206
202	3-686-663-01	WASHER, STOPPER, 2 GANG	
203	3-701-436-21	WASHER, POLYEHTHYLENE	
204	3-315-384-31	WASHER, STOPPER	
205	3-686-701-01	SPRING	
206	3-699-509-01	GEAR, SECTOR	
207	*3-686-503-01	RETAINER, ROLLER	
208	3-697-538-01	ROLLER, RING	
209	3-669-465-00	WASHER (1.5), STOPPER	
210	3-697-518-01	GEAR, NO.10	
211	*3-686-911-01	PLATE, TOP, ROLLER	
212	*3-686-675-01	STOPPER, RING	
213	A-7040-123-A	RING ASSY, THREADING	204, 214, 215
214	X-3686-648-1	ARM ASSY, PINCH ROLLER	
215	3-686-566-01	SPRING, TORSION	
216	3-686-537-01	RETAINER, LOCK SLODER	
217	A-7040-065-A	MOTOR ASSY, L (THREADING)(M904)	218, 219
218	*3-686-757-01	CAP, SHIELD, L MOTOR	
219	1-161-057-00	CAP, CERAMIC 0.033MF X	
220	A-7040-167-A	SLIDER ASSY, LOCK	

No.	Part No.	Description	Remark
221	3-686-724-01	NUT, GUIDE	
222	*3-686-894-01	FLANGE, #3 #4 GUIDE	
223	3-686-912-01	GUIDE, #3 #4	
224	3-699-609-01	SPRING, COMPRESSION	
225	A-7040-169-D	GUIDE (P) ASSY, ENTRANCE	226
226	X-3713-405-2	GUIDE ASSY, #2	
227	*3-686-636-04	ARM, T.S RELEASE	
228	⚠1-454-377-31	SOLENOID, PLUNGER (BRAKE) (PM901)	
229	X-3686-574-1	BRAKE ASSY, MAIN, TAKE-UP	
230	*3-686-635-01	ARM, P	
231	3-713-560-01	SPRING, TENSION	
232	X-3713-429-1	BRAKE ASSY, MAIN, S	
233	*3-686-629-01	SLIDER, SELECTION, UPPER & LOWER	
234	3-686-508-01	GEAR, NO.2	
235	3-686-545-01	GEAR, NO.3	
236	3-686-544-01	GEAR, NO.4	
237	X-3686-514-1	GEAR ASSY, NO.1	
238	3-686-546-01	BELT, L- MOTOR	
239	8-835-247-01	MOTOR, DC BHF-2804D (CAPSTAN) (M906)	
240	3-722-153-01	FLYWHEEL	

5-6. CHASSIS ASSEMBLY 2

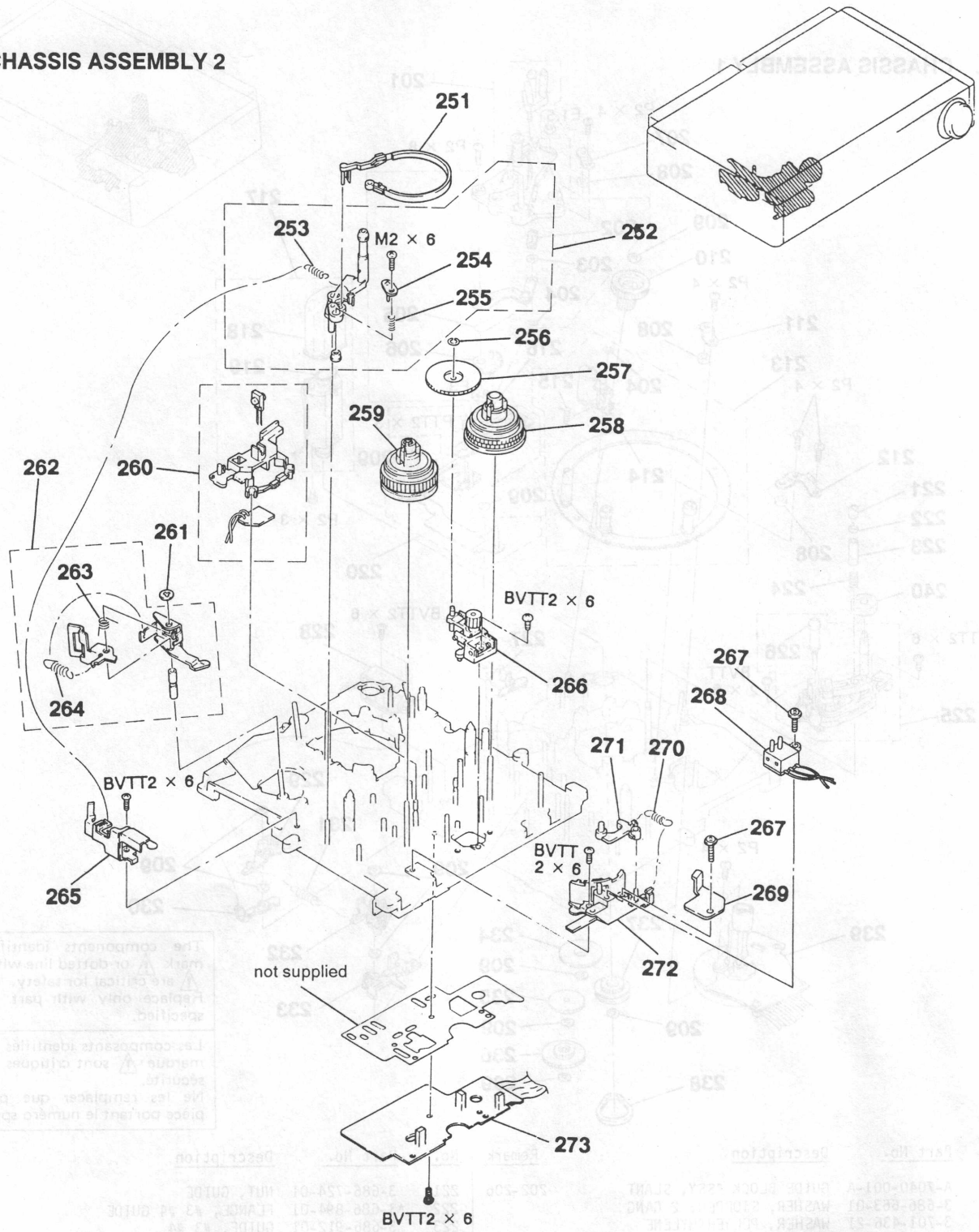

No.	Part No.	Description	Remark
251	X-3686-531-1	BAND ASSY, TENSION REGULATOR	
252	A-7040-071-A	ARM ASSY, TENSION REGULATOR	253-255
253	3-699-519-01	SPRING, TENSION	
254	*X-3686-523-1	PLATE ASSY, TENSION REGULATOR	
255	3-669-666-00	SPRING, COMPRESSION	
256	3-315-384-31	WASHER, STOPPER	
257	X-3686-763-1	GEAR (B) ASSY, DRIVING	
258	X-3711-998-1	TABLE ASSY, REEL, TAKE-UP	
259	X-3713-427-1	TABLE ASSY, REEL, S	
260	*A-7070-024-A	LD-1 BOARD, COMPLETE	
261	3-669-465-00	WASHER (1.5), STOPPER	
262	A-7040-008-A	ARM ASSY, PINCH PRESS	263, 264
263	3-686-568-01	SPRING, TORSION	
264	3-686-885-01	SPRING, TENSION	
265	*X-3686-525-1	HOOK ASSY, SPRING	
266	X-3711-963-1	DRIVING COMPLETE ASSY	
267	3-669-480-11	+ PTPWH 2	
268	1-554-942-11	SWITCH, PUSH (RECOG L) (S902)	
269	*3-686-991-01	STOPPER, REEL TABLE	
270	3-696-082-01	SPRING, TENSION	
271	*3-686-637-01	BRAKE (S), SOFT	
272	*3-686-760-01	GUIDE, BAND	
273	*A-7061-543-A	RS-17 BOARD, COMPLETE	

5-7. CHASSIS ASSEMBLY 3

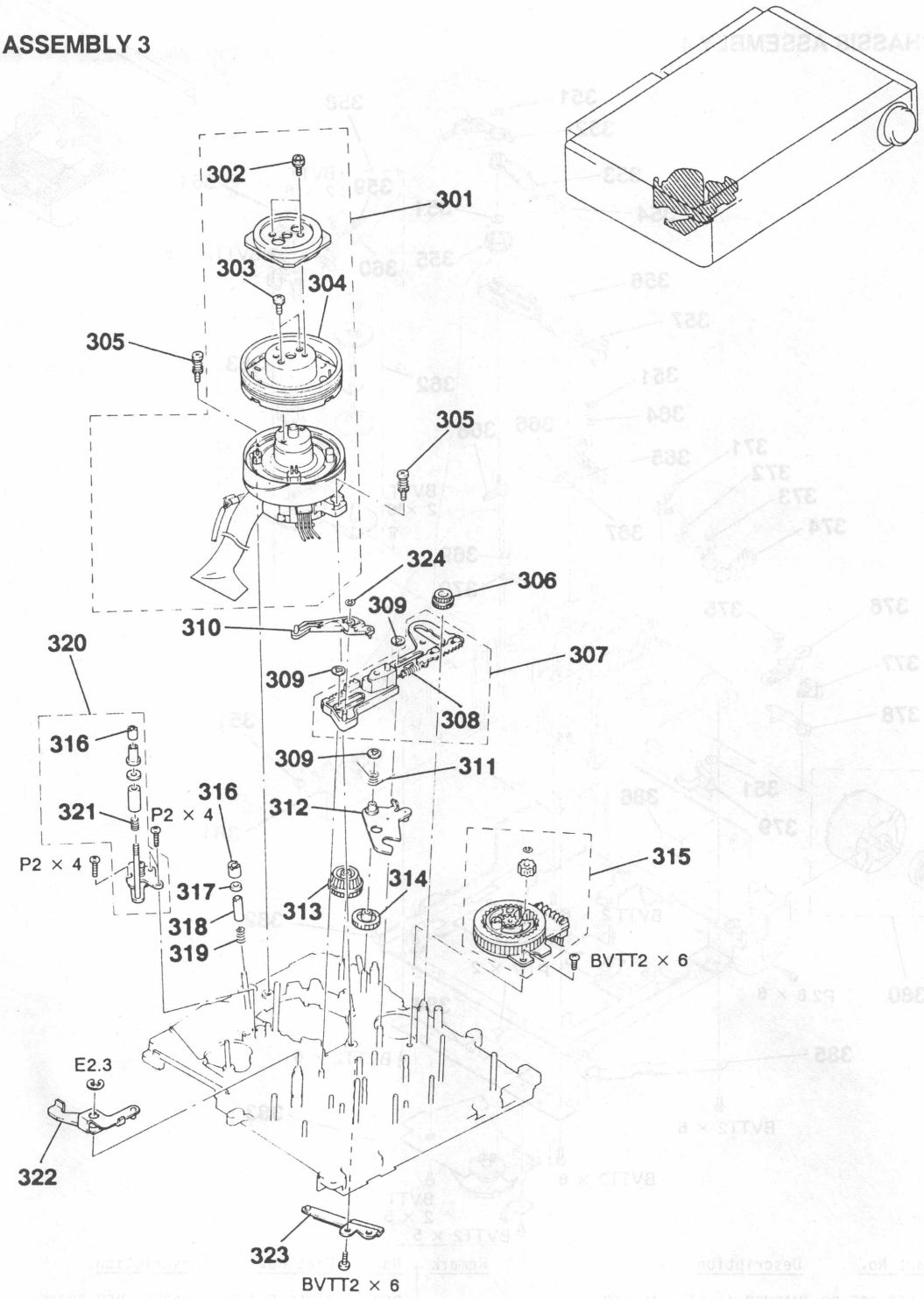

No.	Part No.	Description	Remark
301	A-7048-201-A	DRUM ASSY (DGH-35A-R)	302-304
302	3-686-422-01	WASHER (2X2.7), BOLT, HOLE	
303	3-686-493-01	SCREW +P 2X5 TYPE 1	
304	A-7049-188-A	DRUM ASSY, ROTARY (UPPER) (DGR-35-R)	
305	X-3686-569-1	SCREW ASSY, FITTING	
306	3-686-702-01	GEAR, DRIVING, GUIDE, SLANT	
307	*A-7040-010-A	SLIDER ASSY, L	308
308	3-686-886-01	SPRING, TENSION	
309	3-669-465-00	WASHER (1.5), STOPPER	
310	*X-3686-518-3	ARM ASSY	
311	3-686-540-01	SPRING, TORSION	
312	X-3686-579-1	CHANGE ASSY, DRIVE	

No.	Part No.	Description	Remark
313	3-686-539-01	GEAR, NO.9	
314	3-686-535-01	GEAR, NO.8	
315	X-3712-403-1	L-SW ASSY	
316	3-686-724-01	NUT, GUIDE	
317	*3-686-894-01	FLANGE, #3 #4 GUIDE	
318	3-686-912-01	GUIDE, #3 #4	
319	3-699-609-01	SPRING, COMPRESSION	
320	A-7040-058-A	GUIDE BLOCK COMPLETE ASSY, #5	316, 321
321	3-699-514-01	SPRING, COMPRESSION	
322	*X-3686-509-1	LEVER ASSY, PINCH PRESS	
323	1-535-535-11	TERMINAL, SHAFT GROUND	
324	3-315-384-31	WASHER, STOPPER	

5-8. CHASSIS ASSEMBLY 4

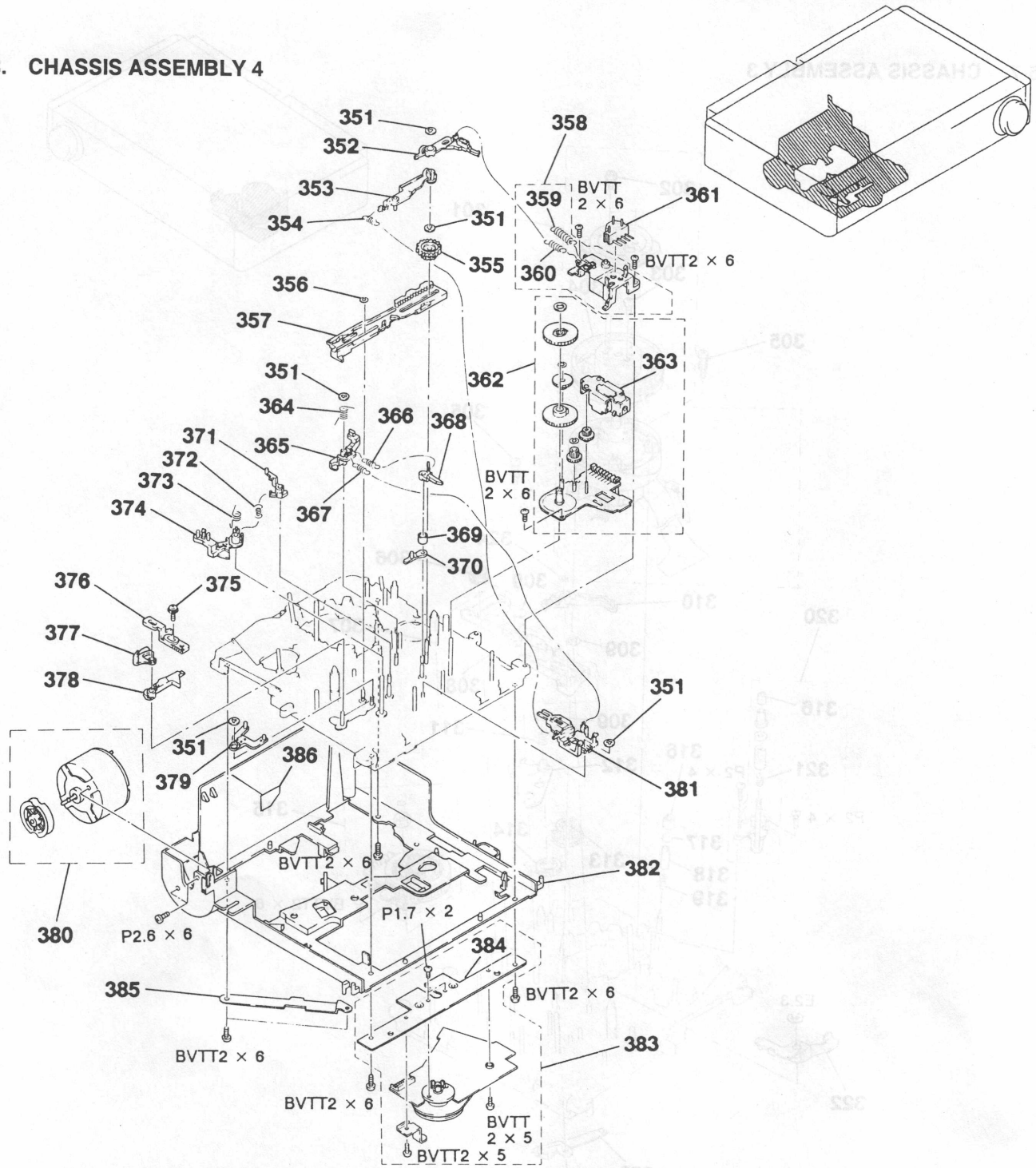

No.	Part No.	Description	Remark
351	3-669-465-00	WASHER (1.5), STOPPER	
352	X-3711-987-2	BRAKE ASSY, T.S	
353	*X-3686-528-4	ARM ASSY, B RELEASE	
354	3-686-903-01	SPRING, TENSION	
355	3-686-909-01	GEAR, MODE OUTPUT	
356	3-315-384-31	WASHER, STOPPER	
357	3-716-935-01	SLIDER, M	
358	A-7040-168-A	COVER ASSY, C MOTOR	359, 360
359	3-722-110-01	SPRING, TENSION	
360	3-714-035-01	SPRING, TENSION	
361	1-571-680-21	SWITCH, PUSH (3 KEY) (RECOG R) (S901)	
362	A-7090-029-A	M-SW ASSY	363
363	8-835-138-01	MOTOR, DC (DNR-5301B) (CONTROL) (M903)	
364	3-686-579-01	SPRING	
365	*3-686-634-01	ARM, RL	
366	3-686-906-01	SPRING, TENSION	
367	3-686-904-01	SPRING, TENSION	
368	X-3711-993-1	BRAKE ASSY, REW	

No.	Part No.	Description	Remark
369	3-716-933-01	SPACER, REW BRAKE	
370	*3-686-580-01	ARM, SET UP	
371	3-686-996-01	BRAKE (S), HARD	
372	3-686-905-02	SPRING, TENSION	
373	3-686-603-04	SPRING	
374	*3-686-644-01	ARM, BAND	
375	3-686-528-01	SCREW (2X6), +	
376	*3-686-642-01	PLATE, ADJUSTMENT, BAND	
377	3-716-934-01	DISK, EJECT	
378	*3-686-643-01	ARM, MODE	
379	*X-3686-530-1	ARM (A) ASSY, SELECTION	
380	A-7090-661-A	MOTOR BLOCK ASSY, LS(LINEAR SKATE)(M905)	
381	*3-686-656-01	SLIDER, B RELEASE	
382	*3-716-915-01	FRAME, MD	
383	8-835-282-03	MOTOR, DC U-11A (REEL) (M901)	384
384	*3-716-922-01	BRACKET, REEL MOTOR	
385	*3-716-894-01	RETAINER, ROTOR	
386	*3-722-175-01	SPACER, MD	

SECTION 6
ELECTRICAL PARTS LIST

TU-82

NOTE:

The components identified by mark ⚠ or dotted line with mark ⚠ are critical for safety.
Replace only with part number specified.

Les composants identifiés par une marque ⚠ sont critiques pour la sécurité.
Ne les remplacer que par une pièce portant le numéro spécifé.

When indicating parts by reference number, please include the board name.

- Due to standardization, replacements in the parts list may be different from the parts specified in the diagrams or the components used on the set.
- −XX, −X mean standardized parts, so they may have some difference from the original one.
- RESISTORS
  All resistors are in ohms
  METAL : Metal-film resistor
  METAL OXIDE : Metal Oxide-film resistor
  F : nonflammable
- Items marked "*" are not stocked since they are seldom required for routine service. Some delay should be anticipated when ordering these items.
- SEMICONDUCTORS
  In each case, U : μ, for example:
  UA...: μA..., UPA...: μPA...,
  UPB...: μPB..., UPC...: μPC...,
  UPD...: μPD...
- CAPACITORS
  MF : μF, PF : μμF
- COILS
  MMH : mH, UH : μH

No.	Part No.	Description				Remark
	*A-7060-462-A	TU-82 BOARD, COMPLETE **********				
		CAPACITOR				
C001	1-102-114-00	CERAMIC	470PF	10%	50V	
C002	1-102-966-00	CERAMIC	43PF	5%	50V	
C003	1-102-953-00	CERAMIC	18PF	5%	50V	
C004	1-124-446-11	ELECT	47MF	20%	10V	
C005	1-124-963-11	ELECT	33MF	20%	16V	
C006	1-124-902-00	ELECT	0.47MF	20%	50V	
C007	1-130-477-00	MYLAR	0.0033MF	5%	50V	
C008	1-124-902-00	ELECT	0.47MF	20%	50V	
C009	1-102-112-00	CERAMIC	330PF	10%	50V	
C010	1-102-112-00	CERAMIC	330PF	10%	50V	
C011	1-102-112-00	CERAMIC	330PF	10%	50V	
C012	1-126-233-11	ELECT	22MF	20%	50V	
C013	1-124-471-00	ELECT	1000MF	20%	6.3V	
C014	1-101-004-00	CERAMIC	0.01MF		50V	
C015	1-124-443-00	ELECT	100MF	20%	10V	
C016	1-101-004-00	CERAMIC	0.01MF		50V	
C017	1-123-875-11	ELECT	10MF	20%	50V	
C018	1-123-875-11	ELECT	10MF	20%	50V	
C022	1-123-875-11	ELECT	10MF	20%	50V	
C023	1-130-776-00	FILM	0.47MF	10%	63V	
C024	1-102-121-00	CERAMIC	0.0022MF	10%	50V	
C025	1-102-121-00	CERAMIC	0.0022MF	10%	50V	
C027	1-123-875-11	ELECT	10MF	20%	50V	
C028	1-123-875-11	ELECT	10MF	20%	50V	
C030	1-124-963-11	ELECT	33MF	20%	16V	
C035	1-102-121-00	CERAMIC	0.0022MF	10%	50V	
		CONNECTOR				
CN001	*1-560-890-00	PIN, CONNECTOR 2P				
CN002	*1-560-893-00	PIN, CONNECTOR 5P				
CN003	*1-560-892-00	PIN, CONNECTOR 4P				
		DIODE				
D001	8-719-911-19	DIODE 1SS119				
		IC				
IC001⚠	8-759-157-40	IC UPC574J				
		COIL				
L001	1-408-413-00	INDUCTOR	22UH			
L002	1-410-093-11	INDUCTOR	33MMH			
L003	1-408-409-00	INDUCTOR	10UH			
L004	1-408-409-00	INDUCTOR	10UH			
L005	1-408-409-00	INDUCTOR	10UH			
		TRANSISTOR				
Q001	8-729-178-54	TRANSISTOR 2SC2785-F				
Q002	8-729-117-54	TRANSISTOR 2SA1175-F				
Q003	8-729-117-54	TRANSISTOR 2SA1175-F				
Q004	8-729-178-54	TRANSISTOR 2SC2785-F				
Q006	8-729-178-54	TRANSISTOR 2SC2785-F				
Q007	8-729-178-54	TRANSISTOR 2SC2785-F				
Q008	8-729-900-80	TRANSISTOR DTC114ES				
		RESISTOR				
R001	1-249-413-11	CARBON	470	5%	1/4W	
R002	1-249-417-11	CARBON	1K	5%	1/4W	
R003	1-249-409-11	CARBON	220	5%	1/4W	
R004	1-249-405-11	CARBON	100	5%	1/4W	
R005	1-249-421-11	CARBON	2.2K	5%	1/4W	
R007	1-249-423-11	CARBON	3.3K	5%	1/4W	
R008	1-247-891-00	CARBON	330K	5%	1/4W	
R009	1-247-903-00	CARBON	1M	5%	1/4W	
R010	1-249-428-11	CARBON	8.2K	5%	1/4W	
R011	1-249-421-11	CARBON	2.2K	5%	1/4W	
R012⚠	1-247-825-31	CARBON	560	5%	1/4W	
R013	1-249-426-11	CARBON	5.6K	5%	1/4W	
R020	1-247-883-00	CARBON	150K	5%	1/4W	
R021	1-247-883-00	CARBON	150K	5%	1/4W	
R022	1-249-423-11	CARBON	3.3K	5%	1/4W	
R023	1-249-423-11	CARBON	3.3K	5%	1/4W	
R024	1-249-435-11	CARBON	33K	5%	1/4W	
R025	1-249-417-11	CARBON	1K	5%	1/4W	
R026	1-249-417-11	CARBON	1K	5%	1/4W	
R027	1-249-417-11	CARBON	1K	5%	1/4W	
R028	1-249-418-11	CARBON	1.2K	5%	1/4W	
R029	1-249-413-11	CARBON	470	5%	1/4W	
R030	1-249-418-11	CARBON	1.2K	5%	1/4W	
R031	1-249-413-11	CARBON	470	5%	1/4W	
R032⚠	1-212-946-00	FUSIBLE	3.3	5%	1/2W	F
R033	1-249-429-11	CARBON	10K	5%	1/4W	
R034	1-249-429-11	CARBON	10K	5%	1/4W	
R035	1-249-428-11	CARBON	8.2K	5%	1/4W	
R036	1-249-393-11	CARBON	10	5%	1/4W	
R037	1-249-417-11	CARBON	1K	5%	1/4W	
R038	1-249-421-11	CARBON	2.2K	5%	1/4W	
		VARIABLE RESISTOR				
RV002	1-228-994-00	RES, ADJ, CARBON 10K				
		TUNER				
TU001⚠	1-463-771-11	TUNER, ET (BTP-201A)				
		IF BLOCK				
VIF001⚠	1-464-817-31	IF BLOCK (IFT-450S)				
		CONNECTOR				
W004	1-566-286-11	CONNECTOR, BOARD TO BOARD 8P				
W005	1-566-287-11	CONNECTOR, BOARD TO BOARD 10P				

TS-49

No.	Part No.	Description			Remark
	*A-7060-463-A	TS-49 BOARD, COMPLETE **********			
		CAPACITOR			
C101	1-124-446-11	ELECT	47MF	20%	10V
C102	1-101-004-00	CERAMIC	0.01MF		50V
C105	1-101-004-00	CERAMIC	0.01MF		50V
C701	1-123-875-11	ELECT	10MF	20%	50V
C702	1-123-382-00	ELECT	3.3MF	20%	50V
C703	1-130-495-00	MYLAR	0.1MF	5%	50V
C704	1-124-499-11	ELECT	1MF	20%	50V
C705	1-131-368-00	TANTALUM	3.3MF	10%	16V
C706	1-131-365-00	TANTALUM	10MF	10%	16V
C707	1-124-925-11	ELECT	2.2MF	20%	50V
C708	1-126-233-11	ELECT	22MF	20%	25V
C709	1-126-101-11	ELECT	100MF	20%	16V
C710	1-130-475-00	MYLAR	0.0022MF	5%	50V
C711	1-126-320-11	ELECT	10MF	20%	16V
C712	1-130-487-00	MYLAR	0.022MF	5%	50V
C713	1-123-875-11	ELECT	10MF	20%	50V
C751	1-123-875-11	ELECT	10MF	20%	50V
C752	1-123-382-00	ELECT	3.3MF	20%	50V
C753	1-130-495-00	MYLAR	0.1MF	5%	50V
C754	1-124-499-11	ELECT	1MF	20%	50V
C755	1-131-368-00	TANTALUM	3.3MF	10%	16V
C756	1-131-365-00	TANTALUM	10MF	10%	16V
C757	1-124-925-11	ELECT	2.2MF	20%	50V
C758	1-126-233-11	ELECT	22MF	20%	25V
C759	1-126-101-11	ELECT	100MF	20%	16V
C760	1-130-475-00	MYLAR	0.0022MF	5%	50V
C761	1-126-320-11	ELECT	10MF	20%	16V
C762	1-130-487-00	MYLAR	0.022MF	5%	50V
C763	1-130-485-00	MYLAR	0.015MF	5%	50V
C801	1-123-875-11	ELECT	10MF	20%	50V
C802	1-130-483-00	MYLAR	0.01MF	5%	50V
C803	1-130-487-00	MYLAR	0.022MF	5%	50V
C808	1-123-875-11	ELECT	10MF	20%	50V
C809	1-130-489-00	MYLAR	0.033MF	5%	50V
C810	1-123-875-11	ELECT	10MF	20%	50V
C811	1-130-021-00	FILM	0.0018MF	5%	50V
C812	1-124-438-00	ELECT	1MF	20%	50V
C813	1-126-157-11	ELECT	10MF	20%	16V
C815	1-123-875-11	ELECT	10MF	20%	50V
C816	1-124-963-11	ELECT	33MF	20%	16V
C817	1-123-875-11	ELECT	10MF	20%	50V
C818	1-124-927-11	ELECT	4.7MF	20%	50V
C851	1-102-121-00	CERAMIC	0.0022MF	10%	50V
C852	1-124-499-11	ELECT	1MF	20%	50V
C853	1-123-875-11	ELECT	10MF	20%	50V
C854	1-130-479-00	MYLAR	0.0047MF	5%	50V
C855	1-123-875-11	ELECT	10MF	20%	50V
C857	1-123-875-11	ELECT	10MF	20%	50V

No.	Part No.	Description	Remark
		CONNECTOR	
CN101	*1-560-893-00	PIN, CONNECTOR 5P	
CN102	*1-560-892-00	PIN, CONNECTOR 4P	
		IC	
IC101	8-759-604-16	IC M50434-110SP	
IC102	8-759-602-52	IC M58658P	
IC701	8-752-030-26	IC CXA1011P	
IC751	8-752-030-26	IC CXA1011P	
IC801	8-752-011-20	IC CX20112	
IC850	8-759-602-48	IC M5201L	
		COIL	
L851	1-410-071-11	INDUCTOR 10MMH	
		TRANSISTOR	
Q851	8-729-178-54	TRANSISTOR 2SC2785-F	
Q852	8-729-178-54	TRANSISTOR 2SC2785-F	
Q853	8-729-117-54	TRANSISTOR 2SA1175-F	
Q854	8-729-178-54	TRANSISTOR 2SC2785-F	
		RESISTOR	
R100	1-249-429-11	CARBON 10K 5% 1/4W	
R102	1-249-429-11	CARBON 10K 5% 1/4W	
R103	1-249-429-11	CARBON 10K 5% 1/4W	
R104	1-249-429-11	CARBON 10K 5% 1/4W	
R107	1-249-429-11	CARBON 10K 5% 1/4W	
R701	1-249-429-11	CARBON 10K 5% 1/4W	
R702	1-249-426-11	CARBON 5.6K 5% 1/4W	
R703	1-249-411-11	CARBON 330 5% 1/4W	
R704	1-215-487-00	METAL 560K 1% 1/6W	
R705	1-215-453-00	METAL 22K 1% 1/6W	
R706	1-249-420-11	CARBON 1.8K 5% 1/4W	
R707	1-249-421-11	CARBON 2.2K 5% 1/4W	
R708	1-249-435-11	CARBON 33K 5% 1/4W	
R709	1-249-411-11	CARBON 330 5% 1/4W	
R751	1-249-429-11	CARBON 10K 5% 1/4W	
R752	1-249-426-11	CARBON 5.6K 5% 1/4W	
R753	1-249-411-11	CARBON 330 5% 1/4W	
R754	1-215-487-00	METAL 560K 1% 1/6W	
R755	1-215-453-00	METAL 22K 1% 1/6W	
R756	1-249-420-11	CARBON 1.8K 5% 1/4W	
R757	1-249-421-11	CARBON 2.2K 5% 1/4W	
R758	1-249-435-11	CARBON 33K 5% 1/4W	
R759	1-249-411-11	CARBON 330 5% 1/4W	
R760	1-215-421-00	METAL 1K 1% 1/6W	
R761	1-215-421-00	METAL 1K 1% 1/6W	
R802	1-215-469-00	METAL 100K 1% 1/6W	
R803	1-215-469-00	METAL 100K 1% 1/6W	
R804	1-249-441-11	CARBON 100K 5% 1/4W	
R808	1-249-429-11	CARBON 10K 5% 1/4W	
R809	1-249-414-11	CARBON 560 5% 1/4W	

When indicating parts by reference number, please include the board name.

No.	Part No.	Description				Remark
R813	1-215-430-00	METAL	2.4K	1%	1/6W	
R814	1-249-428-11	CARBON	8.2K	5%	1/4W	
R815	1-249-423-11	CARBON	3.3K	5%	1/4W	
R819	1-247-903-00	CARBON	1M	5%	1/4W	
R820	1-249-415-11	CARBON	680	5%	1/4W	
R821	1-249-429-11	CARBON	10K	5%	1/4W	
R851	1-249-437-11	CARBON	47K	5%	1/4W	
R852	1-249-429-11	CARBON	10K	5%	1/4W	
R853	1-249-418-11	CARBON	1.2K	5%	1/4W	
R854	1-249-413-11	CARBON	470	5%	1/4W	
R855	1-249-418-11	CARBON	1.2K	5%	1/4W	
R856	1-249-429-11	CARBON	10K	5%	1/4W	
R857	1-249-425-11	CARBON	4.7K	5%	1/4W	
R858	1-249-438-11	CARBON	56K	5%	1/4W	
R859	1-249-425-11	CARBON	4.7K	5%	1/4W	
R860	1-249-435-11	CARBON	33K	5%	1/4W	
		VARIABLE RESISTOR				
RV702	1-228-993-00	RES, ADJ, CARBON 4.7K				
RV752	1-228-993-00	RES, ADJ, CARBON 4.7K				
RV802	1-228-996-00	RES, ADJ, CARBON 47K				
RV803	1-228-997-00	RES, ADJ, CARBON 100K				
RV804	1-228-999-00	RES, ADJ, CARBON 470K				
RV805	1-228-994-00	RES, ADJ, METAL GLAZE 10K				
RV806	1-228-994-00	RES, ADJ, CARBON 10K				
		CONNECTOR				
W103	1-563-719-11	CONNECTOR, BOARD TO BOARD 10P				
W801	1-563-718-11	CONNECTOR, BOARD TO BOARD 8P				
		CRYSTAL				
X101	1-567-152-00	OSCILLATOR, CERAMIC (4MHz)				
**********						
*A-7060-465-A		PR-12 BOARD, COMPLETE				
		**********				
		CONNECTOR				
CN001	1-506-481-11	PIN, CONNECTOR 2P				
CN002	1-506-483-21	PIN, CONNECTOR 4P				
		DIODE				
D001	8-719-911-19	DIODE 1SS119				
D002	8-719-911-19	DIODE 1SS119				
D003	8-719-911-19	DIODE 1SS119				
D005	8-719-911-19	DIODE 1SS119				
		SWITCH				
S001	1-553-716-11	SWITCH, SLIDE (AUTO INDEX)				
S002	1-553-716-11	SWITCH, SLIDE (COMMAND)				
S003	1-553-716-11	SWITCH, SLIDE (ANT SW)				
S004	1-554-174-00	SWITCH, KEY BOARD (SLOW/STILL ▼)				
S005	1-554-174-00	SWITCH, KEY BOARD (SLOW/STILL ▲)				
S006	1-553-716-11	SWITCH, SLIDE (AUTO STEREO)				
S008	1-554-174-00	SWITCH, KEY BOARD (ERASE)				
S009	1-554-174-00	SWITCH, KEY BOARD (ADD)				
S011	1-554-174-00	SWITCH, KEY BOARD (NORMAL/CATV)				
**********						
*1-621-991-11		DS-15 BOARD				
		**********				
*1-533-189-11		HOLDER, FUSE				
		CAPACITOR				
C401 ⚠	1-136-212-12	FILM	0.1MF	20%	250V	
		CONNECTOR				
CN401	*1-560-891-00	PIN, CONNECTOR 3P				
		FUSE				
F401 ⚠	1-532-536-00	FUSE, GLASS-TUBE				
		RESISTOR				
R402 ⚠	1-202-729-00	SOLID	6.8M	10%	1/2W	
		TRANSFORMER				
T402 ⚠	1-421-357-31	TRANSFORMER, LINE FILTER				
**********						
*1-623-612-11		TM-94 BOARD				
		**********				
*3-716-962-01		BRACKET (AU)				
7-685-646-79		SCREW +BVTP 3X8 TYPE2 IT-3				
7-685-646-79		SCREW +BVTP 3X8 TYPE2				
		CAPACITOR				
C001	1-130-495-00	MYLAR	0.1MF	5%	50V	
C002	1-124-925-11	ELECT	2.2MF	20%	50V	
C003	1-101-004-00	CERAMIC	0.01MF		50V	
		CONNECTOR				
CN001	*1-564-019-11	PIN, CONNECTOR 9P				
		IC				
IC001	8-759-200-90	IC TC4538BP				
IC002	8-759-240-11	IC TC4011BP				
IC003	8-759-240-11	IC TC4011BP				
		RESISTOR				
R001	1-249-433-11	CARBON	22K	5%	1/4W	
R002	1-249-434-11	CARBON	27K	5%	1/4W	

The components identified by mark ⚠ or dotted line with mark ⚠ are critical for safety.
Replace only with part number specified.

Les composants identifiés par une marque ⚠ sont critiques pour la sécurité.
Ne les remplacer que par une pièce portant le numéro spécifé.

When indicating parts by reference number, please include the board name.

No.	Part No.	Description		Remark
		VARIABLE RESISTOR		
RV001	1-228-996-00	RES, ADJ, CARBON 47K		
**********				
	*A-7061-366-A	RP-68 BOARD, COMPLETE		
		**********		
		CAPACITOR		
C101	1-135-148-21	TANTAL. CHIP 1.5MF	20%	10V
C102	1-135-148-21	TANTAL. CHIP 1.5MF	20%	10V
C103	1-163-021-00	CERAMIC CHIP 0.01MF		50V
C104	1-163-021-00	CERAMIC CHIP 0.01MF		50V
C105	1-135-161-21	TANTAL. CHIP 22MF	20%	6.3V
C106	1-163-038-00	CERAMIC CHIP 0.1MF		25V
C107	1-163-038-00	CERAMIC CHIP 0.1MF		25V
C108	1-135-161-21	TANTAL. CHIP 22MF	20%	6.3V
C109	1-163-021-00	CERAMIC CHIP 0.01MF		50V
C110	1-163-809-11	CERAMIC CHIP 0.047MF	10%	25V
C111	1-163-033-00	CERAMIC CHIP 0.022MF		50V
C112	1-163-021-00	CERAMIC CHIP 0.01MF		50V
C113	1-163-092-00	CERAMIC CHIP 9PF	0.25PF	50V
C114	1-162-993-11	CERAMIC CHIP 0.22MF	10%	16V
C115	1-163-021-00	CERAMIC CHIP 0.01MF		50V
C116	1-163-809-11	CERAMIC CHIP 0.047MF	10%	25V
C117	1-163-033-00	CERAMIC CHIP 0.022MF		50V
C118	1-163-021-00	CERAMIC CHIP 0.01MF		50V
C119	1-163-092-00	CERAMIC CHIP 9PF	0.25PF	50V
C120	1-162-993-11	CERAMIC CHIP 0.22MF	10%	16V
C121	1-163-021-00	CERAMIC CHIP 0.01MF	10%	50V
C122	1-163-088-00	CERAMIC CHIP 5PF	0.25PF	50V
C123	1-163-021-00	CERAMIC CHIP 0.01MF		50V
C124	1-163-077-00	CERAMIC CHIP 0.1MF		50V
C125	1-135-161-21	TANTAL. CHIP 22MF	20%	6.3V
C126	1-163-021-00	CERAMIC CHIP 0.01MF		50V
C127	1-163-021-00	CERAMIC CHIP 0.01MF		50V
C128	1-124-438-00	ELECT 1MF	20%	50V
C129	1-135-161-21	TANTAL. CHIP 22MF	20%	6.3V
C130	1-163-021-00	CERAMIC CHIP 0.01MF		50V
C131	1-163-021-00	CERAMIC CHIP 0.01MF	10%	50V
C132	1-135-091-00	TANTAL. CHIP 1MF	20%	16V
C133	1-163-088-00	CERAMIC CHIP 5PF	0.25PF	50V
C134	1-163-035-00	CERAMIC CHIP 0.047MF		50V
C136	1-163-017-00	CERAMIC CHIP 0.0047MF	10%	50V
C139	1-163-059-00	CERAMIC CHIP 0.01MF		50V
C140	1-135-159-21	TANTAL. CHIP 10MF	20%	16V
C141	1-163-105-00	CERAMIC CHIP 33PF	5%	50V
C142	1-163-129-00	CERAMIC CHIP 330PF	5%	50V
C143	1-163-021-00	CERAMIC CHIP 0.01MF		50V
C144	1-135-157-21	TANTAL. CHIP 10MF	20%	6.3V
C145	1-163-021-00	CERAMIC CHIP 0.01MF		50V
C146	1-163-127-00	CERAMIC CHIP 270PF	5%	50V
C147	1-163-241-11	CERAMIC CHIP 39PF	5%	50V
C148	1-163-809-11	CERAMIC CHIP 0.047MF	10%	25V
C149	1-163-091-00	CERAMIC CHIP 8PF	0.25PF	50V
C150	1-163-809-11	CERAMIC CHIP 0.047MF	10%	25V
C151	1-163-090-00	CERAMIC CHIP 7PF	0.25PF	50V
C153	1-163-009-11	CERAMIC CHIP 0.001MF	10%	50V
C160	1-135-157-21	TANTAL. CHIP 10MF	20%	6.3V
C201	1-135-148-21	TANTAL. CHIP 1.5MF	20%	10V
C202	1-135-148-21	TANTAL. CHIP 1.5MF	20%	10V
C203	1-163-021-00	CERAMIC CHIP 0.01MF		50V
C204	1-163-021-00	CERAMIC CHIP 0.01MF		50V
C205	1-135-161-21	TANTAL. CHIP 22MF	20%	6.3V
C206	1-163-038-00	CERAMIC CHIP 0.1MF		25V
C207	1-163-038-00	CERAMIC CHIP 0.1MF		25V
C208	1-135-161-21	TANTAL. CHIP 22MF	20%	6.3V
C209	1-163-021-00	CERAMIC CHIP 0.01MF		50V
C210	1-163-809-11	CERAMIC CHIP 0.047MF	10%	25V
C211	1-163-021-00	CERAMIC CHIP 0.01MF		50V
C212	1-163-021-00	CERAMIC CHIP 0.01MF		50V
C213	1-163-092-00	CERAMIC CHIP 9PF	0.25PF	50V
C214	1-162-993-11	CERAMIC CHIP 0.22MF	10%	16V
C215	1-163-021-00	CERAMIC CHIP 0.01MF		50V
C216	1-163-809-11	CERAMIC CHIP 0.047MF	10%	25V
C217	1-163-021-00	CERAMIC CHIP 0.01MF		50V
C218	1-163-021-00	CERAMIC CHIP 0.01MF		50V
C219	1-163-092-00	CERAMIC CHIP 9PF	0.25PF	50V
C220	1-162-993-11	CERAMIC CHIP 0.22MF	10%	16V
C221	1-163-021-00	CERAMIC CHIP 0.01MF	10%	50V
C222	1-163-088-00	CERAMIC CHIP 5PF	0.25PF	50V
C223	1-163-021-00	CERAMIC CHIP 0.01MF		50V
C224	1-163-077-00	CERAMIC CHIP 0.1MF		50V
C225	1-135-161-21	TANTAL. CHIP 22MF	20%	6.3V
C226	1-163-021-00	CERAMIC CHIP 0.01MF		50V
C227	1-163-021-00	CERAMIC CHIP 0.01MF		50V
C228	1-135-091-00	TANTAL. CHIP 1MF	20%	16V
C229	1-135-161-21	TANTAL. CHIP 22MF	20%	6.3V
C230	1-163-021-00	CERAMIC CHIP 0.01MF		50V
C231	1-163-021-00	CERAMIC CHIP 0.01MF	10%	50V
C232	1-135-091-00	TANTAL. CHIP 1MF	20%	16V
C233	1-163-088-00	CERAMIC CHIP 5PF	0.25PF	50V
C239	1-163-021-00	CERAMIC CHIP 0.01MF		50V
C240	1-163-038-00	CERAMIC CHIP 0.1MF		25V
C241	1-163-038-00	CERAMIC CHIP 0.1MF		25V
C242	1-163-021-00	CERAMIC CHIP 0.01MF		50V
C243	1-135-157-21	TANTAL. CHIP 10MF	20%	6.3V
C244	1-163-021-00	CERAMIC CHIP 0.01MF		50V
C245	1-163-121-00	CERAMIC CHIP 150PF	5%	50V
C246	1-163-105-00	CERAMIC CHIP 33PF	5%	50V
C247	1-163-809-11	CERAMIC CHIP 0.047MF	10%	25V
C248	1-163-090-00	CERAMIC CHIP 7PF	0.25PF	50V
C249	1-163-121-00	CERAMIC CHIP 150PF	5%	50V
C250	1-163-103-00	CERAMIC CHIP 27PF	5%	50V
C251	1-163-809-11	CERAMIC CHIP 0.047MF	10%	25V
C252	1-163-090-00	CERAMIC CHIP 7PF	0.25PF	50V

When indicating parts by reference number, please include the board name.

No.	Part No.	Description		Remark
C253	1-163-009-11	CERAMIC CHIP 0.001MF	10%	50V
C260	1-135-157-21	TANTAL. CHIP 10MF	20%	6.3V
C301	1-163-021-00	CERAMIC CHIP 0.01MF		50V
C302	1-163-021-00	CERAMIC CHIP 0.01MF		50V
C303	1-135-159-21	TANTAL. CHIP 10MF	20%	16V
C304	1-163-021-00	CERAMIC CHIP 0.01MF		50V
C305	1-163-021-00	CERAMIC CHIP 0.01MF		50V
C306	1-163-038-00	CERAMIC CHIP 0.1MF		25V
C307	1-163-021-00	CERAMIC CHIP 0.01MF		50V
C308	1-163-021-00	CERAMIC CHIP 0.01MF		50V
C309	1-126-157-11	ELECT 10MF	20%	16V
C401	1-163-009-11	CERAMIC CHIP 0.001MF	10%	50V
C402	1-163-021-00	CERAMIC CHIP 0.01MF		50V
C403	1-163-009-11	CERAMIC CHIP 0.001MF	10%	50V
C404	1-163-117-00	CERAMIC CHIP 100PF	5%	50V
C405	1-163-117-00	CERAMIC CHIP 100PF	5%	50V
C406	1-163-121-00	CERAMIC CHIP 150PF	5%	50V
C407	1-163-115-00	CERAMIC CHIP 82PF	5%	50V
C408	1-163-021-00	CERAMIC CHIP 0.01MF		50V
C409	1-163-021-00	CERAMIC CHIP 0.01MF		50V
C410	1-163-021-00	CERAMIC CHIP 0.01MF		50V

CONNECTOR

CN001	1-562-629-11	SOCKET, CONNECTOR 19P	
CN002	*1-506-467-11	PIN, CONNECTOR 2P	
CN003	*1-506-471-11	PIN, CONNECTOR 6P	
CN004	1-506-470-11	PIN, CONNECTOR 5P	
CN005	1-506-473-11	PIN, CONNECTOR 8P	
CN006	1-506-468-11	PIN, CONNECTOR 3P	
CN007	1-506-468-11	PIN, CONNECTOR 3P	
CN008	1-506-486-11	PIN, CONNECTOR 7P	

DIODE

D101	8-719-100-03	DIODE 1S2835
D102	8-719-801-48	DIODE 1SS193
D103	8-719-801-41	DIODE 1SS196
D202	8-719-801-48	DIODE 1SS193
D203	8-719-801-41	DIODE 1SS196

IC

IC001	8-752-033-00	IC CXA1234AR
IC002	8-752-033-00	IC CXA1234AR

COIL

L101	1-410-656-11	INDUCTOR CHIP	150UH
L102	1-410-385-11	INDUCTOR CHIP	22UH
L103	1-408-973-21	INDUCTOR	18UH
L104	1-408-973-21	INDUCTOR	18UH
L105	1-410-381-11	INDUCTOR CHIP	10UH
L106	1-410-385-11	INDUCTOR CHIP	22UH
L109	1-410-393-11	INDUCTOR CHIP	100UH
L201	1-410-656-11	INDUCTOR CHIP	150UH
L202	1-410-385-11	INDUCTOR CHIP	22UH
L203	1-408-973-21	INDUCTOR	18UH
L204	1-408-973-21	INDUCTOR	18UH
L205	1-410-381-11	INDUCTOR CHIP	10UH
L206	1-410-385-11	INDUCTOR CHIP	22UH
L209	1-410-393-11	INDUCTOR CHIP	100UH
L301	1-408-970-21	INDUCTOR	10UH
L302	1-410-387-11	INDUCTOR CHIP	33UH
L401	1-408-948-00	INDUCTOR	220UH
L402	1-408-970-21	INDUCTOR	10UH

TRANSISTOR

Q101	8-729-202-38	TRANSISTOR 2SC3326N
Q102	8-729-202-38	TRANSISTOR 2SC3326N
Q103	8-729-901-05	TRANSISTOR DTA124EK
Q104	8-729-312-22	TRANSISTOR 2SA1122
Q105	8-729-901-01	TRANSISTOR DTC144EK
Q106	8-729-102-07	TRANSISTOR 2SC2223-F13
Q107	8-729-102-07	TRANSISTOR 2SC2223-F13
Q201	8-729-202-38	TRANSISTOR 2SC3326N
Q202	8-729-202-38	TRANSISTOR 2SC3326N
Q203	8-729-901-05	TRANSISTOR DTA124EK
Q204	8-729-102-07	TRANSISTOR 2SC2223-F13
Q205	8-729-102-07	TRANSISTOR 2SC2223-F13
Q301	8-729-100-66	TRANSISTOR 2SC1623
Q302	8-729-901-01	TRANSISTOR DTC144EK
Q303	8-729-901-01	TRANSISTOR DTC144EK
Q304	8-729-100-66	TRANSISTOR 2SC1623
Q307	8-729-100-66	TRANSISTOR 2SC1623
Q308	8-729-100-66	TRANSISTOR 2SC1623
Q402	8-729-100-76	TRANSISTOR 2SA812
Q403	8-729-117-54	TRANSISTOR 2SA1175-F
Q405	8-729-312-22	TRANSISTOR 2SA1122

RESISTOR

R101	1-216-214-00	METAL GLAZE	4.7K	5%	1/8W
R102	1-216-065-00	METAL GLAZE	4.7K	5%	1/10W
R103	1-216-214-00	METAL GLAZE	4.7K	5%	1/8W
R104	1-216-065-00	METAL GLAZE	4.7K	5%	1/10W
R105	1-216-083-00	METAL GLAZE	27K	5%	1/10W
R106	1-216-089-00	METAL GLAZE	47K	5%	1/10W
R107	1-216-077-00	METAL GLAZE	15K	5%	1/10W
R108	1-216-077-00	METAL GLAZE	15K	5%	1/10W
R109	1-216-055-00	METAL GLAZE	1.8K	5%	1/10W
R110	1-216-089-00	METAL GLAZE	47K	5%	1/10W
R111	1-216-081-00	METAL GLAZE	22K	5%	1/10W
R112	1-216-091-00	METAL GLAZE	56K	5%	1/10W
R113	1-216-077-00	METAL GLAZE	15K	5%	1/10W
R114	1-216-075-00	METAL GLAZE	12K	5%	1/10W
R115	1-216-055-00	METAL GLAZE	1.8K	5%	1/10W
R116	1-216-089-00	METAL GLAZE	47K	5%	1/10W
R117	1-216-053-00	METAL GLAZE	1.5K	5%	1/10W
R118	1-216-035-00	METAL GLAZE	270	5%	1/10W
R119	1-216-025-00	METAL GLAZE	100	5%	1/10W

When indicating parts by reference number, please include the board name.

No.	Part No.	Description				Remark
R120	1-216-025-00	METAL GLAZE	100	5%	1/10W	
R121	1-216-053-00	METAL GLAZE	1.5K	5%	1/10W	
R122	1-216-682-11	METAL CHIP	20K	0.50%	1/10W	
R123	1-216-683-11	METAL CHIP	22K	0.50%	1/10W	
R126	1-216-061-00	METAL GLAZE	3.3K	5%	1/10W	
R127	1-216-089-00	METAL GLAZE	47K	5%	1/10W	
R128	1-216-049-00	METAL GLAZE	1K	5%	1/10W	
R131	1-216-061-00	METAL GLAZE	3.3K	5%	1/10W	
R134	1-216-097-00	METAL GLAZE	100K	5%	1/10W	
R135	1-216-097-00	METAL GLAZE	100K	5%	1/10W	
R136	1-216-073-00	METAL GLAZE	10K	5%	1/10W	
R137	1-216-001-00	METAL GLAZE	10	5%	1/10W	
R138	1-216-031-00	METAL GLAZE	180	5%	1/10W	
R139	1-216-081-00	METAL GLAZE	22K	5%	1/10W	
R140	1-216-073-00	METAL GLAZE	10K	5%	1/10W	
R141	1-216-081-00	METAL GLAZE	22K	5%	1/10W	
R142	1-216-001-00	METAL GLAZE	10	5%	1/10W	
R143	1-216-031-00	METAL GLAZE	180	5%	1/10W	
R144	1-216-296-00	METAL GLAZE	0	5%	1/8W	
R201	1-216-214-00	METAL GLAZE	4.7K	5%	1/8W	
R202	1-216-065-00	METAL GLAZE	4.7K	5%	1/10W	
R203	1-216-214-00	METAL GLAZE	4.7K	5%	1/8W	
R204	1-216-065-00	METAL GLAZE	4.7K	5%	1/10W	
R205	1-216-085-00	METAL GLAZE	33K	5%	1/10W	
R206	1-216-091-00	METAL GLAZE	56K	5%	1/10W	
R207	1-216-079-00	METAL GLAZE	18K	5%	1/10W	
R208	1-216-076-00	METAL GLAZE	13K	5%	1/10W	
R209	1-216-054-00	METAL GLAZE	1.6K	5%	1/10W	
R210	1-216-089-00	METAL GLAZE	47K	5%	1/10W	
R211	1-216-748-11	METAL GLAZE	39K	5%	1/10W	
R212	1-216-091-00	METAL GLAZE	56K	5%	1/10W	
R213	1-216-079-00	METAL GLAZE	18K	5%	1/10W	
R214	1-216-075-00	METAL GLAZE	12K	5%	1/10W	
R215	1-216-054-00	METAL GLAZE	1.6K	5%	1/10W	
R216	1-216-089-00	METAL GLAZE	47K	5%	1/10W	
R217	1-216-053-00	METAL GLAZE	1.5K	5%	1/10W	
R218	1-216-049-00	METAL GLAZE	1K	5%	1/10W	
R219	1-216-025-00	METAL GLAZE	100	5%	1/10W	
R220	1-216-025-00	METAL GLAZE	100	5%	1/10W	
R221	1-216-053-00	METAL GLAZE	1.5K	5%	1/10W	
R231	1-216-061-00	METAL GLAZE	3.3K	5%	1/10W	
R232	1-216-061-00	METAL GLAZE	3.3K	5%	1/10W	
R233	1-216-061-00	METAL GLAZE	3.3K	5%	1/10W	
R234	1-216-097-00	METAL GLAZE	100K	5%	1/10W	
R235	1-216-097-00	METAL GLAZE	100K	5%	1/10W	
R236	1-216-031-00	METAL GLAZE	180	5%	1/10W	
R237	1-216-001-00	METAL GLAZE	10	5%	1/10W	
R238	1-216-081-00	METAL GLAZE	22K	5%	1/10W	
R239	1-216-073-00	METAL GLAZE	10K	5%	1/10W	
R240	1-216-073-00	METAL GLAZE	10K	5%	1/10W	
R241	1-216-081-00	METAL GLAZE	22K	5%	1/10W	
R242	1-216-001-00	METAL GLAZE	10	5%	1/10W	
R243	1-216-031-00	METAL GLAZE	180	5%	1/10W	
R244	1-216-296-00	METAL GLAZE	0	5%	1/8W	
R301	1-216-089-00	METAL GLAZE	47K	5%	1/10W	
R302	1-216-073-00	METAL GLAZE	10K	5%	1/10W	
R303	1-216-045-00	METAL GLAZE	680	5%	1/10W	
R304	1-216-091-00	METAL GLAZE	56K	5%	1/10W	
R305	1-216-061-00	METAL GLAZE	3.3K	5%	1/10W	
R306	1-216-085-00	METAL GLAZE	33K	5%	1/10W	
R307	1-216-077-00	METAL GLAZE	15K	5%	1/10W	
R308	1-216-039-00	METAL GLAZE	390	5%	1/10W	
R309	1-216-047-00	METAL GLAZE	820	5%	1/10W	
R310	1-216-035-00	METAL GLAZE	270	5%	1/10W	
R311	1-216-041-00	METAL GLAZE	470	5%	1/10W	
R401	1-216-085-00	METAL GLAZE	33K	5%	1/10W	
R402	1-216-081-00	METAL GLAZE	22K	5%	1/10W	
R403	1-216-035-00	METAL GLAZE	270	5%	1/10W	
R404	1-216-033-00	METAL GLAZE	220	5%	1/10W	
R405	1-216-021-00	METAL GLAZE	68	5%	1/10W	
R406	1-216-009-00	METAL GLAZE	22	5%	1/10W	
R407	1-216-081-00	METAL GLAZE	22K	5%	1/10W	
R408	1-216-057-00	METAL GLAZE	2.2K	5%	1/10W	
R409	1-216-041-00	METAL GLAZE	470	5%	1/10W	
R410	1-216-041-00	METAL GLAZE	470	5%	1/10W	
R411	1-216-041-00	METAL GLAZE	470	5%	1/10W	
R412	1-216-296-00	METAL GLAZE	0	5%	1/8W	
R413	1-216-296-00	METAL GLAZE	0	5%	1/8W	
R414	1-216-296-00	METAL GLAZE	0	5%	1/8W	
R415	1-216-296-00	METAL GLAZE	0	5%	1/8W	
R421	1-216-295-00	METAL GLAZE	0	5%	1/10W	
R422	1-216-043-00	METAL GLAZE	560	5%	1/10W	
R423	1-216-295-00	METAL GLAZE	0	5%	1/10W	

VARIABLE RESISTOR

RV101	1-230-496-11	RES, ADJ, CARBON 10K	
RV102	1-230-496-11	RES, ADJ, CARBON 10K	
RV201	1-230-496-11	RES, ADJ, CARBON 10K	
RV202	1-230-496-11	RES, ADJ, CARBON 10K	

****

*A-7051-370-A	PW-62 BOARD, COMPLETE	
	**********	
*3-662-205-00	HOLDER (E), LED	
*3-674-390-00	HOLDER (B), LED	
*3-721-598-11	HOLDER (HIFI), LED	
*3-722-119-01	HOLDER, LEVEL METER	

CAPACITOR

C201	1-124-635-00	ELECT	220MF	20%	6.3V
C202	1-124-635-00	ELECT	220MF	20%	6.3V
C301	1-124-257-00	ELECT	2.2MF	20%	35V
C401	1-124-257-00	ELECT	2.2MF	20%	35V

CONNECTOR

CN202	1-506-469-11	PIN, CONNECTOR 4P

When indicating parts by reference number, please include the board name.

No.	Part No.	Description	Remark
		DIODE	
D101	8-719-920-05	DIODE SLP281C-50	
D103	8-719-105-32	DIODE RD2.7M-B2	
D104	8-719-907-29	DIODE EQA11-09A	
D105	8-719-907-29	DIODE EQA11-09A	
D201	8-719-920-05	DIODE TLY123	
D202	8-719-920-05	DIODE TLY123	
D203	8-719-920-05	DIODE TLY123	
		IC	
IC101	8-741-138-70	IC BX-1387	
IC201	8-759-745-64	IC NJM4560M	
		JACK	
J201	1-507-792-00	JACK (HEADPHONES)	
		COIL	
L201	1-408-972-21	INDUCTOR 15UH	
		LEVEL METER	
LMU001	1-520-503-11	METER UNIT, LED LEVEL	
		RESISTOR	
R101	1-216-037-00	METAL GLAZE 330 5% 1/10W	
R103	1-216-073-00	METAL GLAZE 10K 5% 1/10W	
R201	1-216-029-00	METAL GLAZE 150 5% 1/10W	
R202	1-216-029-00	METAL GLAZE 150 5% 1/10W	
R203	1-216-029-00	METAL GLAZE 150 5% 1/10W	
R301	1-216-017-00	METAL GLAZE 47 5% 1/10W	
R302	1-216-065-00	METAL GLAZE 4.7K 5% 1/10W	
R303	1-216-075-00	METAL GLAZE 12K 5% 1/10W	
R304	1-216-021-00	METAL GLAZE 68 5% 1/10W	
R401	1-216-017-00	METAL GLAZE 47 5% 1/10W	
R402	1-216-065-00	METAL GLAZE 4.7K 5% 1/10W	
R403	1-216-075-00	METAL GLAZE 12K 5% 1/10W	
R404	1-216-021-00	METAL GLAZE 68 5% 1/10W	
		VARIABLE RESISTOR	
RV201	1-228-988-00	RES, VAR, CARBON 10K/10K	
RV301	1-237-589-11	RES, VAR, SLIDE 10K/10K	
		SWITCH	
S101	1-554-174-00	SWITCH, KEY BOARD (ON/STANDBY)	

****

No.	Part No.	Description	Remark
	*A-7061-371-B	VI-57 BOARD, COMPLETE ********** (Including the CH-44 Board(IC010), JG-11 , NC-8 Board and YC-56 Board)	
	*3-703-353-07	SUPPORT, PC BOARD	
	*3-710-578-01	COVER, VOLUME, 6 MOLD	
	*3-722-118-01	RETAINER, JG PC BOARD	
	7-685-646-79	SCREW +BVTP 3X8 TYPE2 IT-3	
	7-685-646-79	SCREW +BVTP 3X8 TYPE2	
		CAPACITOR	
C001	1-163-021-00	CERAMIC CHIP 0.01MF 50V	
C002	1-126-177-11	ELECT 100MF 20% 6.3V	
C003	1-126-157-11	ELECT 10MF 20% 16V	
C089	1-163-035-00	CERAMIC CHIP 0.047MF 50V	
C101	1-163-038-00	CERAMIC CHIP 0.1MF 25V	
C102	1-163-133-00	CERAMIC CHIP 470PF 5% 50V	
C103	1-163-035-00	CERAMIC CHIP 0.047MF 50V	
C104	1-163-038-00	CERAMIC CHIP 0.1MF 25V	
C105	1-163-009-11	CERAMIC CHIP 0.001MF 10% 50V	
C106	1-163-021-00	CERAMIC CHIP 0.01MF 50V	
C107	1-163-035-00	CERAMIC CHIP 0.047MF 50V	
C108	1-126-177-11	ELECT 100MF 20% 6.3V	
C109	1-126-157-11	ELECT 10MF 20% 16V	
C110	1-163-035-00	CERAMIC CHIP 0.047MF 50V	
C111	1-124-438-00	ELECT 1MF 20% 50V	
C112	1-126-154-11	ELECT 47MF 20% 6.3V	
C113	1-126-094-11	ELECT 4.7MF 20% 25V	
C114	1-126-094-11	ELECT 4.7MF 20% 25V	
C115	1-163-035-00	CERAMIC CHIP 0.047MF 50V	
C116	1-124-638-11	ELECT 22MF 20% 6.3V	
C117	1-163-113-00	CERAMIC CHIP 68PF 5% 50V	
C118	1-163-131-00	CERAMIC CHIP 390PF 5% 50V	
C119	1-163-129-00	CERAMIC CHIP 330PF 5% 50V	
C120	1-163-128-00	CERAMIC CHIP 300PF 5% 50V	
C121	1-163-021-00	CERAMIC CHIP 0.01MF 10% 50V	
C122	1-163-109-00	CERAMIC CHIP 47PF 5% 50V	
C123	1-163-Q88-00	CERAMIC CHIP 5PF 0.25PF 50V	
C124	1-126-094-11	ELECT 4.7MF 20% 25V	
C125	1-163-021-00	CERAMIC CHIP 0.01MF 50V	
C126	1-163-035-00	CERAMIC CHIP 0.047MF 50V	
C127	1-163-035-00	CERAMIC CHIP 0.047MF 50V	
C128	1-126-157-11	ELECT 10MF 20% 16V	
C129	1-163-009-11	CERAMIC CHIP 0.001MF 10% 50V	
C130	1-163-134-00	CERAMIC CHIP 510PF 5% 50V	
C131	1-163-021-00	CERAMIC CHIP 0.01MF 10% 50V	
C132	1-163-035-00	CERAMIC CHIP 0.047MF 50V	
C133	1-124-464-11	ELECT 0.22MF 20% 50V	
C134	1-163-035-00	CERAMIC CHIP 0.047MF 50V	
C135	1-126-157-11	ELECT 10MF 20% 16V	
C136	1-126-157-11	ELECT 10MF 20% 16V	
C137	1-163-121-00	CERAMIC CHIP 150PF 5% 50V	
C139	1-163-038-00	CERAMIC CHIP 0.1MF 25V	

When indicating parts by reference number, please include the board name.

No.	Part No.	Description			Remark
C140	1-163-241-11	CERAMIC CHIP	39PF	5%	50V
C141	1-163-111-00	CERAMIC CHIP	56PF	5%	50V
C142	1-124-229-00	ELECT	33MF	20%	10V
C143	1-163-123-00	CERAMIC CHIP	180PF	5%	50V
C144	1-163-137-00	CERAMIC CHIP	680PF	5%	50V
C147	1-163-038-00	CERAMIC CHIP	0.1MF		25V
C148	1-126-157-11	ELECT	10MF	20%	16V
C150	1-126-157-11	ELECT	10MF	20%	16V
C151	1-126-157-11	ELECT	10MF	20%	16V
C153	1-163-093-00	CERAMIC CHIP	10PF	5%	50V
C154	1-163-128-00	CERAMIC CHIP	300PF	5%	50V
C155	1-124-589-11	ELECT	47MF	20%	10V
C158	1-163-117-00	CERAMIC CHIP	100PF	5%	50V
C160	1-163-119-00	CERAMIC CHIP	120PF	5%	50V
C161	1-163-091-00	CERAMIC CHIP	8PF	0.25PF	50V
C162	1-163-105-00	CERAMIC CHIP	33PF	5%	50V
C163	1-123-875-11	ELECT	10MF	20%	50V
C164	1-163-111-00	CERAMIC CHIP	56PF	5%	50V
C180	1-163-035-00	CERAMIC CHIP	0.047MF		50V
C181	1-163-035-00	CERAMIC CHIP	0.047MF		50V
C182	1-126-157-11	ELECT	10MF	20%	16V
C183	1-163-035-00	CERAMIC CHIP	0.047MF		50V
C184	1-126-157-11	ELECT	10MF	20%	16V
C185	1-163-035-00	CERAMIC CHIP	0.047MF		50V
C186	1-126-157-11	ELECT	10MF	20%	16V
C187	1-126-157-11	ELECT	10MF	20%	16V
C190	1-126-154-11	ELECT	47MF	20%	6.3V
C191	1-163-131-00	CERAMIC CHIP	390PF	5%	50V
C195	1-163-099-00	CERAMIC CHIP	18PF	5%	50V
C196	1-163-117-00	CERAMIC CHIP	100PF	5%	50V
C198	1-124-638-11	ELECT	22MF	20%	6.3V
C201	1-163-009-11	CERAMIC CHIP	0.001MF	10%	50V
C202	1-163-035-00	CERAMIC CHIP	0.047MF		50V
C203	1-126-177-11	ELECT	100MF	20%	6.3V
C204	1-163-009-11	CERAMIC CHIP	0.001MF	10%	50V
C205	1-126-162-11	ELECT	3.3MF	20%	50V
C206	1-163-105-00	CERAMIC CHIP	33PF	5%	50V
C207	1-163-125-00	CERAMIC CHIP	220PF	5%	50V
C208	1-163-105-00	CERAMIC CHIP	33PF	5%	50V
C209	1-163-021-00	CERAMIC CHIP	0.01MF		50V
C211	1-163-021-00	CERAMIC CHIP	0.01MF	10%	50V
C212	1-126-094-11	ELECT	4.7MF	20%	25V
C213	1-126-094-11	ELECT	4.7MF	20%	25V
C214	1-124-257-00	ELECT	2.2MF	20%	50V
C215	1-163-133-00	CERAMIC CHIP	470PF	5%	50V
C216	1-163-105-00	CERAMIC CHIP	33PF	5%	50V
C217	1-126-094-11	ELECT	4.7MF	20%	25V
C218	1-163-121-00	CERAMIC CHIP	150PF	5%	50V
C219	1-124-257-00	ELECT	2.2MF	20%	50V
C220	1-163-111-00	CERAMIC CHIP	56PF	5%	50V
C221	1-163-103-00	CERAMIC CHIP	27PF	5%	50V
C222	1-163-021-00	CERAMIC CHIP	0.01MF		50V
C223	1-163-035-00	CERAMIC CHIP	0.047MF		50V

No.	Part No.	Description			Remark
C224	1-163-009-11	CERAMIC CHIP	0.001MF	10%	50V
C225	1-124-638-11	ELECT	22MF	20%	6.3V
C226	1-163-035-00	CERAMIC CHIP	0.047MF		50V
C227	1-124-638-11	ELECT	22MF	20%	6.3V
C228	1-163-035-00	CERAMIC CHIP	0.047MF		50V
C229	1-163-093-00	CERAMIC CHIP	10PF	5%	50V
C231	1-163-111-00	CERAMIC CHIP	56PF	5%	50V
C232	1-163-035-00	CERAMIC CHIP	0.047MF		50V
C234	1-163-093-00	CERAMIC CHIP	10PF	5%	50V
C235	1-126-154-11	ELECT	47MF	20%	6.3V
C236	1-126-154-11	ELECT	47MF	20%	6.3V
C237	1-163-096-00	CERAMIC CHIP	13PF	5%	50V
C238	1-163-113-00	CERAMIC CHIP	68PF	5%	50V
C239	1-163-099-00	CERAMIC CHIP	18PF	5%	50V
C240	1-163-099-00	CERAMIC CHIP	18PF	5%	50V
C301	1-163-119-00	CERAMIC CHIP	120PF	5%	50V
C302	1-163-111-00	CERAMIC CHIP	56PF	5%	50V
C303	1-163-117-00	CERAMIC CHIP	100PF	5%	50V
C304	1-163-125-00	CERAMIC CHIP	220PF	5%	50V
C305	1-163-117-00	CERAMIC CHIP	100PF	5%	50V
C306	1-163-021-00	CERAMIC CHIP	0.01MF		50V
C307	1-163-081-00	CERAMIC CHIP	0.22MF		25V
C308	1-163-133-00	CERAMIC CHIP	470PF	5%	50V
C309	1-163-009-11	CERAMIC CHIP	0.001MF	10%	50V
C310	1-163-129-00	CERAMIC CHIP	330PF	5%	50V
C311	1-163-035-00	CERAMIC CHIP	0.047MF		50V
C312	1-163-109-00	CERAMIC CHIP	47PF	5%	50V
C313	1-163-015-00	CERAMIC CHIP	0.0033MF	10%	50V
C314	1-163-117-00	CERAMIC CHIP	100PF	5%	50V
C315	1-163-105-00	CERAMIC CHIP	33PF	5%	50V
C316	1-163-038-00	CERAMIC CHIP	0.1MF		25V
C317	1-163-117-00	CERAMIC CHIP	100PF	5%	50V
C318	1-163-021-00	CERAMIC CHIP	0.01MF		50V
C319	1-163-104-00	CERAMIC CHIP	30PF	5%	50V
C321	1-163-125-00	CERAMIC CHIP	220PF	5%	50V
C322	1-163-021-00	CERAMIC CHIP	0.01MF		50V
C323	1-163-038-00	CERAMIC CHIP	0.1MF		25V
C325	1-163-038-00	CERAMIC CHIP	0.1MF		25V
C334	1-163-021-00	CERAMIC CHIP	0.01MF		50V
C336	1-163-021-00	CERAMIC CHIP	0.01MF		50V
C401	1-163-035-00	CERAMIC CHIP	0.047MF		50V
C402	1-126-154-11	ELECT	47MF	20%	6.3V
C403	1-163-035-00	CERAMIC CHIP	0.047MF		50V
C404	1-163-145-00	CERAMIC CHIP	0.0015MF	10%	50V
C405	1-163-127-00	CERAMIC CHIP	270PF	5%	50V
C406	1-163-035-00	CERAMIC CHIP	0.047MF		50V
C407	1-163-035-00	CERAMIC CHIP	0.047MF		50V
C408	1-163-115-00	CERAMIC CHIP	82PF	5%	50V
C409	1-163-021-00	CERAMIC CHIP	0.01MF		50V
C410	1-163-090-00	CERAMIC CHIP	7PF	0.25PF	50V
C411	1-163-093-00	CERAMIC CHIP	10PF	5%	50V
C412	1-163-035-00	CERAMIC CHIP	0.047MF		50V
C415	1-163-035-00	CERAMIC CHIP	0.047MF		50V

When indicating parts by reference number, please include the board name.

No.	Part No.	Description		Remark
C416	1-163-035-00	CERAMIC CHIP 0.047MF		50V
C417	1-163-035-00	CERAMIC CHIP 0.047MF		50V
C418	1-163-035-00	CERAMIC CHIP 0.047MF		50V
C419	1-163-035-00	CERAMIC CHIP 0.047MF		50V
C420	1-163-035-00	CERAMIC CHIP 0.047MF		50V
C421	1-163-097-00	CERAMIC CHIP 15PF	5%	50V
C422	1-163-093-00	CERAMIC CHIP 10PF	5%	50V
C423	1-163-099-00	CERAMIC CHIP 18PF	5%	50V
C424	1-163-090-00	CERAMIC CHIP 7PF	0.25PF	50V
C425	1-163-035-00	CERAMIC CHIP 0.047MF		50V
C426	1-163-035-00	CERAMIC CHIP 0.047MF		50V
C427	1-163-035-00	CERAMIC CHIP 0.047MF		50V
C428	1-163-125-00	CERAMIC CHIP 220PF	5%	50V
C429	1-163-021-00	CERAMIC CHIP 0.01MF		50V
C430	1-163-035-00	CERAMIC CHIP 0.047MF		50V
C431	1-163-021-00	CERAMIC CHIP 0.01MF		50V
C432	1-163-101-00	CERAMIC CHIP 22PF	5%	50V
C433	1-126-094-11	ELECT 4.7MF	20%	25V
C434	1-163-021-00	CERAMIC CHIP 0.01MF		50V
C435	1-163-103-00	CERAMIC CHIP 27PF	5%	50V
C437	1-163-093-00	CERAMIC CHIP 10PF	5%	50V
C438	1-163-103-00	CERAMIC CHIP 27PF	5%	50V
C439	1-163-109-00	CERAMIC CHIP 47PF	5%	50V
C440	1-124-463-00	ELECT 0.1MF	20%	50V
C441	1-163-241-11	CERAMIC CHIP 39PF	5%	50V
C442	1-163-241-11	CERAMIC CHIP 39PF	5%	50V
C443	1-163-103-00	CERAMIC CHIP 27PF	5%	50V
C444	1-163-021-00	CERAMIC CHIP 0.01MF		50V
C445	1-126-094-11	ELECT 4.7MF	20%	25V
C448	1-163-093-00	CERAMIC CHIP 10PF	5%	50V
C450	1-124-257-00	ELECT 2.2MF	20%	50V
C464	1-163-115-00	CERAMIC CHIP 82PF	5%	50V
C470	1-163-035-00	CERAMIC CHIP 0.047MF		50V
C473	1-163-035-00	CERAMIC CHIP 0.047MF		50V
C501	1-126-154-11	ELECT 47MF	20%	6.3V
C502	1-163-035-00	CERAMIC CHIP 0.047MF		50V
C503	1-163-021-00	CERAMIC CHIP 0.01MF		50V
C504	1-163-021-00	CERAMIC CHIP 0.01MF		50V
C505	1-163-021-00	CERAMIC CHIP 0.01MF		50V
C506	1-163-035-00	CERAMIC CHIP 0.047MF		50V
C507	1-163-035-00	CERAMIC CHIP 0.047MF		50V
C509	1-163-021-00	CERAMIC CHIP 0.01MF		50V
C510	1-163-035-00	CERAMIC CHIP 0.047MF		50V
C511	1-163-035-00	CERAMIC CHIP 0.047MF		50V
C512	1-163-035-00	CERAMIC CHIP 0.047MF		50V
C515	1-163-035-00	CERAMIC CHIP 0.047MF		50V
C531	1-163-129-00	CERAMIC CHIP 330PF	5%	50V
C532	1-163-119-00	CERAMIC CHIP 120PF	5%	50V
C534	1-163-035-00	CERAMIC CHIP 0.047MF		50V
C535	1-163-097-00	CERAMIC CHIP 15PF	5%	50V
C536	1-163-035-00	CERAMIC CHIP 0.047MF		50V
C537	1-163-101-00	CERAMIC CHIP 22PF	5%	50V
C538	1-163-106-00	CERAMIC CHIP 36PF	5%	50V
C539	1-163-035-00	CERAMIC CHIP 0.047MF		50V
C540	1-126-154-11	ELECT 47MF	20%	6.3V
C541	1-163-035-00	CERAMIC CHIP 0.047MF		50V
C542	1-163-103-00	CERAMIC CHIP 27PF	5%	50V
C601	1-163-101-00	CERAMIC CHIP 22PF	5%	50V
C602	1-163-021-00	CERAMIC CHIP 0.01MF	10%	50V
C603	1-163-035-00	CERAMIC CHIP 0.047MF		50V
C604	1-163-035-00	CERAMIC CHIP 0.047MF		50V
C605	1-163-035-00	CERAMIC CHIP 0.047MF		50V
C610	1-124-257-00	ELECT 2.2MF	20%	50V
C612	1-163-099-00	CERAMIC CHIP 18PF	5%	50V
C613	1-126-094-11	ELECT 4.7MF	20%	25V
C614	1-163-133-00	CERAMIC CHIP 470PF	5%	50V
C701	1-124-471-00	ELECT 1000MF	20%	6.3V
C702	1-163-035-00	CERAMIC CHIP 0.047MF		50V
C703	1-124-471-00	ELECT 1000MF	20%	6.3V
C704	1-124-471-00	ELECT 1000MF	20%	6.3V
C705	1-126-176-11	ELECT 220MF	20%	10V
C706	1-163-035-00	CERAMIC CHIP 0.047MF		50V
C801	1-124-589-11	ELECT 47MF	20%	10V
C802	1-126-154-11	ELECT 47MF	20%	6.3V
C803	1-163-035-00	CERAMIC CHIP 0.047MF		50V
C804	1-163-038-00	CERAMIC CHIP 0.1MF		25V
C805	1-163-038-00	CERAMIC CHIP 0.1MF		25V
C806	1-126-154-11	ELECT 47MF	20%	6.3V
C808	1-126-154-11	ELECT 47MF	20%	6.3V
C809	1-126-157-11	ELECT 10MF	20%	16V
C810	1-163-097-00	CERAMIC CHIP 15PF	5%	50V
C811	1-126-154-11	ELECT 47MF	20%	6.3V
C812	1-163-035-00	CERAMIC CHIP 0.047MF		50V
C813	1-163-021-00	CERAMIC CHIP 0.01MF		50V
C814	1-163-021-00	CERAMIC CHIP 0.01MF		50V
C815	1-163-038-00	CERAMIC CHIP 0.1MF		25V
C816	1-163-038-00	CERAMIC CHIP 0.1MF		25V
C817	1-126-157-11	ELECT 10MF	20%	16V
C818	1-163-021-00	CERAMIC CHIP 0.01MF		50V
C819	1-163-021-00	CERAMIC CHIP 0.01MF		50V
C820	1-163-021-00	CERAMIC CHIP 0.01MF		50V
C821	1-163-021-00	CERAMIC CHIP 0.01MF		50V
C822	1-126-157-11	ELECT 10MF	20%	16V
C823	1-163-021-00	CERAMIC CHIP 0.01MF		50V
C901	1-163-021-00	CERAMIC CHIP 0.01MF		50V
C902	1-126-157-11	ELECT 10MF	20%	16V
C903	1-163-021-00	CERAMIC CHIP 0.01MF		50V
C904	1-163-809-11	CERAMIC CHIP 0.047MF	10%	25V
C905	1-163-035-00	CERAMIC CHIP 0.047MF		50V
C906	1-163-809-11	CERAMIC CHIP 0.047MF	10%	25V
C907	1-163-021-00	CERAMIC CHIP 0.01MF		50V
C908	1-126-157-11	ELECT 10MF	20%	16V
C910	1-126-157-11	ELECT 10MF	20%	16V
C926	1-124-638-11	ELECT 22MF	20%	6.3V
C950	1-163-009-11	CERAMIC CHIP 0.001MF	10%	50V
C951	1-163-141-00	CERAMIC CHIP 0.001MF	5%	50V

When indicating parts by reference number, please include the board name.

No.	Part No.	Description	Remark
C952	1-163-035-00	CERAMIC CHIP 0.047MF	50V
C953	1-163-035-00	CERAMIC CHIP 0.047MF	50V
		FILTER	
CF301	1-567-306-11	FILTER, CERAMIC	
		CONNECTOR	
CN003	1-506-473-11	PIN, CONNECTOR 8P	
CN007	1-506-470-11	PIN, CONNECTOR 5P	
CN009	1-506-467-11	PIN, CONNECTOR 2P	
CN010	1-506-470-11	PIN, CONNECTOR 5P	
CN012	1-506-470-11	PIN, CONNECTOR 5P	
CN013	1-506-467-11	PIN, CONNECTOR 2P	
CN014	1-506-471-11	PIN, CONNECTOR 6P	
CN030	1-506-469-11	PIN, CONNECTOR 4P	
CN201	1-506-473-11	PIN, CONNECTOR 8P	
CN301	1-506-467-11	PIN, CONNECTOR 2P	
CN310	*1-506-776-11	CONNECTOR, BOARD TO BOARD 19P	
CN311	*1-566-148-11	CONNECTOR, BOARD TO BOARD 18P	
CN701	1-506-472-11	PIN, CONNECTOR 7P	
CN702	1-506-472-11	PIN, CONNECTOR 7P	
		DIODE	
D001	8-719-100-05	DIODE 1S2837	
D002	8-719-100-05	DIODE 1S2837	
D003	8-719-100-05	DIODE 1S2837	
D004	8-719-100-03	DIODE 1S2835	
D005	8-719-100-03	DIODE 1S2835	
D006	8-719-100-03	DIODE 1S2835	
D008	8-719-100-05	DIODE 1S2837	
D012	8-719-100-05	DIODE 1S2837	
D013	8-719-100-05	DIODE 1S2837	
D101	8-719-801-48	DIODE 1SS193	
D104	8-719-100-03	DIODE 1S2835	
D301	8-719-100-03	DIODE 1S2835	
D303	8-719-100-03	DIODE 1S2835	
D402	8-719-100-05	DIODE 1S2837	
D403	8-719-800-76	DIODE 1SS123	
D405	8-719-100-05	DIODE 1S2837	
D410	8-719-100-05	DIODE 1S2837	
D411	8-719-800-76	DIODE 1SS123	
D601	8-719-100-05	DIODE 1S2837	
D602	8-719-100-05	DIODE 1S2837	
D603	8-719-100-05	DIODE 1S2837	
D950	8-719-100-05	DIODE 1S2837	
		DELAY LINE	
DL001	1-415-342-00	DELAY LINE, 1H	
DL002	1-415-379-21	DELAY LINE, 1H	
		FILTER	
FL101	1-236-371-11	LPF, REC (Y)	

No.	Part No.	Description	Remark
FL102	1-236-370-11	LPF, DEMOD (Y)	
FL201	1-235-496-11	PB C BPF	
FL202	1-415-637-11	DL (LC)	
FL203	1-415-652-11	DC (LC)	
FL401	1-409-397-11	TRAP	
FL801	1-415-647-11	DELAY LINE, LC	
		IC	
IC001	8-759-200-84	IC TC4081BF	
IC002	8-759-200-79	IC TC4049BF	
IC101	8-752-003-00	IC CX20030	
IC102	8-752-031-01	IC CXA1047M	
IC201	8-752-003-10	IC CX20031	
IC302	8-752-914-56	IC CX23054	
IC401	8-759-200-79	IC TA8607F	
IC402	8-759-925-60	IC BA401	
IC801	8-759-941-68	IC BA7131F	
IC802	8-759-941-68	IC BA7131F	
IC803	8-759-941-68	IC BA7131F	
IC804	8-759-710-09	IC NJM2233AM	
IC805	8-759-710-09	IC NJM2233AM	
IC901	8-759-927-52	IC BA7036LS	
		COIL	
L101	1-408-970-21	INDUCTOR 10UH	
L102	1-408-973-21	INDUCTOR 18UH	
L103	1-408-972-21	INDUCTOR 15UH	
L104	1-408-976-21	INDUCTOR 33UH	
L106	1-408-973-21	INDUCTOR 18UH	
L107	1-410-388-21	INDUCTOR CHIP 39UH	
L110	1-410-385-11	INDUCTOR CHIP 22UH	
L111	1-408-966-21	INDUCTOR 4.7UH	
L112	1-408-985-21	INDUCTOR 180UH	
L113	1-408-979-21	INDUCTOR 56UH	
L114	1-408-973-21	INDUCTOR 18UH	
L115	1-410-378-11	INDUCTOR CHIP 5.6UH	
L116	1-408-980-21	INDUCTOR 68UH	
L201	1-408-972-21	INDUCTOR 15UH	
L202	1-408-984-21	INDUCTOR 150UH	
L203	1-408-978-21	INDUCTOR 47UH	
L204	1-410-390-11	INDUCTOR CHIP 56UH	
L205	1-408-960-21	INDUCTOR 1.5UH	
L206	1-408-960-21	INDUCTOR 1.5UH	
L207	1-408-982-11	INDUCTOR 100UH	
L209	1-410-386-11	INDUCTOR CHIP 27UH	
L210	1-410-388-21	INDUCTOR CHIP 39UH	
L301	1-408-982-11	INDUCTOR 100UH	
L302	1-408-983-21	INDUCTOR 120UH	
L303	1-408-948-00	INDUCTOR 220UH	
L304	1-408-981-21	INDUCTOR 82UH	
L305	1-408-968-21	INDUCTOR 6.8UH	
L401	1-408-974-21	INDUCTOR 22UH	
L402	1-410-072-21	INDUCTOR 820UH	

When indicating parts by reference number, please include the board name.

No.	Part No.	Description		Remark
L403	1-408-985-21	INDUCTOR	180UH	
L404	1-408-968-21	INDUCTOR	6.8UH	
L405	1-408-963-11	INDUCTOR	2.7UH	
L406	1-408-968-21	INDUCTOR	6.8UH	
L407	1-408-973-21	INDUCTOR	18UH	
L408	1-408-989-21	INDUCTOR	470UH	
L409	1-408-989-21	INDUCTOR	470UH	
L410	1-408-972-21	INDUCTOR	15UH	
L411	1-408-973-21	INDUCTOR	18UH	
L412	1-408-976-21	INDUCTOR	33UH	
L413	1-408-970-21	INDUCTOR	10UH	
L414	1-408-970-21	INDUCTOR	10UH	
L415	1-408-968-21	INDUCTOR	6.8UH	
L418	1-408-970-21	INDUCTOR	10UH	
L501	1-408-982-11	INDUCTOR	100UH	
L531	1-408-984-21	INDUCTOR	150UH	
L532	1-408-981-21	INDUCTOR	82UH	
L533	1-408-975-21	INDUCTOR	27UH	
L534	1-408-969-21	INDUCTOR	8.2UH	
L601	1-408-982-11	INDUCTOR	100UH	
L701	1-408-982-11	INDUCTOR	100UH	
L801	1-408-982-11	INDUCTOR	100UH	
L901	1-408-970-21	INDUCTOR	10UH	

VARIABLE COIL

LV201	1-408-520-00	COIL, VARIABLE	15UH

TRANSISTOR

Q001	8-729-901-01	TRANSISTOR	DTC144EK
Q002	8-729-901-06	TRANSISTOR	DTA144EK
Q003	8-729-901-01	TRANSISTOR	DTC144EK
Q004	8-729-901-06	TRANSISTOR	DTA144EK
Q005	8-729-900-53	TRANSISTOR	DTC114EK
Q006	8-729-901-04	TRANSISTOR	DTA114EK
Q007	8-729-901-01	TRANSISTOR	DTC144EK
Q008	8-729-901-01	TRANSISTOR	DTC144EK
Q009	8-729-901-06	TRANSISTOR	DTA144EK
Q010	8-729-901-01	TRANSISTOR	DTC144EK
Q011	8-729-201-79	TRANSISTOR	2SD1406
Q012 ⚠	8-729-113-31	TRANSISTOR	2SB733-2
Q013	8-729-901-01	TRANSISTOR	DTC144EK
Q015	8-729-901-06	TRANSISTOR	DTA144EK
Q020	8-729-100-76	TRANSISTOR	2SA812
Q101	8-729-901-06	TRANSISTOR	DTA144EK
Q102	8-729-901-01	TRANSISTOR	DTC144EK
Q103	8-729-901-01	TRANSISTOR	DTC144EK
Q104	8-729-901-04	TRANSISTOR	DTA114EK
Q105	8-729-202-38	TRANSISTOR	2SC3326N
Q106	8-729-202-38	TRANSISTOR	2SC3326N
Q107	8-729-100-76	TRANSISTOR	2SA812
Q108	8-729-901-01	TRANSISTOR	DTC144EK
Q109	8-729-901-01	TRANSISTOR	DTC144EK
Q110	8-729-901-01	TRANSISTOR	DTC144EK
Q111	8-729-901-01	TRANSISTOR	DTC144EK
Q112	8-729-300-55	TRANSISTOR	2SA1122D
Q113	8-729-901-01	TRANSISTOR	DTC144EK
Q114	8-729-901-04	TRANSISTOR	DTA114EK
Q115	8-729-901-01	TRANSISTOR	DTC144EK
Q116	8-729-102-76	TRANSISTOR	2SA812
Q117	8-729-901-01	TRANSISTOR	DTC144EK
Q118	8-729-100-66	TRANSISTOR	2SC1623
Q119	8-729-100-66	TRANSISTOR	2SC1623
Q120	8-729-901-04	TRANSISTOR	DTA114EK
Q121	8-729-100-66	TRANSISTOR	2SC1623
Q122	8-729-100-76	TRANSISTOR	2SA812
Q123	8-729-100-66	TRANSISTOR	2SC1623
Q124	8-729-100-66	TRANSISTOR	2SC1623
Q125	8-729-100-66	TRANSISTOR	2SC1623
Q126	8-729-100-66	TRANSISTOR	2SC1623
Q127	8-729-100-66	TRANSISTOR	2SC1623
Q128	8-729-100-66	TRANSISTOR	2SC1623
Q129	8-729-100-66	TRANSISTOR	2SC1623
Q130	8-729-100-66	TRANSISTOR	2SC1623
Q131	8-729-901-01	TRANSISTOR	DTC144EK
Q133	8-729-901-06	TRANSISTOR	DTA144EK
Q137	8-729-901-01	TRANSISTOR	DTC144EK
Q151	8-729-100-66	TRANSISTOR	2SC1623
Q152	8-729-100-66	TRANSISTOR	2SC1623
Q201	8-729-901-01	TRANSISTOR	DTC144EK
Q202	8-729-901-01	TRANSISTOR	DTC144EK
Q203	8-729-901-00	TRANSISTOR	DTC124EK
Q204	8-729-901-01	TRANSISTOR	DTC144EK
Q205	8-729-901-06	TRANSISTOR	DTA144EK
Q206	8-729-100-76	TRANSISTOR	2SC1623
Q207	8-729-100-66	TRANSISTOR	2SC1623
Q208	8-729-100-66	TRANSISTOR	2SC1623
Q209	8-729-901-00	TRANSISTOR	DTC124EK
Q210	8-729-901-00	TRANSISTOR	DTC124EK
Q211	8-729-100-76	TRANSISTOR	2SA812
Q212	8-729-100-76	TRANSISTOR	2SA812
Q213	8-729-901-01	TRANSISTOR	DTC144EK
Q214	8-729-900-89	TRANSISTOR	DTC144ES
Q301	8-729-100-66	TRANSISTOR	2SC1623
Q302	8-729-100-66	TRANSISTOR	2SC1623
Q303	8-729-100-66	TRANSISTOR	2SC1623
Q304	8-729-901-01	TRANSISTOR	DTC144EK
Q305	8-729-100-66	TRANSISTOR	2SC1623
Q306	8-729-100-66	TRANSISTOR	2SC1623
Q307	8-729-901-01	TRANSISTOR	DTC144EK
Q308	8-729-901-01	TRANSISTOR	DTC144EK
Q401	8-729-100-66	TRANSISTOR	2SC1623
Q402	8-729-100-66	TRANSISTOR	2SC1623
Q403	8-729-901-01	TRANSISTOR	DTC144EK
Q404	8-729-901-04	TRANSISTOR	DTA114EK
Q405	8-729-901-01	TRANSISTOR	DTC144EK
Q406	8-729-901-06	TRANSISTOR	DTA144EK

The components identified by mark ⚠ or dotted line with mark ⚠ are critical for safety.
Replace only with part number specified.

Les composants identifiés par une marque ⚠ sont critiques pour la sécurité.
Ne les remplacer que par une pièce portant le numéro spécifé.

When indicating parts by reference number, please include the board name.

No.	Part No.	Description	Remark
Q408	8-729-100-66	TRANSISTOR 2SC1623	
Q409	8-729-100-66	TRANSISTOR 2SC1623	
Q411	8-729-100-66	TRANSISTOR 2SC1623	
Q412	8-729-100-66	TRANSISTOR 2SC1623	
Q413	8-729-100-66	TRANSISTOR 2SC1623	
Q414	8-729-100-66	TRANSISTOR 2SC1623	
Q415	8-729-100-66	TRANSISTOR 2SC1623	
Q416	8-729-901-04	TRANSISTOR DTA114EK	
Q417	8-729-100-66	TRANSISTOR 2SC1623	
Q418	8-729-100-66	TRANSISTOR 2SC1623	
Q419	8-729-100-66	TRANSISTOR 2SC1623	
Q420	8-729-100-76	TRANSISTOR 2SA812	
Q421	8-729-100-66	TRANSISTOR 2SC1623	
Q422	8-729-100-76	TRANSISTOR 2SA812	
Q423	8-729-100-76	TRANSISTOR 2SA812	
Q424	8-729-100-66	TRANSISTOR 2SC1623	
Q425	8-729-100-66	TRANSISTOR 2SC1623	
Q426	8-729-100-76	TRANSISTOR 2SA812	
Q429	8-729-100-66	TRANSISTOR 2SC1623	
Q430	8-729-901-01	TRANSISTOR DTC144EK	
Q431	8-729-901-01	TRANSISTOR DTC144EK	
Q432	8-729-901-01	TRANSISTOR DTC144EK	
Q433	8-729-202-38	TRANSISTOR 2SC3326N	
Q435	8-729-901-01	TRANSISTOR DTC144EK	
Q436	8-729-901-01	TRANSISTOR DTC144EK	
Q437	8-729-901-01	TRANSISTOR DTC144EK	
Q501	8-729-100-66	TRANSISTOR 2SC1623	
Q502	8-729-100-66	TRANSISTOR 2SC1623	
Q503	8-729-100-66	TRANSISTOR 2SC1623	
Q504	8-729-901-06	TRANSISTOR DTA144EK	
Q505	8-729-312-22	TRANSISTOR 2SA1122D	
Q506	8-729-312-22	TRANSISTOR 2SA1122D	
Q531	8-729-100-66	TRANSISTOR 2SC1623	
Q532	8-729-901-01	TRANSISTOR DTC144EK	
Q533	8-729-901-01	TRANSISTOR DTC144EK	
Q534	8-729-122-63	TRANSISTOR 2SA1226	
Q535	8-729-100-66	TRANSISTOR 2SC1623	
Q536	8-729-100-66	TRANSISTOR 2SC1623	
Q537	8-729-100-66	TRANSISTOR 2SC1623	
Q538	8-729-100-66	TRANSISTOR 2SC1623	
Q539	8-729-100-66	TRANSISTOR 2SC1623	
Q540	8-729-102-08	TRANSISTOR 2SC2223-F14	
Q541	8-729-102-08	TRANSISTOR 2SC2223-F14	
Q542	8-729-901-01	TRANSISTOR DTC144EK	
Q601	8-729-100-76	TRANSISTOR 2SA812	
Q602	8-729-100-66	TRANSISTOR 2SC1623	
Q603	8-729-100-76	TRANSISTOR 2SA812	
Q604	8-729-100-66	TRANSISTOR 2SC1623	
Q605	8-729-901-06	TRANSISTOR DTA144EK	
Q606	8-729-901-01	TRANSISTOR DTC144EK	
Q607	8-729-901-01	TRANSISTOR DTC144EK	
Q608	8-729-312-22	TRANSISTOR 2SA1122D	
Q609	8-729-312-22	TRANSISTOR 2SA1122D	

No.	Part No.	Description	Remark
Q611	8-729-100-66	TRANSISTOR 2SC1623	
Q612	8-729-100-66	TRANSISTOR 2SC1623	
Q613	8-729-100-76	TRANSISTOR 2SA812	
Q614	8-729-901-01	TRANSISTOR DTC144EK	
Q615	8-729-901-01	TRANSISTOR DTC144EK	
Q616	8-729-901-06	TRANSISTOR DTA144EK	
Q619	8-729-901-01	TRANSISTOR DTC144EK	
Q701	8-729-100-76	TRANSISTOR 2SA812	
Q702	8-729-100-76	TRANSISTOR 2SA812	
Q703	8-729-100-76	TRANSISTOR 2SA812	
Q704	8-729-100-76	TRANSISTOR 2SA812	
Q801	8-729-100-66	TRANSISTOR 2SC1623	
Q802	8-729-100-66	TRANSISTOR 2SC1623	
Q803	8-729-100-66	TRANSISTOR 2SC1623	
Q804	8-729-100-66	TRANSISTOR 2SC1623	
Q805	8-729-100-76	TRANSISTOR 2SA812	
Q806	8-729-100-66	TRANSISTOR 2SC1623	
Q807	8-729-100-66	TRANSISTOR 2SC1623	
Q808	8-729-100-66	TRANSISTOR 2SC1623	
Q809	8-729-901-01	TRANSISTOR DTC144EK	
Q810	8-729-100-66	TRANSISTOR 2SC1623	
Q811	8-729-100-66	TRANSISTOR 2SC1623	
Q812	8-729-100-66	TRANSISTOR 2SC1623	
Q813	8-729-100-76	TRANSISTOR 2SA812	
Q901	8-729-901-04	TRANSISTOR DTA114EK	
Q902	8-729-901-04	TRANSISTOR DTA114EK	
Q950	8-729-903-10	TRANSISTOR FMW1	
Q951	8-729-907-46	TRANSISTOR IMZ1	
Q952	8-729-100-76	TRANSISTOR 2SA812	
Q953	8-729-901-01	TRANSISTOR DTC144EK	
Q954	8-729-100-66	TRANSISTOR 2SC1623	

RESISTOR

R001	1-216-089-00	METAL GLAZE	47K	5%	1/10W
R002	1-216-089-00	METAL GLAZE	47K	5%	1/10W
R003	1-216-097-00	METAL GLAZE	100K	5%	1/10W
R004	1-216-089-00	METAL GLAZE	47K	5%	1/10W
R005	1-216-049-00	METAL GLAZE	1K	5%	1/10W
R006	1-216-049-00	METAL GLAZE	1K	5%	1/10W
R007	1-216-041-00	METAL GLAZE	470	5%	1/10W
R008	1-216-065-00	METAL GLAZE	4.7K	5%	1/10W
R009	1-216-295-00	METAL GLAZE	0	5%	1/10W
R013	1-216-641-11	METAL CHIP	390	0.50%	1/10W
R014	1-216-653-11	METAL CHIP	1.2K	0.50%	1/10W
R015	1-216-089-00	METAL GLAZE	47K	5%	1/10W
R016	1-216-055-00	METAL GLAZE	1.8K	5%	1/10W
R017	1-216-025-00	METAL GLAZE	100	5%	1/10W
R018	1-216-073-00	METAL GLAZE	10K	5%	1/10W
R019	1-216-065-00	METAL GLAZE	4.7K	5%	1/10W
R020	1-216-057-00	METAL GLAZE	2.2K	5%	1/10W
R021	1-216-037-00	METAL GLAZE	330	5%	1/10W
R022	1-216-037-00	METAL GLAZE	330	5%	1/10W
R024	1-216-073-00	METAL GLAZE	10K	5%	1/10W

When indicating parts by reference number, please include the board name.

No.	Part No.	Description				Remark
R025	1-216-073-00	METAL GLAZE	10K	5%	1/10W	
R027	1-216-295-00	METAL GLAZE	0	5%	1/10W	
R029	1-216-295-00	METAL GLAZE	0	5%	1/10W	
R030	1-216-073-00	METAL GLAZE	10K	5%	1/10W	
R050	1-216-295-00	METAL GLAZE	0	5%	1/10W	
R060	1-216-049-00	METAL GLAZE	1K	5%	1/10W	
R087	1-216-073-00	METAL GLAZE	10K	5%	1/10W	
R089	1-216-073-00	METAL GLAZE	10K	5%	1/10W	
R094	1-216-037-00	METAL GLAZE	330	5%	1/10W	
R096	1-216-032-00	METAL GLAZE	200	5%	1/10W	
R097	1-216-043-00	METAL GLAZE	560	5%	1/10W	
R098	1-216-073-00	METAL GLAZE	10K	5%	1/10W	
R099	1-216-057-00	METAL GLAZE	2.2K	5%	1/10W	
R101	1-216-113-00	METAL GLAZE	470K	5%	1/10W	
R102	1-216-099-00	METAL GLAZE	120K	5%	1/10W	
R103	1-216-075-00	METAL GLAZE	12K	5%	1/10W	
R104	1-216-081-00	METAL GLAZE	22K	5%	1/10W	
R105	1-216-077-00	METAL GLAZE	15K	5%	1/10W	
R106	1-216-085-00	METAL GLAZE	33K	5%	1/10W	
R107	1-216-109-00	METAL GLAZE	330K	5%	1/10W	
R108	1-216-049-00	METAL GLAZE	1K	5%	1/10W	
R109	1-216-081-00	METAL GLAZE	22K	5%	1/10W	
R110	1-216-081-00	METAL GLAZE	22K	5%	1/10W	
R111	1-216-295-00	METAL GLAZE	0	5%	1/10W	
R112	1-216-049-00	METAL GLAZE	1K	5%	1/10W	
R113	1-216-089-00	METAL GLAZE	47K	5%	1/10W	
R114	1-216-091-00	METAL GLAZE	56K	5%	1/10W	
R115	1-216-083-00	METAL GLAZE	27K	5%	1/10W	
R116	1-216-093-00	METAL GLAZE	68K	5%	1/10W	
R117	1-216-667-11	METAL CHIP	4.7K	0.50%	1/10W	
R118	1-216-643-11	METAL CHIP	470	0.50%	1/10W	
R119	1-216-641-11	METAL CHIP	390	0.50%	1/10W	
R120	1-216-653-11	METAL CHIP	1.2K	0.50%	1/10W	
R121	1-216-089-00	METAL GLAZE	47K	5%	1/10W	
R122	1-216-663-11	METAL CHIP	3.3K	0.50%	1/10W	
R123	1-216-671-11	METAL CHIP	6.8K	0.50%	1/10W	
R124	1-216-679-11	METAL CHIP	15K	0.50%	1/10W	
R125	1-216-065-00	METAL GLAZE	4.7K	5%	1/10W	
R126	1-216-075-00	METAL GLAZE	12K	5%	1/10W	
R127	1-216-071-00	METAL GLAZE	8.2K	5%	1/10W	
R128	1-216-666-11	METAL CHIP	4.3K	0.50%	1/10W	
R129	1-216-666-11	METAL CHIP	4.3K	0.50%	1/10W	
R130	1-216-103-00	METAL GLAZE	180K	5%	1/10W	
R131	1-216-663-11	METAL CHIP	3.3K	0.50%	1/10W	
R132	1-216-667-11	METAL CHIP	4.7K	0.50%	1/10W	
R133	1-216-101-00	METAL GLAZE	150K	5%	1/10W	
R134	1-216-645-11	METAL CHIP	560	0.50%	1/10W	
R135	1-216-032-00	METAL GLAZE	200	5%	1/10W	
R136	1-216-097-00	METAL GLAZE	100K	5%	1/10W	
R137	1-216-073-00	METAL GLAZE	10K	5%	1/10W	
R138	1-216-653-11	METAL CHIP	1.2K	0.50%	1/10W	
R139	1-216-641-11	METAL CHIP	390	0.50%	1/10W	
R140	1-216-049-00	METAL GLAZE	1K	5%	1/10W	

No.	Part No.	Description				Remark
R141	1-216-083-00	METAL GLAZE	27K	5%	1/10W	
R142	1-216-081-00	METAL GLAZE	22K	5%	1/10W	
R143	1-216-049-00	METAL GLAZE	1K	5%	1/10W	
R144	1-216-081-00	METAL GLAZE	22K	5%	1/10W	
R145	1-216-748-11	METAL GLAZE	39K	5%	1/10W	
R146	1-216-748-11	METAL GLAZE	39K	5%	1/10W	
R148	1-216-044-00	METAL GLAZE	620	5%	1/10W	
R149	1-216-041-00	METAL GLAZE	470	5%	1/10W	
R151	1-216-049-00	METAL GLAZE	1K	5%	1/10W	
R153	1-216-057-00	METAL GLAZE	2.2K	5%	1/10W	
R154	1-216-081-00	METAL GLAZE	22K	5%	1/10W	
R155	1-216-081-00	METAL GLAZE	22K	5%	1/10W	
R156	1-216-101-00	METAL GLAZE	150K	5%	1/10W	
R157	1-216-057-00	METAL GLAZE	2.2K	5%	1/10W	
R158	1-216-041-00	METAL GLAZE	470	5%	1/10W	
R159	1-216-045-00	METAL GLAZE	680	5%	1/10W	
R160	1-216-040-00	METAL GLAZE	430	5%	1/10W	
R162	1-216-043-00	METAL GLAZE	560	5%	1/10W	
R163	1-216-057-00	METAL GLAZE	2.2K	5%	1/10W	
R164	1-216-073-00	METAL GLAZE	10K	5%	1/10W	
R165	1-216-073-00	METAL GLAZE	10K	5%	1/10W	
R166	1-216-083-00	METAL GLAZE	27K	5%	1/10W	
R167	1-216-081-00	METAL GLAZE	22K	5%	1/10W	
R168	1-216-043-00	METAL GLAZE	560	5%	1/10W	
R169	1-216-021-00	METAL GLAZE	68	5%	1/10W	
R170	1-216-045-00	METAL GLAZE	680	5%	1/10W	
R171	1-216-055-00	METAL GLAZE	1.8K	5%	1/10W	
R172	1-216-049-00	METAL GLAZE	1K	5%	1/10W	
R173	1-216-049-00	METAL GLAZE	1K	5%	1/10W	
R174	1-216-057-00	METAL GLAZE	2.2K	5%	1/10W	
R175	1-216-083-00	METAL GLAZE	27K	5%	1/10W	
R176	1-216-059-00	METAL GLAZE	2.7K	5%	1/10W	
R177	1-216-049-00	METAL GLAZE	1K	5%	1/10W	
R178	1-216-033-00	METAL GLAZE	220	5%	1/10W	
R179	1-216-034-00	METAL GLAZE	240	5%	1/10W	
R180	1-216-057-00	METAL GLAZE	2.2K	5%	1/10W	
R181	1-216-043-00	METAL GLAZE	560	5%	1/10W	
R182	1-216-057-00	METAL GLAZE	2.2K	5%	1/10W	
R183	1-216-083-00	METAL GLAZE	27K	5%	1/10W	
R184	1-216-081-00	METAL GLAZE	22K	5%	1/10W	
R185	1-216-053-00	METAL GLAZE	1.5K	5%	1/10W	
R186	1-216-043-00	METAL GLAZE	560	5%	1/10W	
R187	1-216-031-00	METAL GLAZE	180	5%	1/10W	
R188	1-216-033-00	METAL GLAZE	220	5%	1/10W	
R189	1-216-081-00	METAL GLAZE	22K	5%	1/10W	
R190	1-216-039-00	METAL GLAZE	390	5%	1/10W	
R191	1-216-075-00	METAL GLAZE	12K	5%	1/10W	
R192	1-216-081-00	METAL GLAZE	22K	5%	1/10W	
R193	1-216-057-00	METAL GLAZE	2.2K	5%	1/10W	
R194	1-216-043-00	METAL GLAZE	560	5%	1/10W	
R195	1-216-295-00	METAL GLAZE	0	5%	1/10W	
R196	1-216-295-00	METAL GLAZE	0	5%	1/10W	
R197	1-216-033-00	METAL GLAZE	220	5%	1/10W	

When indicating parts by reference number, please include the board name.

No.	Part No.	Description				Remark
R198	1-216-027-00	METAL GLAZE	120	5%	1/10W	
R199	1-216-073-00	METAL GLAZE	10K	5%	1/10W	
R201	1-216-033-00	METAL GLAZE	220	5%	1/10W	
R202	1-216-037-00	METAL GLAZE	330	5%	1/10W	
R203	1-216-043-00	METAL GLAZE	560	5%	1/10W	
R204	1-216-081-00	METAL GLAZE	22K	5%	1/10W	
R205	1-216-081-00	METAL GLAZE	22K	5%	1/10W	
R206	1-216-049-00	METAL GLAZE	1K	5%	1/10W	
R207	1-216-063-00	METAL GLAZE	3.9K	5%	1/10W	
R208	1-216-049-00	METAL GLAZE	1K	5%	1/10W	
R209	1-216-049-00	METAL GLAZE	1K	5%	1/10W	
R210	1-216-035-00	METAL GLAZE	270	5%	1/10W	
R211	1-249-431-11	CARBON	15K	5%	1/4W	
R213	1-216-295-00	METAL GLAZE	0	5%	1/10W	
R214	1-216-057-00	METAL GLAZE	2.2K	5%	1/10W	
R216	1-216-049-00	METAL GLAZE	1K	5%	1/10W	
R217	1-216-295-00	METAL GLAZE	0	5%	1/10W	
R218	1-216-065-00	METAL GLAZE	4.7K	5%	1/10W	
R219	1-216-081-00	METAL GLAZE	22K	5%	1/10W	
R220	1-216-045-00	METAL GLAZE	680	5%	1/10W	
R221	1-216-043-00	METAL GLAZE	560	5%	1/10W	
R222	1-216-065-00	METAL GLAZE	4.7K	5%	1/10W	
R223	1-216-097-00	METAL GLAZE	100K	5%	1/10W	
R224	1-216-075-00	METAL GLAZE	12K	5%	1/10W	
R225	1-216-057-00	METAL GLAZE	2.2K	5%	1/10W	
R226	1-216-039-00	METAL GLAZE	390	5%	1/10W	
R227	1-216-035-00	METAL GLAZE	270	5%	1/10W	
R228	1-216-748-11	METAL GLAZE	39K	5%	1/10W	
R229	1-216-073-00	METAL GLAZE	10K	5%	1/10W	
R230	1-216-117-00	METAL GLAZE	680K	5%	1/10W	
R231	1-216-075-00	METAL GLAZE	12K	5%	1/10W	
R232	1-216-081-00	METAL GLAZE	22K	5%	1/10W	
R233	1-216-081-00	METAL GLAZE	22K	5%	1/10W	
R234	1-216-081-00	METAL GLAZE	22K	5%	1/10W	
R235	1-216-081-00	METAL GLAZE	22K	5%	1/10W	
R236	1-216-029-00	METAL GLAZE	150	5%	1/10W	
R237	1-216-027-00	METAL GLAZE	120	5%	1/10W	
R238	1-216-015-00	METAL GLAZE	39	5%	1/10W	
R239	1-216-083-00	METAL GLAZE	27K	5%	1/10W	
R240	1-216-049-00	METAL GLAZE	1K	5%	1/10W	
R241	1-216-065-00	METAL GLAZE	4.7K	5%	1/10W	
R244	1-216-059-00	METAL GLAZE	2.7K	5%	1/10W	
R245	1-216-051-00	METAL GLAZE	1.2K	5%	1/10W	
R246	1-216-121-00	METAL GLAZE	1M	5%	1/10W	
R247	1-216-089-00	METAL GLAZE	47K	5%	1/10W	
R248	1-216-067-00	METAL GLAZE	5.6K	5%	1/10W	
R249	1-216-049-00	METAL GLAZE	1K	5%	1/10W	
R250	1-216-049-00	METAL GLAZE	1K	5%	1/10W	
R251	1-216-041-00	METAL GLAZE	470	5%	1/10W	
R252	1-216-031-00	METAL GLAZE	180	5%	1/10W	
R253	1-216-041-00	METAL GLAZE	470	5%	1/10W	
R254	1-216-041-00	METAL GLAZE	470	5%	1/10W	
R255	1-216-073-00	METAL GLAZE	10K	5%	1/10W	

No.	Part No.	Description				Remark
R256	1-216-081-00	METAL GLAZE	22K	5%	1/10W	
R257	1-216-049-00	METAL GLAZE	1K	5%	1/10W	
R258	1-216-073-00	METAL GLAZE	10K	5%	1/10W	
R259	1-216-081-00	METAL GLAZE	22K	5%	1/10W	
R260	1-216-043-00	METAL GLAZE	560	5%	1/10W	
R261	1-216-041-00	METAL GLAZE	470	5%	1/10W	
R262	1-216-043-00	METAL GLAZE	560	5%	1/10W	
R263	1-216-041-00	METAL GLAZE	470	5%	1/10W	
R264	1-216-049-00	METAL GLAZE	1K	5%	1/10W	
R265	1-216-049-00	METAL GLAZE	1K	5%	1/10W	
R266	1-216-065-00	METAL GLAZE	4.7K	5%	1/10W	
R267	1-216-057-00	METAL GLAZE	2.2K	5%	1/10W	
R268	1-216-057-00	METAL GLAZE	2.2K	5%	1/10W	
R301	1-216-049-00	METAL GLAZE	1K	5%	1/10W	
R302	1-216-049-00	METAL GLAZE	1K	5%	1/10W	
R303	1-216-105-00	METAL GLAZE	220K	5%	1/10W	
R304	1-216-039-00	METAL GLAZE	390	5%	1/10W	
R305	1-216-051-00	METAL GLAZE	1.2K	5%	1/10W	
R306	1-216-081-00	METAL GLAZE	22K	5%	1/10W	
R307	1-216-049-00	METAL GLAZE	1K	5%	1/10W	
R308	1-216-051-00	METAL GLAZE	1.2K	5%	1/10W	
R309	1-216-057-00	METAL GLAZE	2.2K	5%	1/10W	
R310	1-216-063-00	METAL GLAZE	3.9K	5%	1/10W	
R311	1-216-065-00	METAL GLAZE	4.7K	5%	1/10W	
R312	1-216-067-00	METAL GLAZE	5.6K	5%	1/10W	
R313	1-216-049-00	METAL GLAZE	1K	5%	1/10W	
R314	1-216-085-00	METAL GLAZE	33K	5%	1/10W	
R315	1-216-085-00	METAL GLAZE	33K	5%	1/10W	
R316	1-216-057-00	METAL GLAZE	2.2K	5%	1/10W	
R317	1-216-043-00	METAL GLAZE	560	5%	1/10W	
R318	1-216-065-00	METAL GLAZE	4.7K	5%	1/10W	
R319	1-216-073-00	METAL GLAZE	10K	5%	1/10W	
R320	1-216-089-00	METAL GLAZE	47K	5%	1/10W	
R321	1-216-085-00	METAL GLAZE	33K	5%	1/10W	
R322	1-216-043-00	METAL GLAZE	560	5%	1/10W	
R323	1-216-043-00	METAL GLAZE	560	5%	1/10W	
R324	1-216-073-00	METAL GLAZE	10K	5%	1/10W	
R325	1-216-077-00	METAL GLAZE	15K	5%	1/10W	
R326	1-216-041-00	METAL GLAZE	470	5%	1/10W	
R327	1-216-036-00	METAL GLAZE	300	5%	1/10W	
R328	1-216-041-00	METAL GLAZE	470	5%	1/10W	
R329	1-216-041-00	METAL GLAZE	470	5%	1/10W	
R330	1-216-073-00	METAL GLAZE	10K	5%	1/10W	
R331	1-216-077-00	METAL GLAZE	15K	5%	1/10W	
R332	1-216-041-00	METAL GLAZE	470	5%	1/10W	
R333	1-216-073-00	METAL GLAZE	10K	5%	1/10W	
R401	1-216-073-00	METAL GLAZE	10K	5%	1/10W	
R402	1-216-029-00	METAL GLAZE	150	5%	1/10W	
R403	1-216-073-00	METAL GLAZE	10K	5%	1/10W	
R404	1-216-295-00	METAL GLAZE	0	5%	1/10W	
R405	1-216-041-00	METAL GLAZE	470	5%	1/10W	
R406	1-216-035-00	METAL GLAZE	270	5%	1/10W	
R407	1-216-043-00	METAL GLAZE	560	5%	1/10W	

When indicating parts by reference number, please include the board name.

No.	Part No.	Description				Remark
R408	1-216-081-00	METAL GLAZE	22K	5%	1/10W	
R409	1-216-081-00	METAL GLAZE	22K	5%	1/10W	
R410	1-216-041-00	METAL GLAZE	470	5%	1/10W	
R411	1-216-045-00	METAL GLAZE	680	5%	1/10W	
R412	1-216-041-00	METAL GLAZE	470	5%	1/10W	
R414	1-216-043-00	METAL GLAZE	560	5%	1/10W	
R415	1-216-039-00	METAL GLAZE	390	5%	1/10W	
R416	1-216-073-00	METAL GLAZE	10K	5%	1/10W	
R417	1-216-049-00	METAL GLAZE	1K	5%	1/10W	
R418	1-216-057-00	METAL GLAZE	2.2K	5%	1/10W	
R419	1-216-073-00	METAL GLAZE	10K	5%	1/10W	
R420	1-216-033-00	METAL GLAZE	220	5%	1/10W	
R421	1-216-049-00	METAL GLAZE	1K	5%	1/10W	
R422	1-216-045-00	METAL GLAZE	680	5%	1/10W	
R423	1-216-033-00	METAL GLAZE	220	5%	1/10W	
R424	1-216-295-00	METAL GLAZE	0	5%	1/10W	
R425	1-216-075-00	METAL GLAZE	12K	5%	1/10W	
R426	1-216-748-11	METAL GLAZE	39K	5%	1/10W	
R427	1-216-041-00	METAL GLAZE	470	5%	1/10W	
R428	1-216-037-00	METAL GLAZE	330	5%	1/10W	
R429	1-216-035-00	METAL GLAZE	270	5%	1/10W	
R431	1-216-081-00	METAL GLAZE	22K	5%	1/10W	
R432	1-216-081-00	METAL GLAZE	22K	5%	1/10W	
R433	1-216-049-00	METAL GLAZE	1K	5%	1/10W	
R434	1-216-049-00	METAL GLAZE	1K	5%	1/10W	
R435	1-216-073-00	METAL GLAZE	10K	5%	1/10W	
R436	1-216-049-00	METAL GLAZE	1K	5%	1/10W	
R437	1-216-073-00	METAL GLAZE	10K	5%	1/10W	
R438	1-216-069-00	METAL GLAZE	6.8K	5%	1/10W	
R439	1-216-083-00	METAL GLAZE	27K	5%	1/10W	
R440	1-216-295-00	METAL GLAZE	0	5%	1/10W	
R441	1-216-081-00	METAL GLAZE	22K	5%	1/10W	
R442	1-216-047-00	METAL GLAZE	820	5%	1/10W	
R443	1-216-029-00	METAL GLAZE	150	5%	1/10W	
R444	1-216-051-00	METAL GLAZE	1.2K	5%	1/10W	
R445	1-216-081-00	METAL GLAZE	22K	5%	1/10W	
R446	1-216-081-00	METAL GLAZE	22K	5%	1/10W	
R447	1-216-045-00	METAL GLAZE	680	5%	1/10W	
R448	1-216-052-00	METAL GLAZE	1.3K	5%	1/10W	
R449	1-216-085-00	METAL GLAZE	33K	5%	1/10W	
R450	1-216-079-00	METAL GLAZE	18K	5%	1/10W	
R451	1-216-085-00	METAL GLAZE	33K	5%	1/10W	
R452	1-216-069-00	METAL GLAZE	6.8K	5%	1/10W	
R453	1-216-073-00	METAL GLAZE	10K	5%	1/10W	
R454	1-216-073-00	METAL GLAZE	10K	5%	1/10W	
R455	1-216-085-00	METAL GLAZE	33K	5%	1/10W	
R456	1-216-081-00	METAL GLAZE	22K	5%	1/10W	
R457	1-216-043-00	METAL GLAZE	560	5%	1/10W	
R458	1-216-047-00	METAL GLAZE	820	5%	1/10W	
R459	1-216-049-00	METAL GLAZE	1K	5%	1/10W	
R460	1-216-077-00	METAL GLAZE	15K	5%	1/10W	
R461	1-216-051-00	METAL GLAZE	1.2K	5%	1/10W	
R462	1-216-051-00	METAL GLAZE	1.2K	5%	1/10W	

No.	Part No.	Description				Remark
R463	1-216-081-00	METAL GLAZE	22K	5%	1/10W	
R464	1-216-073-00	METAL GLAZE	10K	5%	1/10W	
R465	1-216-073-00	METAL GLAZE	10K	5%	1/10W	
R468	1-216-089-00	METAL GLAZE	47K	5%	1/10W	
R469	1-216-073-00	METAL GLAZE	10K	5%	1/10W	
R472	1-216-043-00	METAL GLAZE	560	5%	1/10W	
R476	1-216-089-00	METAL GLAZE	47K	5%	1/10W	
R478	1-216-085-00	METAL GLAZE	33K	5%	1/10W	
R479	1-216-073-00	METAL GLAZE	10K	5%	1/10W	
R486	1-216-041-00	METAL GLAZE	470	5%	1/10W	
R487	1-216-041-00	METAL GLAZE	470	5%	1/10W	
R490	1-216-089-00	METAL GLAZE	47K	5%	1/10W	
R501	1-216-043-00	METAL GLAZE	560	5%	1/10W	
R502	1-216-295-00	METAL GLAZE	0	5%	1/10W	
R503	1-216-065-00	METAL GLAZE	4.7K	5%	1/10W	
R504	1-216-035-00	METAL GLAZE	270	5%	1/10W	
R505	1-216-033-00	METAL GLAZE	220	5%	1/10W	
R507	1-216-053-00	METAL GLAZE	1.5K	5%	1/10W	
R508	1-216-057-00	METAL GLAZE	2.2K	5%	1/10W	
R510	1-216-069-00	METAL GLAZE	6.8K	5%	1/10W	
R511	1-216-049-00	METAL GLAZE	1K	5%	1/10W	
R512	1-216-041-00	METAL GLAZE	470	5%	1/10W	
R513	1-216-069-00	METAL GLAZE	6.8K	5%	1/10W	
R514	1-216-041-00	METAL GLAZE	470	5%	1/10W	
R515	1-216-047-00	METAL GLAZE	820	5%	1/10W	
R517	1-216-089-00	METAL GLAZE	47K	5%	1/10W	
R518	1-216-089-00	METAL GLAZE	47K	5%	1/10W	
R519	1-216-089-00	METAL GLAZE	47K	5%	1/10W	
R520	1-216-089-00	METAL GLAZE	47K	5%	1/10W	
R531	1-216-049-00	METAL GLAZE	1K	5%	1/10W	
R532	1-216-043-00	METAL GLAZE	560	5%	1/10W	
R533	1-216-035-00	METAL GLAZE	270	5%	1/10W	
R534	1-216-059-00	METAL GLAZE	2.7K	5%	1/10W	
R535	1-216-043-00	METAL GLAZE	560	5%	1/10W	
R536	1-216-079-00	METAL GLAZE	18K	5%	1/10W	
R537	1-216-049-00	METAL GLAZE	1K	5%	1/10W	
R538	1-216-073-00	METAL GLAZE	10K	5%	1/10W	
R540	1-216-073-00	METAL GLAZE	10K	5%	1/10W	
R542	1-216-049-00	METAL GLAZE	1K	5%	1/10W	
R543	1-216-081-00	METAL GLAZE	22K	5%	1/10W	
R544	1-216-081-00	METAL GLAZE	22K	5%	1/10W	
R545	1-216-041-00	METAL GLAZE	470	5%	1/10W	
R546	1-216-049-00	METAL GLAZE	1K	5%	1/10W	
R547	1-216-041-00	METAL GLAZE	470	5%	1/10W	
R548	1-216-041-00	METAL GLAZE	470	5%	1/10W	
R549	1-216-295-00	METAL GLAZE	0	5%	1/10W	
R550	1-216-041-00	METAL GLAZE	470	5%	1/10W	
R551	1-216-041-00	METAL GLAZE	470	5%	1/10W	
R552	1-216-065-00	METAL GLAZE	4.7K	5%	1/10W	
R553	1-216-083-00	METAL GLAZE	27K	5%	1/10W	
R554	1-216-081-00	METAL GLAZE	22K	5%	1/10W	
R555	1-216-046-00	METAL GLAZE	750	5%	1/10W	
R556	1-216-073-00	METAL GLAZE	10K	5%	1/10W	

When indicating parts by reference number, please include the board name.

No.	Part No.	Description				Remark
R558	1-216-073-00	METAL GLAZE	10K	5%	1/10W	
R560	1-216-059-00	METAL GLAZE	2.7K	5%	1/10W	
R601	1-216-057-00	METAL GLAZE	2.2K	5%	1/10W	
R602	1-216-065-00	METAL GLAZE	4.7K	5%	1/10W	
R603	1-216-748-11	METAL GLAZE	39K	5%	1/10W	
R604	1-216-075-00	METAL GLAZE	12K	5%	1/10W	
R605	1-216-081-00	METAL GLAZE	22K	5%	1/10W	
R606	1-216-097-00	METAL GLAZE	100K	5%	1/10W	
R607	1-216-055-00	METAL GLAZE	1.8K	5%	1/10W	
R608	1-216-059-00	METAL GLAZE	2.7K	5%	1/10W	
R609	1-216-059-00	METAL GLAZE	2.7K	5%	1/10W	
R610	1-216-111-00	METAL GLAZE	390K	5%	1/10W	
R611	1-216-061-00	METAL GLAZE	3.3K	5%	1/10W	
R612	1-216-041-00	METAL GLAZE	470	5%	1/10W	
R613	1-216-069-00	METAL GLAZE	6.8K	5%	1/10W	
R614	1-216-073-00	METAL GLAZE	10K	5%	1/10W	
R615	1-216-073-00	METAL GLAZE	10K	5%	1/10W	
R616	1-216-077-00	METAL GLAZE	15K	5%	1/10W	
R617	1-216-041-00	METAL GLAZE	470	5%	1/10W	
R618	1-216-081-00	METAL GLAZE	22K	5%	1/10W	
R619	1-216-057-00	METAL GLAZE	2.2K	5%	1/10W	
R620	1-216-041-00	METAL GLAZE	470	5%	1/10W	
R622	1-216-083-00	METAL GLAZE	27K	5%	1/10W	
R623	1-216-047-00	METAL GLAZE	820	5%	1/10W	
R624	1-216-081-00	METAL GLAZE	22K	5%	1/10W	
R625	1-216-039-00	METAL GLAZE	390	5%	1/10W	
R626	1-216-049-00	METAL GLAZE	1K	5%	1/10W	
R627	1-216-073-00	METAL GLAZE	10K	5%	1/10W	
R628	1-216-073-00	METAL GLAZE	10K	5%	1/10W	
R629	1-216-033-00	METAL GLAZE	220	5%	1/10W	
R640	1-216-089-00	METAL GLAZE	47K	5%	1/10W	
R641	1-216-089-00	METAL GLAZE	47K	5%	1/10W	
R642	1-216-089-00	METAL GLAZE	47K	5%	1/10W	
R643	1-216-089-00	METAL GLAZE	47K	5%	1/10W	
R654	1-216-059-00	METAL GLAZE	2.7K	5%	1/10W	
R655	1-216-045-00	METAL GLAZE	680	5%	1/10W	
R656	1-216-053-00	METAL GLAZE	1.5K	5%	1/10W	
R657	1-216-049-00	METAL GLAZE	1K	5%	1/10W	
R658	1-216-051-00	METAL GLAZE	1.2K	5%	1/10W	
R659	1-216-049-00	METAL GLAZE	1K	5%	1/10W	
R660	1-216-097-00	METAL GLAZE	100K	5%	1/10W	
R661	1-216-081-00	METAL GLAZE	22K	5%	1/10W	
R662	1-216-295-00	METAL GLAZE	0	5%	1/10W	
R665	1-216-091-00	METAL GLAZE	56K	5%	1/10W	
R666	1-216-091-00	METAL GLAZE	56K	5%	1/10W	
R667	1-216-057-00	METAL GLAZE	2.2K	5%	1/10W	
R695	1-216-063-00	METAL GLAZE	3.9K	5%	1/10W	
R705	1-216-043-00	METAL GLAZE	560	5%	1/10W	
R706	1-216-043-00	METAL GLAZE	560	5%	1/10W	
R707	1-216-043-00	METAL GLAZE	560	5%	1/10W	
R708	1-216-043-00	METAL GLAZE	560	5%	1/10W	
R709	1-216-043-00	METAL GLAZE	560	5%	1/10W	
R710	1-216-043-00	METAL GLAZE	560	5%	1/10W	

No.	Part No.	Description				Remark
R711	1-216-043-00	METAL GLAZE	560	5%	1/10W	
R712	1-216-043-00	METAL GLAZE	560	5%	1/10W	
R777	1-216-295-00	METAL GLAZE	0	5%	1/10W	
R802	1-216-025-00	METAL GLAZE	100	5%	1/10W	
R803	1-216-081-00	METAL GLAZE	22K	5%	1/10W	
R804	1-216-081-00	METAL GLAZE	22K	5%	1/10W	
R805	1-216-053-00	METAL GLAZE	1.5K	5%	1/10W	
R806	1-216-067-00	METAL GLAZE	5.6K	5%	1/10W	
R807	1-216-073-00	METAL GLAZE	10K	5%	1/10W	
R808	1-216-065-00	METAL GLAZE	4.7K	5%	1/10W	
R809	1-216-045-00	METAL GLAZE	680	5%	1/10W	
R810	1-216-045-00	METAL GLAZE	680	5%	1/10W	
R811	1-216-029-00	METAL GLAZE	150	5%	1/10W	
R812	1-216-060-00	METAL GLAZE	3K	5%	1/10W	
R813	1-216-045-00	METAL GLAZE	680	5%	1/10W	
R814	1-216-073-00	METAL GLAZE	10K	5%	1/10W	
R815	1-216-049-00	METAL GLAZE	1K	5%	1/10W	
R816	1-216-065-00	METAL GLAZE	4.7K	5%	1/10W	
R817	1-216-049-00	METAL GLAZE	1K	5%	1/10W	
R818	1-216-071-00	METAL GLAZE	8.2K	5%	1/10W	
R819	1-216-081-00	METAL GLAZE	22K	5%	1/10W	
R820	1-216-071-00	METAL GLAZE	8.2K	5%	1/10W	
R821	1-216-081-00	METAL GLAZE	22K	5%	1/10W	
R822	1-216-049-00	METAL GLAZE	1K	5%	1/10W	
R823	1-216-045-00	METAL GLAZE	680	5%	1/10W	
R824	1-216-073-00	METAL GLAZE	10K	5%	1/10W	
R825	1-216-027-00	METAL GLAZE	120	5%	1/10W	
R826	1-216-045-00	METAL GLAZE	680	5%	1/10W	
R827	1-216-073-00	METAL GLAZE	10K	5%	1/10W	
R828	1-216-053-00	METAL GLAZE	1.5K	5%	1/10W	
R829	1-216-073-00	METAL GLAZE	10K	5%	1/10W	
R834	1-216-073-00	METAL GLAZE	10K	5%	1/10W	
R835	1-216-033-00	METAL GLAZE	220	5%	1/10W	
R836	1-216-032-00	METAL GLAZE	200	5%	1/10W	
R837	1-216-041-00	METAL GLAZE	470	5%	1/10W	
R838	1-216-073-00	METAL GLAZE	10K	5%	1/10W	
R839	1-216-041-00	METAL GLAZE	470	5%	1/10W	
R840	1-216-077-00	METAL GLAZE	15K	5%	1/10W	
R841	1-216-057-00	METAL GLAZE	2.2K	5%	1/10W	
R843	1-216-043-00	METAL GLAZE	560	5%	1/10W	
R844	1-216-295-00	METAL GLAZE	0	5%	1/10W	
R845	1-216-030-00	METAL GLAZE	160	5%	1/10W	
R846	1-216-051-00	METAL GLAZE	1.2K	5%	1/10W	
R901	1-216-081-00	METAL GLAZE	22K	5%	1/10W	
R902	1-216-049-00	METAL GLAZE	1K	5%	1/10W	
R903	1-216-069-00	METAL GLAZE	6.8K	5%	1/10W	
R904	1-216-069-00	METAL GLAZE	6.8K	5%	1/10W	
R931	1-216-049-00	METAL GLAZE	1K	5%	1/10W	
R950	1-216-085-00	METAL GLAZE	33K	5%	1/10W	
R952	1-216-073-00	METAL GLAZE	10K	5%	1/10W	
R953	1-216-067-00	METAL GLAZE	5.6K	5%	1/10W	
R954	1-216-055-00	METAL GLAZE	1.8K	5%	1/10W	
R955	1-216-073-00	METAL GLAZE	10K	5%	1/10W	

When indicating parts by reference number, please include the board name.

No.	Part No.	Description			Remark
R956	1-216-065-00	METAL GLAZE	4.7K	5% 1/10W	
R957	1-216-081-00	METAL GLAZE	22K	5% 1/10W	
R958	1-216-065-00	METAL GLAZE	4.7K	5% 1/10W	
R959	1-216-065-00	METAL GLAZE	4.7K	5% 1/10W	
R960	1-216-083-00	METAL GLAZE	27K	5% 1/10W	
R961	1-216-071-00	METAL GLAZE	8.2K	5% 1/10W	
R962	1-216-037-00	METAL GLAZE	330	5% 1/10W	
R963	1-216-069-00	METAL GLAZE	6.8K	5% 1/10W	
R964	1-216-061-00	METAL GLAZE	3.3K	5% 1/10W	
		VARIABLE RESISTOR			
RV101	1-228-993-00	RES, ADJ, CARBON 4.7K			
RV102	1-228-994-00	RES, ADJ, CARBON 10K			
RV107	1-228-994-00	RES, ADJ, CARBON 10K			
RV108	1-228-989-00	RES, ADJ, CARBON 470			
RV109	1-228-994-00	RES, ADJ, CARBON 10K			
RV110	1-228-998-00	RES, ADJ, CARBON 220K			
RV201	1-228-994-00	RES, ADJ, CARBON 10K			
RV202	1-228-994-00	RES, ADJ, CARBON 10K			
RV501	1-228-990-00	RES, ADJ, CARBON 1K			
RV502	1-228-989-00	RES, ADJ, CARBON 470			
RV503	1-228-990-00	RES, ADJ, CARBON 1K			
RV601	1-228-991-00	RES, ADJ, CARBON 2.2K			
RV602	1-228-991-00	RES, ADJ, CARBON 2.2K			
RV604	1-228-996-00	RES, ADJ, CARBON 47K			
RV605	1-228-993-00	RES, ADJ, CARBON 4.7K			
RV950	1-228-994-00	RES, ADJ, METAL GLAZE 10K			
		TRANSFORMER			
T301	1-409-396-11	REC C TRAP			
		CONNECTOR			
W002	*1-563-536-11	CONNECTOR, BOARD TO BOARD 18P			
		CRYSTAL			
X201	1-567-412-11	VIBRATOR, CRYSTAL (10.7MHz)			

****

*A-7061-372-B JG-11 BOARD, COMPLETE
****

		CAPACITOR			
C201	1-163-035-00	CERAMIC CHIP	0.047MF		50V
C202	1-163-105-00	CERAMIC CHIP	33PF	5%	50V
C203	1-163-105-00	CERAMIC CHIP	33PF	5%	50V
C204	1-163-021-00	CERAMIC CHIP	0.01MF		50V
C205	1-126-157-11	ELECT	10MF	20%	16V
C206	1-163-035-00	CERAMIC CHIP	0.047MF		50V
C207	1-126-154-11	ELECT	47MF	20%	6.3V
C208	1-163-035-00	CERAMIC CHIP	0.047MF		50V
C209	1-126-157-11	ELECT	10MF	20%	16V
C210	1-163-021-00	CERAMIC CHIP	0.01MF		50V
C211	1-124-234-00	ELECT	22MF	20%	16V
C212	1-126-157-11	ELECT	10MF	20%	16V
C213	1-163-038-00	CERAMIC CHIP	0.1MF		25V
C214	1-163-127-00	CERAMIC CHIP	270PF	5%	50V
C215	1-163-127-00	CERAMIC CHIP	270PF	5%	50V
C216	1-126-157-11	ELECT	10MF	20%	16V
C217	1-126-157-11	ELECT	10MF	20%	16V
C218	1-163-033-00	CERAMIC CHIP	0.022MF		50V
C219	1-124-589-11	ELECT	47MF	20%	16V
C220	1-163-035-00	CERAMIC CHIP	0.047MF		50V
C221	1-126-157-11	ELECT	10MF	20%	16V
C222	1-163-034-00	CERAMIC CHIP	0.033MF		50V
C223	1-163-241-11	CERAMIC CHIP	39PF	5%	50V
C224	1-163-021-00	CERAMIC CHIP	0.01MF		50V
C225	1-124-234-00	ELECT	22MF	20%	16V
C226	1-124-589-11	ELECT	47MF	20%	16V
C227	1-163-035-00	CERAMIC CHIP	0.047MF		50V
C228	1-126-157-11	ELECT	10MF	20%	16V
C229	1-126-157-11	ELECT	10MF	20%	16V
C231	1-163-038-00	CERAMIC CHIP	0.1MF		25V
C232	1-163-038-00	CERAMIC CHIP	0.1MF		25V
C233	1-163-035-00	CERAMIC CHIP	0.047MF		50V
C234	1-163-105-00	CERAMIC CHIP	33PF	5%	50V
C235	1-163-105-00	CERAMIC CHIP	33PF	5%	50V
C236	1-163-035-00	CERAMIC CHIP	0.047MF		50V
C237	1-163-021-00	CERAMIC CHIP	0.01MF		50V
C238	1-126-157-11	ELECT	10MF	20%	16V
C239	1-163-035-00	CERAMIC CHIP	0.047MF		50V
C240	1-124-589-11	ELECT	47MF	20%	16V
C241	1-163-035-00	CERAMIC CHIP	0.047MF		50V
C242	1-126-157-11	ELECT	10MF	20%	16V
C243	1-163-021-00	CERAMIC CHIP	0.01MF		50V
C244	1-124-234-00	ELECT	22MF	20%	16V
C245	1-126-157-11	ELECT	10MF	20%	16V
C246	1-163-127-00	CERAMIC CHIP	270PF	5%	50V
C247	1-163-127-00	CERAMIC CHIP	270PF	5%	50V
C248	1-163-035-00	CERAMIC CHIP	0.047MF		50V
C249	1-126-157-11	ELECT	10MF	20%	16V
C250	1-163-033-00	CERAMIC CHIP	0.022MF		50V
C251	1-124-589-11	ELECT	47MF	20%	16V
C252	1-163-035-00	CERAMIC CHIP	0.047MF		50V
C253	1-163-021-00	CERAMIC CHIP	0.01MF		50V
C254	1-126-094-11	ELECT	4.7MF	20%	25V
C255	1-163-009-11	CERAMIC CHIP	0.001MF	10%	50V
C256	1-163-038-00	CERAMIC CHIP	0.1MF		25V
C257	1-163-093-00	CERAMIC CHIP	10PF	5%	50V
C258	1-163-021-00	CERAMIC CHIP	0.01MF		50V
C259	1-163-021-00	CERAMIC CHIP	0.01MF		50V
C261	1-163-038-00	CERAMIC CHIP	0.1MF		25V
C262	1-163-038-00	CERAMIC CHIP	0.1MF		25V
C263	1-126-154-11	ELECT	47MF	20%	6.3V
C264	1-124-589-11	ELECT	47MF	20%	16V

When indicating parts by reference number, please include the board name.

No.	Part No.	Description		Remark
C266	1-163-038-00	CERAMIC CHIP 0.1MF		25V
C267	1-164-161-11	CERAMIC CHIP 0.0022MF	10%	50V
		FILTER		
CF201	1-567-390-11	FILTER, CERAMIC		
CF202	1-409-332-00	CERAMIC TRAP (4.5MHZ)		
		CONNECTOR		
CN201	1-506-469-11	PIN, CONNECTOR 4P		
CN202	1-506-473-11	PIN, CONNECTOR 8P		
CN203	1-506-475-11	PIN, CONNECTOR 10P		
		DIODE		
D201	8-719-100-05	DIODE 1S2837		
D203	8-719-100-05	DIODE 1S2837		
D204	8-719-100-05	DIODE 1S2837		
		IC		
IC201	8-752-322-24	IC CXL1008M		
IC202	8-752-322-24	IC CXL1008M		
IC203	8-759-207-38	IC TA7374P		
IC204	8-759-941-68	IC BA7131F		
IC205	8-759-941-68	IC BA7131F		
		COIL		
L201	1-408-980-21	INDUCTOR	68UH	
L202	1-408-982-11	INDUCTOR	100UH	
L203	1-408-982-11	INDUCTOR	100UH	
L204	1-408-970-21	INDUCTOR	10UH	
L205	1-408-982-11	INDUCTOR	100UH	
L206	1-408-980-21	INDUCTOR	68UH	
L207	1-410-381-11	INDUCTOR CHIP	10UH	
L208	1-408-982-11	INDUCTOR	100UH	
L209	1-408-970-21	INDUCTOR	10UH	
L210	1-408-982-11	INDUCTOR	100UH	
L211	1-408-971-21	INDUCTOR	12UH	
L212	1-408-978-21	INDUCTOR	47UH	
L213	1-408-982-11	INDUCTOR	100UH	
L214	1-410-377-11	INDUCTOR CHIP	4.7UH	
		TRANSISTOR		
Q201	8-729-100-76	TRANSISTOR 2SA812		
Q202	8-729-100-76	TRANSISTOR 2SA812		
Q203	8-729-100-76	TRANSISTOR 2SA812		
Q204	8-729-100-76	TRANSISTOR 2SA812		
Q205	8-729-100-76	TRANSISTOR 2SA812		
Q206	8-729-901-01	TRANSISTOR DTC144EK		
Q207	8-729-901-01	TRANSISTOR DTC144EK		
Q208	8-729-100-76	TRANSISTOR 2SA812		
Q209	8-729-100-66	TRANSISTOR 2SC1623		
Q210	8-729-100-66	TRANSISTOR 2SC1623		
Q211	8-729-100-66	TRANSISTOR 2SC1623		
Q212	8-729-100-66	TRANSISTOR 2SC1623		

No.	Part No.	Description		Remark
Q213	8-729-100-76	TRANSISTOR 2SA812		
Q214	8-729-100-76	TRANSISTOR 2SA812		
Q215	8-729-100-76	TRANSISTOR 2SA812		
Q216	8-729-100-76	TRANSISTOR 2SA812		
Q217	8-729-100-76	TRANSISTOR 2SA812		
Q219	8-729-100-66	TRANSISTOR 2SC1623		
Q221	8-729-901-01	TRANSISTOR DTC144EK		
Q222	8-729-100-76	TRANSISTOR 2SA812		
Q223	8-729-100-76	TRANSISTOR 2SA812		
Q224	8-729-900-98	TRANSISTOR DTC143TK		
Q225	8-729-100-76	TRANSISTOR 2SA812		
Q226	8-729-901-01	TRANSISTOR DTC144EK		
		RESISTOR		
R201	1-216-049-00	METAL GLAZE	1K 5%	1/10W
R202	1-216-049-00	METAL GLAZE	1K 5%	1/10W
R203	1-216-097-00	METAL GLAZE	100K 5%	1/10W
R205	1-216-113-00	METAL GLAZE	470K 5%	1/10W
R206	1-216-129-00	METAL GLAZE	2.2M 5%	1/10W
R207	1-216-129-00	METAL GLAZE	2.2M 5%	1/10W
R208	1-216-105-00	METAL GLAZE	220K 5%	1/10W
R209	1-216-073-00	METAL GLAZE	10K 5%	1/10W
R210	1-216-105-00	METAL GLAZE	220K 5%	1/10W
R211	1-216-057-00	METAL GLAZE	2.2K 5%	1/10W
R212	1-216-057-00	METAL GLAZE	2.2K 5%	1/10W
R213	1-216-027-00	METAL GLAZE	120 5%	1/10W
R214	1-216-049-00	METAL GLAZE	1K 5%	1/10W
R215	1-216-065-00	METAL GLAZE	4.7K 5%	1/10W
R216	1-216-073-00	METAL GLAZE	10K 5%	1/10W
R217	1-216-039-00	METAL GLAZE	390 5%	1/10W
R218	1-216-033-00	METAL GLAZE	220 5%	1/10W
R219	1-216-039-00	METAL GLAZE	390 5%	1/10W
R220	1-216-079-00	METAL GLAZE	18K 5%	1/10W
R221	1-216-071-00	METAL GLAZE	8.2K 5%	1/10W
R222	1-216-055-00	METAL GLAZE	1.8K 5%	1/10W
R223	1-216-121-00	METAL GLAZE	1M 5%	1/10W
R225	1-216-043-00	METAL GLAZE	560 5%	1/10W
R226	1-216-053-00	METAL GLAZE	1.5K 5%	1/10W
R227	1-216-049-00	METAL GLAZE	1K 5%	1/10W
R228	1-216-075-00	METAL GLAZE	12K 5%	1/10W
R229	1-216-081-00	METAL GLAZE	22K 5%	1/10W
R230	1-216-089-00	METAL GLAZE	47K 5%	1/10W
R231	1-216-025-00	METAL GLAZE	100 5%	1/10W
R232	1-216-073-00	METAL GLAZE	10K 5%	1/10W
R233	1-216-049-00	METAL GLAZE	1K 5%	1/10W
R234	1-216-025-00	METAL GLAZE	100 5%	1/10W
R235	1-216-033-00	METAL GLAZE	220 5%	1/10W
R236	1-216-073-00	METAL GLAZE	10K 5%	1/10W
R237	1-216-043-00	METAL GLAZE	560 5%	1/10W
R238	1-216-041-00	METAL GLAZE	470 5%	1/10W
R239	1-216-033-00	METAL GLAZE	220 5%	1/10W
R240	1-216-039-00	METAL GLAZE	390 5%	1/10W
R241	1-216-047-00	METAL GLAZE	820 5%	1/10W

When indicating parts by reference number, please include the board name.

No.	Part No.	Description				Remark
R242	1-216-043-00	METAL GLAZE	560	5%	1/10W	
R243	1-216-048-00	METAL GLAZE	910	5%	1/10W	
R244	1-216-073-00	METAL GLAZE	10K	5%	1/10W	
R245	1-216-073-00	METAL GLAZE	10K	5%	1/10W	
R246	1-216-077-00	METAL GLAZE	15K	5%	1/10W	
R247	1-216-049-00	METAL GLAZE	1K	5%	1/10W	
R248	1-216-097-00	METAL GLAZE	100K	5%	1/10W	
R249	1-216-081-00	METAL GLAZE	22K	5%	1/10W	
R250	1-216-081-00	METAL GLAZE	22K	5%	1/10W	
R251	1-216-105-00	METAL GLAZE	220K	5%	1/10W	
R252	1-216-073-00	METAL GLAZE	10K	5%	1/10W	
R253	1-216-081-00	METAL GLAZE	22K	5%	1/10W	
R254	1-216-073-00	METAL GLAZE	10K	5%	1/10W	
R255	1-216-105-00	METAL GLAZE	220K	5%	1/10W	
R256	1-216-057-00	METAL GLAZE	2.2K	5%	1/10W	
R257	1-216-027-00	METAL GLAZE	120	5%	1/10W	
R258	1-216-073-00	METAL GLAZE	10K	5%	1/10W	
R259	1-216-065-00	METAL GLAZE	4.7K	5%	1/10W	
R260	1-216-039-00	METAL GLAZE	390	5%	1/10W	
R261	1-216-033-00	METAL GLAZE	220	5%	1/10W	
R262	1-216-039-00	METAL GLAZE	390	5%	1/10W	
R263	1-216-071-00	METAL GLAZE	8.2K	5%	1/10W	
R264	1-216-079-00	METAL GLAZE	18K	5%	1/10W	
R265	1-216-055-00	METAL GLAZE	1.8K	5%	1/10W	
R266	1-216-119-00	METAL GLAZE	820K	5%	1/10W	
R267	1-216-121-00	METAL GLAZE	1M	5%	1/10W	
R268	1-216-049-00	METAL GLAZE	1K	5%	1/10W	
R269	1-216-025-00	METAL GLAZE	100	5%	1/10W	
R270	1-216-025-00	METAL GLAZE	100	5%	1/10W	
R271	1-216-025-00	METAL GLAZE	100	5%	1/10W	
R272	1-216-049-00	METAL GLAZE	1K	5%	1/10W	
R273	1-216-025-00	METAL GLAZE	100	5%	1/10W	
R274	1-216-037-00	METAL GLAZE	330	5%	1/10W	
R275	1-216-045-00	METAL GLAZE	680	5%	1/10W	
R276	1-216-059-00	METAL GLAZE	2.7K	5%	1/10W	
R277	1-216-035-00	METAL GLAZE	270	5%	1/10W	
R278	1-216-038-00	METAL GLAZE	360	5%	1/10W	
R279	1-216-037-00	METAL GLAZE	330	5%	1/10W	
R280	1-216-037-00	METAL GLAZE	330	5%	1/10W	
R281	1-216-067-00	METAL GLAZE	5.6K	5%	1/10W	
R282	1-216-081-00	METAL GLAZE	22K	5%	1/10W	
R283	1-216-083-00	METAL GLAZE	27K	5%	1/10W	
R284	1-216-295-00	METAL GLAZE	0	5%	1/10W	
R287	1-216-051-00	METAL GLAZE	1.2K	5%	1/10W	
R288	1-216-073-00	METAL GLAZE	10K	5%	1/10W	
R290	1-216-089-00	METAL GLAZE	47K	5%	1/10W	
R291	1-216-073-00	METAL GLAZE	10K	5%	1/10W	
R292	1-216-049-00	METAL GLAZE	1K	5%	1/10W	
R293	1-216-049-00	METAL GLAZE	1K	5%	1/10W	
R294	1-216-049-00	METAL GLAZE	1K	5%	1/10W	
R295	1-216-049-00	METAL GLAZE	1K	5%	1/10W	

No.	Part No.	Description	Remark
		VARIABLE RESISTOR	
RV201	1-228-991-00	RES, ADJ, CARBON 2.2K	
RV202	1-228-991-00	RES, ADJ, CARBON 2.2K	
**********			
	*A-7061-373-A	CH-44 BOARD, COMPLETE	
		**********	
		CAPACITOR	
C001	1-163-098-00	CERAMIC CHIP 16PF 5% 50V	
C002	1-163-009-11	CERAMIC CHIP 0.001MF 10% 50V	
C003	1-163-109-00	CERAMIC CHIP 47PF 5% 50V	
C004	1-163-129-00	CERAMIC CHIP 330PF 5% 50V	
C005	1-163-129-00	CERAMIC CHIP 330PF 5% 50V	
C006	1-163-021-00	CERAMIC CHIP 0.01MF 50V	
C007	1-163-063-00	CERAMIC CHIP 0.022MF 50V	
C008	1-131-358-00	TANTALUM 6.8MF 10% 25V	
C009	1-126-094-11	ELECT 4.7MF 20% 35V	
C010	1-135-149-21	TANTAL. CHIP 2.2MF 20% 10V	
C011	1-163-021-00	CERAMIC CHIP 0.01MF 50V	
C012	1-163-021-00	CERAMIC CHIP 0.01MF 50V	
C013	1-163-075-00	CERAMIC CHIP 0.047MF 50V	
C014	1-126-157-11	ELECT 10MF 20% 16V	
C016	1-216-295-00	METAL GLAZE 0 5% 1/10W	
C017	1-124-257-00	ELECT 2.2MF 20% 50V	
C018	1-135-072-21	TANTAL. CHIP 0.22MF 20% 35V	
C019	1-163-205-00	CERAMIC CHIP 0.001MF 10% 50V	
C020	1-163-076-00	CERAMIC CHIP 0.068MF 50V	
C021	1-124-257-00	ELECT 2.2MF 20% 50V	
C022	1-124-257-00	ELECT 2.2MF 20% 50V	
C023	1-163-009-11	CERAMIC CHIP 0.001MF 10% 50V	
C024	1-163-129-00	CERAMIC CHIP 330PF 5% 50V	
C025	1-163-035-00	CERAMIC CHIP 0.047MF 50V	
C026	1-163-117-00	CERAMIC CHIP 100PF 5% 50V	
C027	1-163-009-11	CERAMIC CHIP 0.001MF 10% 50V	
C028	1-126-157-11	ELECT 10MF 20% 16V	
C029	1-163-021-00	CERAMIC CHIP 0.01MF 50V	
C031	1-163-021-00	CERAMIC CHIP 0.01MF 50V	
C032	1-163-129-00	CERAMIC CHIP 330PF 5% 50V	
C034	1-163-104-00	CERAMIC CHIP 30PF 5% 50V	
C035	1-163-125-00	CERAMIC CHIP 220PF 5% 50V	
C036	1-163-129-00	CERAMIC CHIP 330PF 5% 50V	
C037	1-163-129-00	CERAMIC CHIP 330PF 5% 50V	
C038	1-124-463-00	ELECT 0.1MF 20% 50V	
C039	1-124-252-00	ELECT 0.33MF 20% 50V	
C040	1-163-021-00	CERAMIC CHIP 0.01MF 50V	
		TRIMMER	
CV001	1-141-227-00	CAP, CERAMIC TRIMMER 20PF	

When indicating parts by reference number, please include the board name.

No.	Part No.	Description			Remark
		IC			
IC001	8-752-003-23	IC CX20032			
IC002	8-759-924-94	IC CX22021			
		COIL			
L001	1-408-976-21	INDUCTOR	33UH		
L002	1-408-985-21	INDUCTOR	180UH		
L003	1-408-981-21	INDUCTOR	82UH		
L004	1-408-968-21	INDUCTOR	6.8UH		
		RESISTOR			
R002	1-216-295-00	METAL GLAZE	0	5% 1/10W	
R003	1-216-073-00	METAL GLAZE	10K	5% 1/10W	
R004	1-216-053-00	METAL GLAZE	1.5K	5% 1/10W	
R005	1-216-065-00	METAL GLAZE	4.7K	5% 1/10W	
R006	1-216-075-00	METAL GLAZE	12K	5% 1/10W	
R007	1-216-061-00	METAL GLAZE	3.3K	5% 1/10W	
R008	1-216-065-00	METAL GLAZE	4.7K	5% 1/10W	
R009	1-216-025-00	METAL GLAZE	100	5% 1/10W	
R010	1-216-081-00	METAL GLAZE	22K	5% 1/10W	
R011	1-216-097-00	METAL GLAZE	100K	5% 1/10W	
R012	1-216-063-00	METAL GLAZE	3.9K	5% 1/10W	
R013	1-216-073-00	METAL GLAZE	10K	5% 1/10W	
R015	1-216-081-00	METAL GLAZE	22K	5% 1/10W	
R016	1-216-081-00	METAL GLAZE	22K	5% 1/10W	
R017	1-216-043-00	METAL GLAZE	560	5% 1/10W	
R018	1-216-043-00	METAL GLAZE	560	5% 1/10W	
R019	1-216-073-00	METAL GLAZE	10K	5% 1/10W	
R020	1-216-027-00	METAL GLAZE	120	5% 1/10W	
R021	1-216-073-00	METAL GLAZE	10K	5% 1/10W	
R022	1-216-081-00	METAL GLAZE	22K	5% 1/10W	
R023	1-216-067-00	METAL GLAZE	5.6K	5% 1/10W	
R024	1-216-065-00	METAL GLAZE	4.7K	5% 1/10W	
R026	1-216-073-00	METAL GLAZE	10K	5% 1/10W	
R029	1-216-103-00	METAL GLAZE	180K	5% 1/10W	
R030	1-216-065-00	METAL GLAZE	4.7K	5% 1/10W	
		VARIABLE RESISTOR			
RV001	1-230-524-11	RES, ADJ, SOLID 22K			
RV002	1-230-523-11	RES, ADJ, SOLID 10K			
		TRANSFORMER			
T001	1-409-386-11	C E TRAP			
		CRYSTAL			
X001	1-567-505-11	OSCILLATOR, CRYSTAL (4.43MHz)			

****

No.	Part No.	Description			Remark
	*A-7061-374-A	YC-56 BOARD, COMPLETE			
		**********			
		CAPACITOR			
C001	1-163-035-00	CERAMIC CHIP	0.047MF	50V	
C002	1-124-638-11	ELECT	22MF	20% 6.3V	
C003	1-126-157-11	ELECT	10MF	20% 16V	
C004	1-163-021-00	CERAMIC CHIP	0.01MF	50V	
C005	1-163-021-00	CERAMIC CHIP	0.01MF	50V	
C006	1-124-638-11	ELECT	22MF	20% 6.3V	
C007	1-124-638-11	ELECT	22MF	20% 6.3V	
C008	1-163-106-00	CERAMIC CHIP	36PF	5% 50V	
C009	1-163-107-00	CERAMIC CHIP	39PF	5% 50V	
C010	1-163-111-00	CERAMIC CHIP	56PF	5% 50V	
C011	1-124-635-00	ELECT	220MF	20% 6.3V	
C012	1-124-638-11	ELECT	22MF	20% 6.3V	
C013	1-163-129-00	CERAMIC CHIP	330PF	5% 50V	
C014	1-163-115-00	CERAMIC CHIP	82PF	5% 50V	
C015	1-163-115-00	CERAMIC CHIP	82PF	5% 50V	
C016	1-126-154-11	ELECT	47MF	20% 6.3V	
C019	1-126-154-11	ELECT	47MF	20% 6.3V	
C020	1-124-638-11	ELECT	22MF	20% 6.3V	
C021	1-163-035-00	CERAMIC CHIP	0.047MF	50V	
C022	1-163-125-00	CERAMIC CHIP	220PF	5% 50V	
C023	1-163-021-00	CERAMIC CHIP	0.01MF	50V	
C024	1-163-035-00	CERAMIC CHIP	0.047MF	50V	
C025	1-163-075-00	CERAMIC CHIP	0.047MF	50V	
C026	1-163-097-00	CERAMIC CHIP	15PF	5% 50V	
C027	1-163-021-00	CERAMIC CHIP	0.01MF	50V	
C028	1-163-021-00	CERAMIC CHIP	0.01MF	50V	
C029	1-126-094-11	ELECT	4.7MF	20% 25V	
C030	1-163-117-00	CERAMIC CHIP	100PF	5% 50V	
C031	1-163-035-00	CERAMIC CHIP	0.047MF	50V	
C032	1-163-021-00	CERAMIC CHIP	0.01MF	50V	
C033	1-163-021-00	CERAMIC CHIP	0.01MF	50V	
C034	1-163-021-00	CERAMIC CHIP	0.01MF	50V	
C035	1-163-035-00	CERAMIC CHIP	0.047MF	50V	
C036	1-126-094-11	ELECT	4.7MF	20% 25V	
C037	1-163-119-00	CERAMIC CHIP	120PF	5% 50V	
C038	1-163-021-00	CERAMIC CHIP	0.01MF	50V	
C039	1-163-035-00	CERAMIC CHIP	0.047MF	50V	
C040	1-163-021-00	CERAMIC CHIP	0.01MF	50V	
C041	1-163-021-00	CERAMIC CHIP	0.01MF	50V	
C042	1-163-021-00	CERAMIC CHIP	0.01MF	50V	
C043	1-163-021-00	CERAMIC CHIP	0.01MF	50V	
C044	1-163-035-00	CERAMIC CHIP	0.047MF	50V	
C045	1-126-154-11	ELECT	47MF	20% 6.3V	
C046	1-163-035-00	CERAMIC CHIP	0.047MF	50V	
C047	1-163-035-00	CERAMIC CHIP	0.047MF	50V	
C048	1-163-035-00	CERAMIC CHIP	0.047MF	50V	
C049	1-163-099-00	CERAMIC CHIP	18PF	5% 50V	
C050	1-163-099-00	CERAMIC CHIP	18PF	5% 50V	
C051	1-163-035-00	CERAMIC CHIP	0.047MF	50V	

When indicating parts by reference number, please include the board name.

No.	Part No.	Description		Remark
		DIODE		
D001	8-719-101-23	DIODE 1SS123		
		DELAY LINE		
DL001	1-415-342-00	DELAY LINE, 1H		
DL002	1-415-342-00	DELAY LINE, 1H		
		IC		
IC001	8-759-030-34	IC MC1496MR		
IC002	8-759-030-34	IC MC1496MR		
		COIL		
L001	1-408-972-21	INDUCTOR	15UH	
L002	1-408-979-21	INDUCTOR	56UH	
L003	1-408-973-21	INDUCTOR	18UH	
L004	1-408-974-21	INDUCTOR	22UH	
L005	1-408-976-21	INDUCTOR	33UH	
L006	1-408-970-21	INDUCTOR	10UH	
L008	1-408-984-21	INDUCTOR	150UH	
L009	1-408-972-21	INDUCTOR	15UH	
L010	1-408-973-21	INDUCTOR	18UH	
L011	1-408-972-21	INDUCTOR	15UH	
L012	1-408-977-21	INDUCTOR	39UH	
		VARIABLE COIL		
LV001	1-408-520-00	COIL, VARIABLE	15UH	
LV002	1-408-520-00	COIL, VARIABLE	15UH	
		TRANSISTOR		
Q001	8-729-100-66	TRANSISTOR	2SC1623	
Q002	8-729-100-66	TRANSISTOR	2SC1623	
Q003	8-729-100-66	TRANSISTOR	2SC1623	
Q004	8-729-100-66	TRANSISTOR	2SC1623	
Q005	8-729-100-66	TRANSISTOR	2SC1623	
Q006	8-729-100-76	TRANSISTOR	2SA812	
Q007	8-729-100-76	TRANSISTOR	2SA812	
Q008	8-729-100-76	TRANSISTOR	2SA812	
Q009	8-729-100-66	TRANSISTOR	2SC1623	
Q010	8-729-100-66	TRANSISTOR	2SC1623	
Q011	8-729-100-66	TRANSISTOR	2SC1623	
Q012	8-729-100-66	TRANSISTOR	2SC1623	
Q013	8-729-100-66	TRANSISTOR	2SC1623	
Q014	8-729-100-66	TRANSISTOR	2SC1623	
Q015	8-729-100-66	TRANSISTOR	2SC1623	
Q016	8-729-100-66	TRANSISTOR	2SC1623	
Q017	8-729-100-66	TRANSISTOR	2SC1623	
Q018	8-729-100-66	TRANSISTOR	2SC1623	
Q019	8-729-100-66	TRANSISTOR	2SC1623	
Q020	8-729-100-66	TRANSISTOR	2SC1623	
Q021	8-729-100-76	TRANSISTOR	2SA812	
Q022	8-729-100-66	TRANSISTOR	2SC1623	
Q023	8-729-100-66	TRANSISTOR	2SC1623	
Q024	8-729-100-66	TRANSISTOR	2SC1623	
Q025	8-729-100-66	TRANSISTOR	2SC1623	
Q026	8-729-100-66	TRANSISTOR	2SC1623	
Q027	8-729-100-66	TRANSISTOR	2SC1623	
Q028	8-729-100-66	TRANSISTOR	2SC1623	
		RESISTOR		
R001	1-216-081-00	METAL GLAZE	22K 5% 1/10W	
R002	1-216-075-00	METAL GLAZE	12K 5% 1/10W	
R003	1-216-031-00	METAL GLAZE	180 5% 1/10W	
R004	1-216-081-00	METAL GLAZE	22K 5% 1/10W	
R005	1-216-077-00	METAL GLAZE	15K 5% 1/10W	
R006	1-216-043-00	METAL GLAZE	560 5% 1/10W	
R007	1-216-043-00	METAL GLAZE	560 5% 1/10W	
R008	1-216-043-00	METAL GLAZE	560 5% 1/10W	
R009	1-216-043-00	METAL GLAZE	560 5% 1/10W	
R010	1-216-043-00	METAL GLAZE	560 5% 1/10W	
R011	1-216-043-00	METAL GLAZE	560 5% 1/10W	
R012	1-216-051-00	METAL GLAZE	1.2K 5% 1/10W	
R013	1-216-052-00	METAL GLAZE	1.3K 5% 1/10W	
R014	1-216-075-00	METAL GLAZE	12K 5% 1/10W	
R015	1-216-081-00	METAL GLAZE	22K 5% 1/10W	
R016	1-216-051-00	METAL GLAZE	1.2K 5% 1/10W	
R017	1-216-055-00	METAL GLAZE	1.8K 5% 1/10W	
R018	1-216-075-00	METAL GLAZE	12K 5% 1/10W	
R019	1-216-081-00	METAL GLAZE	22K 5% 1/10W	
R020	1-216-049-00	METAL GLAZE	1K 5% 1/10W	
R021	1-216-295-00	METAL GLAZE	0 5% 1/10W	
R022	1-216-053-00	METAL GLAZE	1.5K 5% 1/10W	
R023	1-216-041-00	METAL GLAZE	470 5% 1/10W	
R024	1-216-049-00	METAL GLAZE	1K 5% 1/10W	
R025	1-216-645-11	METAL CHIP	560 0.50% 1/10W	
R026	1-216-645-11	METAL CHIP	560 0.50% 1/10W	
R027	1-216-065-00	METAL GLAZE	4.7K 5% 1/10W	
R028	1-216-073-00	METAL GLAZE	10K 5% 1/10W	
R029	1-216-047-00	METAL GLAZE	820 5% 1/10W	
R030	1-216-041-00	METAL GLAZE	470 5% 1/10W	
R031	1-216-041-00	METAL GLAZE	470 5% 1/10W	
R032	1-216-049-00	METAL GLAZE	1K 5% 1/10W	
R033	1-216-037-00	METAL GLAZE	330 5% 1/10W	
R034	1-216-031-00	METAL GLAZE	180 5% 1/10W	
R035	1-216-033-00	METAL GLAZE	220 5% 1/10W	
R036	1-216-051-00	METAL GLAZE	1.2K 5% 1/10W	
R037	1-216-049-00	METAL GLAZE	1K 5% 1/10W	
R038	1-216-295-00	METAL GLAZE	0 5% 1/10W	
R039	1-216-047-00	METAL GLAZE	820 5% 1/10W	
R041	1-216-053-00	METAL GLAZE	1.5K 5% 1/10W	
R042	1-216-047-00	METAL GLAZE	820 5% 1/10W	
R043	1-216-111-00	METAL GLAZE	390K 5% 1/10W	
R044	1-216-073-00	METAL GLAZE	10K 5% 1/10W	
R045	1-216-041-00	METAL GLAZE	470 5% 1/10W	
R046	1-216-045-00	METAL GLAZE	680 5% 1/10W	

When indicating parts by reference number, please include the board name.

No.	Part No.	Description				Remark
R047	1-216-047-00	METAL GLAZE	820	5%	1/10W	
R048	1-216-047-00	METAL GLAZE	820	5%	1/10W	
R049	1-216-047-00	METAL GLAZE	820	5%	1/10W	
R050	1-216-047-00	METAL GLAZE	820	5%	1/10W	
R051	1-216-067-00	METAL GLAZE	5.6K	5%	1/10W	
R052	1-216-075-00	METAL GLAZE	12K	5%	1/10W	
R053	1-216-049-00	METAL GLAZE	1K	5%	1/10W	
R054	1-216-041-00	METAL GLAZE	470	5%	1/10W	
R055	1-216-041-00	METAL GLAZE	470	5%	1/10W	
R056	1-216-061-00	METAL GLAZE	3.3K	5%	1/10W	
R057	1-216-057-00	METAL GLAZE	2.2K	5%	1/10W	
R058	1-216-073-00	METAL GLAZE	10K	5%	1/10W	
R059	1-216-071-00	METAL GLAZE	8.2K	5%	1/10W	
R060	1-216-043-00	METAL GLAZE	560	5%	1/10W	
R061	1-216-043-00	METAL GLAZE	560	5%	1/10W	
R062	1-216-045-00	METAL GLAZE	680	5%	1/10W	
R063	1-216-045-00	METAL GLAZE	680	5%	1/10W	
R064	1-216-041-00	METAL GLAZE	470	5%	1/10W	
R065	1-216-041-00	METAL GLAZE	470	5%	1/10W	
R066	1-216-051-00	METAL GLAZE	1.2K	5%	1/10W	
R067	1-216-055-00	METAL GLAZE	1.8K	5%	1/10W	
R068	1-216-045-00	METAL GLAZE	680	5%	1/10W	
R069	1-216-079-00	METAL GLAZE	18K	5%	1/10W	
R070	1-216-083-00	METAL GLAZE	27K	5%	1/10W	
R071	1-216-045-00	METAL GLAZE	680	5%	1/10W	
R072	1-216-045-00	METAL GLAZE	680	5%	1/10W	
R073	1-216-073-00	METAL GLAZE	10K	5%	1/10W	
R074	1-216-073-00	METAL GLAZE	10K	5%	1/10W	
R075	1-216-051-00	METAL GLAZE	1.2K	5%	1/10W	
R076	1-216-049-00	METAL GLAZE	1K	5%	1/10W	
R077	1-216-045-00	METAL GLAZE	680	5%	1/10W	
R078	1-216-079-00	METAL GLAZE	18K	5%	1/10W	
R079	1-216-077-00	METAL GLAZE	15K	5%	1/10W	
R080	1-216-079-00	METAL GLAZE	18K	5%	1/10W	
R081	1-216-083-00	METAL GLAZE	27K	5%	1/10W	
R082	1-216-045-00	METAL GLAZE	680	5%	1/10W	
R083	1-216-045-00	METAL GLAZE	680	5%	1/10W	
R084	1-216-073-00	METAL GLAZE	10K	5%	1/10W	
R085	1-216-073-00	METAL GLAZE	10K	5%	1/10W	
R086	1-216-081-00	METAL GLAZE	22K	5%	1/10W	
R087	1-216-055-00	METAL GLAZE	1.8K	5%	1/10W	
R088	1-216-049-00	METAL GLAZE	1K	5%	1/10W	
R089	1-216-083-00	METAL GLAZE	27K	5%	1/10W	
R090	1-216-075-00	METAL GLAZE	12K	5%	1/10W	
R091	1-216-069-00	METAL GLAZE	6.8K	5%	1/10W	
R092	1-216-075-00	METAL GLAZE	12K	5%	1/10W	
R093	1-216-075-00	METAL GLAZE	12K	5%	1/10W	
R094	1-216-081-00	METAL GLAZE	22K	5%	1/10W	
R095	1-216-059-00	METAL GLAZE	2.7K	5%	1/10W	
R096	1-216-063-00	METAL GLAZE	3.9K	5%	1/10W	
R097	1-216-069-00	METAL GLAZE	6.8K	5%	1/10W	
R098	1-216-075-00	METAL GLAZE	12K	5%	1/10W	
R099	1-216-073-00	METAL GLAZE	10K	5%	1/10W	
R100	1-216-073-00	METAL GLAZE	10K	5%	1/10W	
R101	1-216-057-00	METAL GLAZE	2.2K	5%	1/10W	
R102	1-216-039-00	METAL GLAZE	390	5%	1/10W	
R103	1-216-041-00	METAL GLAZE	470	5%	1/10W	
R104	1-216-049-00	METAL GLAZE	1K	5%	1/10W	
R105	1-216-073-00	METAL GLAZE	10K	5%	1/10W	
R106	1-216-077-00	METAL GLAZE	15K	5%	1/10W	
R107	1-216-049-00	METAL GLAZE	1K	5%	1/10W	
R108	1-216-049-00	METAL GLAZE	1K	5%	1/10W	

VARIABLE RESISTOR

RV001	1-228-989-00	RES, ADJ, CARBON	470
RV002	1-228-990-00	RES, ADJ, CARBON	1K
RV003	1-228-990-00	RES, ADJ, CARBON	1K
RV004	1-228-989-00	RES, ADJ, CARBON	470
RV005	1-228-991-00	RES, ADJ, CARBON	2.2K

CONNECTOR

W001	*1-563-313-11	CONNECTOR, BOARD TO BOARD	19P

****

*A-7061-494-A NC-8 BOARD, COMPLETE
****

CAPACITOR

C401	1-163-133-00	CERAMIC CHIP	470PF	10%	50V
C402	1-163-133-00	CERAMIC CHIP	470PF	10%	50V
C403	1-126-094-11	ELECT	4.7MF	20%	25V
C404	1-163-092-00	CERAMIC CHIP	9PF	0.25PF	50V
C405	1-163-097-00	CERAMIC CHIP	15PF	5%	50V
C406	1-124-638-11	ELECT	22MF	20%	6.3V
C407	1-163-035-00	CERAMIC CHIP	0.047MF		50V
C415	1-163-111-00	CERAMIC CHIP	56PF	5%	50V
C416	1-163-035-00	CERAMIC CHIP	0.047MF		50V
C417	1-163-035-00	CERAMIC CHIP	0.047MF		50V
C418	1-163-035-00	CERAMIC CHIP	0.047MF		50V
C419	1-124-638-11	ELECT	22MF	20%	6.3V
C420	1-163-035-00	CERAMIC CHIP	0.047MF		50V
C421	1-124-438-00	ELECT	1MF	20%	50V
C422	1-163-009-11	CERAMIC CHIP	0.001MF	10%	50V
C423	1-163-133-00	CERAMIC CHIP	470PF	10%	50V
C424	1-163-035-00	CERAMIC CHIP	0.047MF		50V
C425	1-163-035-00	CERAMIC CHIP	0.047MF		50V

CONNECTOR

CN401	*1-564-785-11	PIN, CONNECTOR	7P
CN402	*1-564-784-11	PIN, CONNECTOR	6P

DIODE

D401	8-719-801-41	DIODE 1SS196
D402	8-719-801-41	DIODE 1SS196
D403	8-719-100-05	DIODE 1S2837
D405	8-719-800-76	DIODE 1SS123

When indicating parts by reference number, please include the board name.

No.	Part No.	Description				Remark
		COIL				
L401	1-408-972-21	INDUCTOR	15UH			
L402	1-408-972-21	INDUCTOR	15UH			
L403	1-408-982-11	INDUCTOR	100UH			
L404	1-408-979-21	INDUCTOR	56UH			
		TRANSISTOR				
Q401	8-729-100-66	TRANSISTOR 2SC1623				
Q402	8-729-100-66	TRANSISTOR 2SC1623				
Q403	8-729-100-66	TRANSISTOR 2SC1623				
Q404	8-729-901-01	TRANSISTOR DTC144EK				
Q405	8-729-100-76	TRANSISTOR 2SA812				
Q406	8-729-901-04	TRANSISTOR DTA114EK				
Q407	8-729-100-66	TRANSISTOR 2SC1623				
Q418	8-729-901-01	TRANSISTOR DTC144EK				
Q419	8-729-901-01	TRANSISTOR DTC144EK				
Q420	8-729-100-66	TRANSISTOR 2SC1623				
Q422	8-729-100-66	TRANSISTOR 2SC1623				
Q423	8-729-901-01	TRANSISTOR DTC144EK				
Q424	8-729-901-01	TRANSISTOR DTC144EK				
Q425	8-729-901-06	TRANSISTOR DTA144EK				
Q426	8-729-901-06	TRANSISTOR DTA144EK				
Q427	8-729-901-06	TRANSISTOR DTA144EK				
Q428	8-729-901-06	TRANSISTOR DTA144EK				
Q429	8-729-100-66	TRANSISTOR 2SC1623				
		RESISTOR				
R401	1-216-041-00	METAL GLAZE	470	5%	1/10W	
R402	1-216-037-00	METAL GLAZE	330	5%	1/10W	
R403	1-216-105-00	METAL GLAZE	220K	5%	1/10W	
R404	1-216-105-00	METAL GLAZE	220K	5%	1/10W	
R405	1-216-041-00	METAL GLAZE	470	5%	1/10W	
R406	1-216-037-00	METAL GLAZE	330	5%	1/10W	
R407	1-216-041-00	METAL GLAZE	470	5%	1/10W	
R408	1-216-049-00	METAL GLAZE	1K	5%	1/10W	
R409	1-216-045-00	METAL GLAZE	680	5%	1/10W	
R410	1-216-039-00	METAL GLAZE	390	5%	1/10W	
R411	1-216-075-00	METAL GLAZE	12K	5%	1/10W	
R412	1-216-081-00	METAL GLAZE	22K	5%	1/10W	
R413	1-216-039-00	METAL GLAZE	390	5%	1/10W	
R414	1-216-073-00	METAL GLAZE	10K	5%	1/10W	
R415	1-216-073-00	METAL GLAZE	10K	5%	1/10W	
R416	1-216-065-00	METAL GLAZE	4.7K	5%	1/10W	
R417	1-216-295-00	METAL GLAZE	0	5%	1/10W	
R436	1-216-063-00	METAL GLAZE	3.9K	5%	1/10W	
R437	1-216-059-00	METAL GLAZE	2.7K	5%	1/10W	
R438	1-216-081-00	METAL GLAZE	22K	5%	1/10W	
R439	1-216-083-00	METAL GLAZE	27K	5%	1/10W	
R440	1-216-037-00	METAL GLAZE	330	5%	1/10W	
R441	1-216-041-00	METAL GLAZE	470	5%	1/10W	
R442	1-216-039-00	METAL GLAZE	390	5%	1/10W	
R444	1-216-049-00	METAL GLAZE	1K	5%	1/10W	
R445	1-216-049-00	METAL GLAZE	1K	5%	1/10W	
R446	1-216-057-00	METAL GLAZE	2.2K	5%	1/10W	
R447	1-216-031-00	METAL GLAZE	180	5%	1/10W	
R448	1-216-051-00	METAL GLAZE	1.2K	5%	1/10W	
R449	1-216-092-00	METAL GLAZE	62K	5%	1/10W	
R450	1-216-059-00	METAL GLAZE	2.7K	5%	1/10W	
R451	1-216-053-00	METAL GLAZE	1.5K	5%	1/10W	
R452	1-216-055-00	METAL GLAZE	1.8K	5%	1/10W	
R453	1-216-073-00	METAL GLAZE	10K	5%	1/10W	
R457	1-216-041-00	METAL GLAZE	470	5%	1/10W	
R458	1-216-049-00	METAL GLAZE	1K	5%	1/10W	
R459	1-216-061-00	METAL GLAZE	3.3K	5%	1/10W	

****

*1-621-987-11 CB-8 BOARD
****

CONNECTOR

CN001	1-506-471-11	PIN, CONNECTOR 6P	
CN002	1-506-472-11	PIN, CONNECTOR 7P	

DIODE

D001	8-719-106-22	DIODE RD7.5M-B1	
D002	8-719-106-22	DIODE RD7.5M-B1	
D003	8-719-106-22	DIODE RD7.5M-B1	
D004	8-719-106-22	DIODE RD7.5M-B1	
D005	8-719-106-22	DIODE RD7.5M-B1	
D006	8-719-106-22	DIODE RD7.5M-B1	

RESISTOR

R001	1-216-037-00	METAL GLAZE	330	5%	1/10W	
R002	1-216-037-00	METAL GLAZE	330	5%	1/10W	
R003	1-216-037-00	METAL GLAZE	330	5%	1/10W	
R004	1-216-037-00	METAL GLAZE	330	5%	1/10W	
R005	1-216-037-00	METAL GLAZE	330	5%	1/10W	
R006	1-216-037-00	METAL GLAZE	330	5%	1/10W	

****

*1-629-042-11 IO-16 BOARD
****

JACK

J601	1-507-792-00	JACK (CONTROL S IN)
J602	1-507-792-00	JACK (CONTROL S OUT)

RESISTOR

R601	1-216-025-00	METAL GLAZE	100	5%	1/10W	
R602	1-216-025-00	METAL GLAZE	100	5%	1/10W	
R603	1-216-001-00	METAL GLAZE	10	5%	1/10W	

****

When indicating parts by reference number, please include the board name.

IO-17 FR-39 MJ-11

No.	Part No.	Description			Remark
	*A-7061-497-B	IO-17 BOARD, COMPLETE			
		**********			
		CAPACITOR			
C701	1-163-117-00	CERAMIC CHIP 100PF	5%	50V	
C702	1-163-117-00	CERAMIC CHIP 100PF	5%	50V	
C703	1-163-021-00	CERAMIC CHIP 0.01MF		50V	
C704	1-163-021-00	CERAMIC CHIP 0.01MF		50V	
C705	1-162-637-11	CERAMIC CHIP 0.47MF		16V	
C706	1-162-637-11	CERAMIC CHIP 0.47MF		16V	
C707	1-162-637-11	CERAMIC CHIP 0.47MF		16V	
C708	1-162-637-11	CERAMIC CHIP 0.47MF		16V	
		JACK			
CNJ701	1-537-115-11	TERMINAL BOARD (LINE IN 1)			
CNJ702	1-568-212-11	JACK 3P (LINE IN 2)			
CNJ703	1-537-115-21	TERMINAL BOARD (LINE OUT 1)			
CNJ704	1-568-212-11	JACK 3P (LINE OUT 2)			
		DIODE			
D701	8-719-106-22	DIODE RD7.5M-B1			
D702	8-719-106-22	DIODE RD7.5M-B1			
D703	8-719-106-22	DIODE RD7.5M-B1			
D704	8-719-106-22	DIODE RD7.5M-B1			
D705	8-719-106-22	DIODE RD7.5M-B1			
D706	8-719-106-22	DIODE RD7.5M-B1			
D707	8-719-106-22	DIODE RD7.5M-B1			
D708	8-719-106-22	DIODE RD7.5M-B1			
D709	8-719-106-22	DIODE RD7.5M-B1			
D710	8-719-106-22	DIODE RD7.5M-B1			
D711	8-719-106-22	DIODE RD7.5M-B1			
D712	8-719-106-22	DIODE RD7.5M-B1			
D713	8-719-106-22	DIODE RD7.5M-B1			
D714	8-719-106-22	DIODE RD7.5M-B1			
D715	8-719-107-15	DIODE RD18M-B2			
D716	8-719-107-15	DIODE RD18M-B2			
D717	8-719-106-71	DIODE RD12M-B2			
D718	8-719-106-71	DIODE RD12M-B2			
D719	8-719-106-71	DIODE RD12M-B2			
		IC			
IC701	8-759-200-81	IC TC4053BF			
IC702	8-759-100-95	IC UPC324G2			
		JACK			
J701	1-562-589-11	SOCKET, DIN (SMALL TYPE) 5P (CONTROL L)			
		RESISTOR			
R701	1-216-015-00	METAL GLAZE	39	5% 1/10W	
R702	1-216-015-00	METAL GLAZE	39	5% 1/10W	
R703	1-216-015-00	METAL GLAZE	39	5% 1/10W	
R704	1-216-015-00	METAL GLAZE	39	5% 1/10W	
R705	1-216-015-00	METAL GLAZE	39	5% 1/10W	
R706	1-216-015-00	METAL GLAZE	39	5% 1/10W	
R707	1-216-025-00	METAL GLAZE	100	5% 1/10W	
R708	1-216-069-00	METAL GLAZE	6.8K	5% 1/10W	
R709	1-216-069-00	METAL GLAZE	6.8K	5% 1/10W	
R710	1-216-069-00	METAL GLAZE	6.8K	5% 1/10W	
R711	1-216-069-00	METAL GLAZE	6.8K	5% 1/10W	
R712	1-216-089-00	METAL GLAZE	47K	5% 1/10W	
R713	1-216-089-00	METAL GLAZE	47K	5% 1/10W	
R714	1-216-089-00	METAL GLAZE	47K	5% 1/10W	
R715	1-216-089-00	METAL GLAZE	47K	5% 1/10W	
R716	1-216-055-00	METAL GLAZE	1.8K	5% 1/10W	
R717	1-216-055-00	METAL GLAZE	1.8K	5% 1/10W	
R718	1-216-055-00	METAL GLAZE	1.8K	5% 1/10W	
R719	1-216-055-00	METAL GLAZE	1.8K	5% 1/10W	
R721	1-216-021-00	METAL GLAZE	68	5% 1/10W	
R722	1-216-021-00	METAL GLAZE	68	5% 1/10W	
R723	1-216-021-00	METAL GLAZE	68	5% 1/10W	
R724	1-216-021-00	METAL GLAZE	68	5% 1/10W	
R725	1-216-025-00	METAL GLAZE	100	5% 1/10W	
R726	1-216-089-00	METAL GLAZE	47K	5% 1/10W	
R727	1-216-057-00	METAL GLAZE	2.2K	5% 1/10W	
R728	1-216-069-00	METAL GLAZE	6.8K	5% 1/10W	
R730	1-216-295-00	METAL GLAZE	0	5% 1/10W	
		SWITCH			
S701	1-554-377-51	SWITCH, SLIDE (DIGITAL MULTI)			
S702	1-554-377-51	SWITCH, SLIDE (CONTROL L)			
		**********			
	*1-629-041-11	FR-39 BOARD			
		**********			
	*3-697-607-01	HOLDER (SU), LED			
		DIODE			
D101	8-719-812-32	DIODE TLY123			
D102	8-719-920-05	DIODE SLP281C-50			
D103	8-719-920-05	DIODE SLP281C-50			
		**********			
	*A-7061-499-A	MJ-11 BOARD, COMPLETE			
		**********			
		CAPACITOR			
C725	1-126-157-11	ELECT	10MF	20% 16V	
C726	1-126-157-11	ELECT	10MF	20% 16V	
C731	1-126-157-11	ELECT	10MF	20% 16V	
C732	1-124-225-00	ELECT	100MF	20% 6.3V	
C733	1-163-009-11	CERAMIC CHIP	0.001MF	10% 50V	
C734	1-163-121-00	CERAMIC CHIP	150PF	5% 50V	
C741	1-126-157-11	ELECT	10MF	20% 16V	
C742	1-124-225-00	ELECT	100MF	20% 6.3V	
C743	1-163-009-11	CERAMIC CHIP	0.001MF	10% 50V	

When indicating parts by reference number, please include the board name.

No.	Part No.	Description			Remark
C744	1-163-121-00	CERAMIC CHIP 150PF		5%	50V
		DIODE			
D101	8-719-109-59	DIODE RD2.7ES-B1			
		IC			
IC721	8-759-745-64	IC NJM4560M-T1			
		JACK			
J301	1-507-899-00	JACK (SMALL TYPE) (MIC L)			
J401	1-507-899-00	JACK (SMALL TYPE) (MIC R)			
		JUMPER RESISTOR			
JR048	1-216-295-00	METAL GLAZE	0	5%	1/10W
JR049	1-216-295-00	METAL GLAZE	0	5%	1/10W
JR050	1-216-295-00	METAL GLAZE	0	5%	1/10W
JR051	1-216-295-00	METAL GLAZE	0	5%	1/10W
JR052	1-216-295-00	METAL GLAZE	0	5%	1/10W
JR071	1-216-296-00	METAL GLAZE	0	5%	1/8W
		RESISTOR			
R710	1-216-061-00	METAL GLAZE	3.3K	5%	1/10W
R731	1-216-105-00	METAL GLAZE	220K	5%	1/10W
R732	1-216-081-00	METAL GLAZE	22K	5%	1/10W
R733	1-216-025-00	METAL GLAZE	100	5%	1/10W
R734	1-216-025-00	METAL GLAZE	100	5%	1/10W
R735	1-216-083-00	METAL GLAZE	27K	5%	1/10W
R741	1-216-105-00	METAL GLAZE	220K	5%	1/10W
R742	1-216-081-00	METAL GLAZE	22K	5%	1/10W
R743	1-216-025-00	METAL GLAZE	100	5%	1/10W
R744	1-216-025-00	METAL GLAZE	100	5%	1/10W
R745	1-216-083-00	METAL GLAZE	27K	5%	1/10W

****

*A-7061-543-A RS-17 BOARD, COMPLETE
****

3-712-410-01 HOLDER, RS

		CAPACITOR			
C001	1-163-038-00	CERAMIC CHIP	0.1MF		25V
C002	1-124-465-00	ELECT	0.47MF	20%	50V
C003	1-124-464-11	ELECT	0.22MF	20%	50V
C004	1-163-038-00	CERAMIC CHIP	0.1MF		25V
C005	1-163-021-00	CERAMIC CHIP	0.01MF	10%	50V
C006	1-163-021-00	CERAMIC CHIP	0.01MF	10%	50V
		CONNECTOR			
CN002	1-506-469-11	PIN, CONNECTOR 4P			
CN003	*1-506-469-11	PIN, CONNECTOR 4P			
CN004	*1-506-467-11	PIN, CONNECTOR 2P			
CN005	1-506-467-11	PIN, CONNECTOR 2P			
CN006	*1-506-467-11	PIN, CONNECTOR 2P			
		IC			
IC001	8-759-107-68	IC CX20115A			
IC002	8-759-100-93	IC UPC393G2			
		TRANSISTOR			
PH001	8-719-939-11	GP2S09-B			
PH002	8-719-939-11	GP2S09-B			
PH003	8-719-939-11	GP2S09-B			
		TRANSISTOR			
Q001	8-729-901-01	TRANSISTOR DTC144EK			
Q002	8-729-901-01	TRANSISTOR DTC144EK			
Q003	8-729-901-01	TRANSISTOR DTC144EK			
Q004	8-729-903-97	TRANSISTOR FMS1FE			
Q005	8-729-903-82	TRANSISTOR FMW2			
		RESISTOR			
R001	1-216-081-00	METAL GLAZE	22K	5%	1/10W
R002	1-216-055-00	METAL GLAZE	1.8K	5%	1/10W
R003	1-216-031-00	METAL GLAZE	180	5%	1/10W
R004	1-216-174-00	METAL GLAZE	100	5%	1/8W
R005	1-216-089-00	METAL GLAZE	47K	5%	1/10W
R006	1-216-089-00	METAL GLAZE	47K	5%	1/10W
R007	1-216-089-00	METAL GLAZE	47K	5%	1/10W
R008	1-216-073-00	METAL GLAZE	10K	5%	1/10W
R009	1-216-073-00	METAL GLAZE	10K	5%	1/10W
R010	1-216-073-00	METAL GLAZE	10K	5%	1/10W
R011	1-216-073-00	METAL GLAZE	10K	5%	1/10W
R012	1-216-073-00	METAL GLAZE	10K	5%	1/10W
R013	1-216-107-00	METAL GLAZE	270K	5%	1/10W
R014	1-216-073-00	METAL GLAZE	10K	5%	1/10W
R015	1-216-107-00	METAL GLAZE	270K	5%	1/10W
R016	1-216-073-00	METAL GLAZE	10K	5%	1/10W
R017	1-216-073-00	METAL GLAZE	10K	5%	1/10W
R018	1-216-107-00	METAL GLAZE	270K	5%	1/10W
R019	1-216-073-00	METAL GLAZE	10K	5%	1/10W
R020	1-216-107-00	METAL GLAZE	270K	5%	1/10W
R021	1-216-296-00	METAL GLAZE	0	5%	1/8W
		THERMISTOR			
THP001	1-202-854-00	THERMISTOR (POSITIVE)			

****

When indicating parts by reference number, please include the board name.

No.	Part No.	Description	Remark
	*A-7061-589-A	DR-35 BOARD, COMPLETE **********	
	7-685-646-79	SCREW +BVTP 3X8 TYPE2 IT-3	
		CAPACITOR	
C201	1-126-160-11	ELECT 1MF 20% 50V	
C202	1-163-021-00	CERAMIC CHIP 0.01MF 10% 50V	
C203	1-163-038-00	CERAMIC CHIP 0.1MF 25V	
C204	1-163-038-00	CERAMIC CHIP 0.1MF 25V	
C205	1-126-103-11	ELECT 470MF 20% 16V	
C207	1-126-335-11	ELECT 220MF 20% 6.3V	
C208	1-163-038-00	CERAMIC CHIP 0.1MF 25V	
C209	1-126-335-11	ELECT 220MF 20% 6.3V	
C210	1-163-038-00	CERAMIC CHIP 0.1MF 25V	
C211	1-163-017-00	CERAMIC CHIP 0.0047MF 10% 50V	
C212	1-124-255-11	ELECT 1MF 20% 50V	
C213	1-163-038-00	CERAMIC CHIP 0.1MF 25V	
C214	1-126-103-11	ELECT 470MF 20% 16V	
C216	1-123-333-00	ELECT 100MF 20% 16V	
C217	1-163-038-00	CERAMIC CHIP 0.1MF 25V	
C218	1-163-021-00	CERAMIC CHIP 0.01MF 10% 50V	
C219	1-163-139-00	CERAMIC CHIP 820PF 5% 50V	
C220	1-163-038-00	CERAMIC CHIP 0.1MF 25V	
C221	1-163-038-00	CERAMIC CHIP 0.1MF 25V	
C223	1-126-335-11	ELECT 220MF 20% 10V	
C224	1-163-038-00	CERAMIC CHIP 0.1MF 25V	
C225	1-126-103-11	ELECT 470MF 20% 16V	
C226	1-163-038-00	CERAMIC CHIP 0.1MF 25V	
C227	1-123-336-00	ELECT 470MF 20% 25V	
C228	1-163-038-00	CERAMIC CHIP 0.1MF 25V	
C229	1-163-038-00	CERAMIC CHIP 0.1MF 25V	
C230	1-163-038-00	CERAMIC CHIP 0.1MF 25V	
C231	1-126-168-11	ELECT 1000MF 20% 6.3V	
C232	1-126-168-11	ELECT 1000MF 20% 6.3V	
C233	1-126-103-11	ELECT 470MF 20% 16V	
C235	1-163-038-00	CERAMIC CHIP 0.1MF 25V	
C240	1-126-101-11	ELECT 100MF 20% 6.3V	
C241	1-126-335-11	ELECT 220MF 20% 6.3V	
		CONNECTOR	
CN201	*1-560-892-00	PIN, CONNECTOR 4P	
CN202	*1-560-895-00	PIN, CONNECTOR 7P	
CN203	*1-560-894-00	PIN, CONNECTOR 6P	
CN204	*1-560-890-00	PIN, CONNECTOR 2P	
		DIODE	
D201	9-982-928-00	DIODE 31DQ06	
D202	9-982-928-00	DIODE 31DQ06	
D203	9-982-928-00	DIODE 31DQ06	
D204	8-719-100-03	DIODE 1S2835	
D205	⚠ 8-719-110-02	DIODE RD7.5ESB1	

No.	Part No.	Description	Remark
		IC	
IC201	8-759-937-36	IC TL1451ACNS	
IC202	8-759-937-36	IC TL1451ACNS	
		JUMPER RESAISTOR	
JR001	1-216-296-00	METAL GLAZE 0 5% 1/8W	
JR002	1-216-296-00	METAL GLAZE 0 5% 1/8W	
JR003	1-216-296-00	METAL GLAZE 0 5% 1/8W	
JR004	1-216-296-00	METAL GLAZE 0 5% 1/8W	
JR005	1-216-296-00	METAL GLAZE 0 5% 1/8W	
JR006	1-216-296-00	METAL GLAZE 0 5% 1/8W	
JR007	1-216-296-00	METAL GLAZE 0 5% 1/8W	
JR008	1-216-296-00	METAL GLAZE 0 5% 1/8W	
JR009	1-216-296-00	METAL GLAZE 0 5% 1/8W	
JR010	1-216-296-00	METAL GLAZE 0 5% 1/8W	
JR011	1-216-296-00	METAL GLAZE 0 5% 1/8W	
JR012	1-216-296-00	METAL GLAZE 0 5% 1/8W	
JR013	1-216-296-00	METAL GLAZE 0 5% 1/8W	
JR014	1-216-296-00	METAL GLAZE 0 5% 1/8W	
JR015	1-216-296-00	METAL GLAZE 0 5% 1/8W	
JR016	1-216-296-00	METAL GLAZE 0 5% 1/8W	
JR017	1-216-296-00	METAL GLAZE 0 5% 1/8W	
JR018	1-216-296-00	METAL GLAZE 0 5% 1/8W	
JR019	1-216-296-00	METAL GLAZE 0 5% 1/8W	
JR020	1-216-296-00	METAL GLAZE 0 5% 1/8W	
JR021	1-216-296-00	METAL GLAZE 0 5% 1/8W	
JR022	1-216-295-00	METAL GLAZE 0 5% 1/10W	
JR023	1-216-295-00	METAL GLAZE 0 5% 1/10W	
JR024	1-216-295-00	METAL GLAZE 0 5% 1/10W	
JR025	1-216-295-00	METAL GLAZE 0 5% 1/10W	
JR026	1-216-295-00	METAL GLAZE 0 5% 1/10W	
JR027	1-216-295-00	METAL GLAZE 0 5% 1/10W	
JR028	1-216-295-00	METAL GLAZE 0 5% 1/10W	
JR029	1-216-295-00	METAL GLAZE 0 5% 1/10W	
JR030	1-216-295-00	METAL GLAZE 0 5% 1/10W	
		COIL	
L201	1-408-945-00	COIL, CHOKE	
L202	1-408-944-00	COIL, CHOKE 20UH	
L203	1-408-944-00	COIL, CHOKE 20UH	
L205	1-408-944-00	COIL, CHOKE 20UH	
L206	1-408-945-00	COIL, CHOKE 200UH	
L207	1-408-944-00	COIL, CHOKE 20UH	
L208	1-408-944-00	COIL, CHOKE 20UH	
L209	1-408-944-00	COIL, CHOKE 20UH	
L210	1-408-944-00	COIL, CHOKE 20UH	
L211	1-408-944-00	COIL, CHOKE 20UH	
L264	1-408-945-00	COIL, CHOKE 200UH	
		IC LINK	
PS202	⚠ 1-532-637-21	LINK, IC (1A)	

The components identified by mark ⚠ or dotted line with mark ⚠ are critical for safety.
Replace only with part number specified.

Les composants identifiés par une marque ⚠ sont critiques pour la sécurité.
Ne les remplacer que par une pièce portant le numéro spécifé.

When indicating parts by reference number, please include the board name.

No.	Part No.	Description				Remark
		TRANSISTOR				
Q201 ⚠	8-729-112-61	TRANSISTOR 2SA1441				
Q202	8-729-100-66	TRANSISTOR 2SC1623				
Q203 ⚠	8-729-216-22	TRANSISTOR 2SA1162				
Q204	8-729-113-33	TRANSISTOR 2SB733-4				
Q205 ⚠	8-729-112-61	TRANSISTOR 2SA1441				
Q206	8-729-100-66	TRANSISTOR 2SC1623				
Q207	8-729-216-22	TRANSISTOR 2SA1162				
Q208	8-729-901-01	TRANSISTOR DTC144EK				
Q209 ⚠	8-729-112-61	TRANSISTOR 2SA1441				
Q210	8-729-100-66	TRANSISTOR 2SC1623				
Q211	8-729-216-22	TRANSISTOR 2SA1162				
Q212	8-729-901-01	TRANSISTOR DTC144EK				
Q213	8-729-901-01	TRANSISTOR DTC144EK				
Q214	8-729-901-01	TRANSISTOR DTC144EK				
		RESISTOR				
R201	1-216-085-00	METAL GLAZE	33K	5%	1/10W	
R202	1-216-085-00	METAL GLAZE	33K	5%	1/10W	
R203	1-216-115-00	METAL GLAZE	560K	5%	1/10W	
R204	1-249-413-11	CARBON	470	5%	1/4W	
R205	1-216-055-00	METAL GLAZE	1.8K	5%	1/10W	
R206	1-216-055-00	METAL GLAZE	1.8K	5%	1/10W	
R207	1-216-051-00	METAL GLAZE	1.2K	5%	1/10W	
R208	1-216-095-00	METAL GLAZE	82K	5%	1/10W	
R210	1-216-065-00	METAL GLAZE	4.7K	5%	1/10W	
R211	1-216-033-00	METAL GLAZE	220	5%	1/10W	
R212	1-216-687-11	METAL CHIP	33K	0.50%	1/10W	
R213	1-216-687-11	METAL CHIP	33K	0.50%	1/10W	
R214	1-216-115-00	METAL GLAZE	560K	5%	1/10W	
R215	1-249-413-11	CARBON	470	5%	1/4W	
R216	1-216-055-00	METAL GLAZE	1.8K	5%	1/10W	
R217	1-216-055-00	METAL GLAZE	1.8K	5%	1/10W	
R218	1-216-051-00	METAL GLAZE	1.2K	5%	1/10W	
R219	1-216-699-11	METAL CHIP	100K	0.50%	1/10W	
R220	1-216-679-11	METAL CHIP	15K	0.50%	1/10W	
R221	1-216-085-00	METAL GLAZE	33K	5%	1/10W	
R222	1-216-085-00	METAL GLAZE	33K	5%	1/10W	
R223	1-216-067-00	METAL GLAZE	5.6K	5%	1/10W	
R224	1-216-115-00	METAL GLAZE	560K	5%	1/10W	
R225	1-216-055-00	METAL GLAZE	1.8K	5%	1/10W	
R226	1-216-055-00	METAL GLAZE	1.8K	5%	1/10W	
R227	1-216-065-00	METAL GLAZE	4.7K	5%	1/10W	
R228	1-216-099-00	METAL GLAZE	120K	5%	1/10W	
R229	1-216-077-00	METAL GLAZE	15K	5%	1/10W	
R230	1-216-081-00	METAL GLAZE	22K	5%	1/10W	
R232	1-216-055-00	METAL GLAZE	1.8K	5%	1/10W	
R233	1-216-091-00	METAL GLAZE	56K	5%	1/10W	
		VARIABLE RESISTOR				
RV201	1-226-703-11	RES, ADJ, METAL GLAZE 10K				
RV202	1-226-703-11	RES, ADJ, METAL GLAZE 10K				
RV203	1-226-703-11	RES, ADJ, METAL GLAZE 10K				

****

	*A-7061-674-A	FT-37 BOARD, COMPLETE **********				
	1-519-410-11	INDICATOR TUBE, FLUORESCENT				
	*3-689-521-01	HOLDER, LED, ROUND				
	3-691-611-11	KNOB (S), CONTROL				
	*3-695-988-01	HOLDER (RE), LED				
	*3-697-607-01	HOLDER (SU), LED				
	*3-716-870-01	HOLDER (LEFT), INDICATION TUBE				
	*3-716-871-01	HOLDER(RIGHT), INDICATION TUBE				
	*3-722-112-01	HOLDER, LED, 2 GANG				
		CAPACITOR				
C001	1-162-637-11	CERAMIC CHIP	0.47MF			16V
C003	1-163-093-00	CERAMIC CHIP	10PF	5%		50V
C004	1-163-117-00	CERAMIC CHIP	100PF	5%		50V
C005	1-163-117-00	CERAMIC CHIP	100PF	5%		50V
C006	1-163-021-00	CERAMIC CHIP	0.01MF			50V
C009	1-163-021-00	CERAMIC CHIP	0.01MF			50V
C010	1-126-162-11	ELECT	3.3MF	20%		50V
C011	1-163-097-00	CERAMIC CHIP	15PF	5%		50V
C012	1-163-101-00	CERAMIC CHIP	22PF	5%		50V
C013	1-163-021-00	CERAMIC CHIP	0.01MF			50V
C014	1-163-021-00	CERAMIC CHIP	0.01MF			50V
C015	1-126-160-11	ELECT	1MF	20%		50V
C016	1-126-157-11	ELECT	10MF	20%		16V
C017	1-163-021-00	CERAMIC CHIP	0.01MF			50V
C018	1-163-021-00	CERAMIC CHIP	0.01MF			50V
C019	1-126-157-11	ELECT	10MF	20%		16V
C020	1-163-035-00	CERAMIC CHIP	0.047MF			50V
		CONNECTOR				
CN011	1-506-467-11	PIN, CONNECTOR 2P				
		TRIMMER				
CV001	1-141-291-11	CAP, TRIMMER				
		DIODE				
D001	8-719-100-03	DIODE 1S2835				
D002	8-719-100-03	DIODE 1S2835				
D003	8-719-100-03	DIODE 1S2835				
D004	8-719-100-03	DIODE 1S2835				
D005	8-719-100-03	DIODE 1S2835				
D006	8-719-100-03	DIODE 1S2835				
D007	8-719-100-03	DIODE 1S2835				
D008	8-719-100-03	DIODE 1S2835				
D009	8-719-100-03	DIODE 1S2835				
D010	8-719-100-03	DIODE 1S2835				
D011	8-719-100-03	DIODE 1S2835				

The components identified by mark ⚠ or dotted line with mark ⚠ are critical for safety.
Replace only with part number specified.

Les composants identifiés par une marque ⚠ sont critiques pour la sécurité.
Ne les remplacer que par une pièce portant le numéro spécifé.

When indicating parts by reference number, please include the board name.

No.	Part No.	Description	Remark
D012	8-719-100-03	DIODE 1S2835	
D013	8-719-100-03	DIODE 1S2835	
D014	8-719-100-03	DIODE 1S2835	
D018	8-719-100-03	DIODE 1S2835	
D019	8-719-100-03	DIODE 1S2835	
D021	8-719-812-32	DIODE TLY123	
D024	8-719-106-43	DIODE RD9.1M-B1	
D025	8-719-100-03	DIODE 1S2835	
D026	8-719-100-03	DIODE 1S2835	
D028	8-719-106-22	DIODE RD7.5M-B1	
D029	8-719-106-22	DIODE RD7.5M-B1	
D030	8-719-106-22	DIODE RD7.5M-B1	
D032	8-719-812-32	DIODE TLY123	
D033	8-719-812-32	DIODE TLY123	
D034	8-719-812-32	DIODE TLY123	
D035	8-719-920-05	DIODE SLP281C-50	
D036	8-719-920-05	DIODE SLP281C-50	
D037	8-719-812-31	DIODE TLR123	
D038	8-719-812-31	DIODE TLR123	
D039	8-719-812-31	DIODE TLR123	
D040	8-719-918-96	DIODE AA3422S	
D041	8-719-918-96	DIODE AA3422S	
D042	8-719-812-32	DIODE TLY123	
D043	8-719-920-05	DIODE SLP281C-50	
D044	8-719-812-31	DIODE TLR123	
D045	8-719-918-96	DIODE AA3422S	
		IC	
IC001	8-759-111-97	IC UPD75208G-527-1B	
IC002⚠	8-752-804-35	IC CXP5016-253Q	
IC003	8-759-604-09	IC M51955BL	
IC004	8-759-200-82	IC TC4069UBF	
IC005	8-759-111-66	IC UPD7566G-505	
IC006	8-759-937-21	IC CXD1078M	
IC007	8-759-205-78	IC TC504013BF	
		TRANSISTOR	
Q001	8-729-162-43	TRANSISTOR 2SB624-BV3	
Q002	8-729-901-01	TRANSISTOR DTC144EK	
		RESISTOR	
R002	1-216-073-00	METAL GLAZE 10K 5% 1/10W	
R003	1-216-073-00	METAL GLAZE 10K 5% 1/10W	
R004	1-216-097-00	METAL GLAZE 100K 5% 1/10W	
R005	1-216-097-00	METAL GLAZE 100K 5% 1/10W	
R006	1-216-073-00	METAL GLAZE 10K 5% 1/10W	
R007	1-216-081-00	METAL GLAZE 22K 5% 1/10W	
R008	1-216-081-00	METAL GLAZE 22K 5% 1/10W	
R009	1-216-093-00	METAL GLAZE 68K 5% 1/10W	
R010	1-216-073-00	METAL GLAZE 10K 5% 1/10W	
R011	1-216-073-00	METAL GLAZE 10K 5% 1/10W	
R012	1-216-085-00	METAL GLAZE 33K 5% 1/10W	

No.	Part No.	Description	Remark
R013	1-216-081-00	METAL GLAZE 22K 5% 1/10W	
R014	1-216-097-00	METAL GLAZE 100K 5% 1/10W	
R015	1-216-097-00	METAL GLAZE 100K 5% 1/10W	
R016	1-216-097-00	METAL GLAZE 100K 5% 1/10W	
R017	1-216-073-00	METAL GLAZE 10K 5% 1/10W	
R018	1-216-113-00	METAL GLAZE 470K 5% 1/10W	
R019	1-216-113-00	METAL GLAZE 470K 5% 1/10W	
R020	1-216-113-00	METAL GLAZE 470K 5% 1/10W	
R021	1-216-069-00	METAL GLAZE 6.8K 5% 1/10W	
R022	1-216-073-00	METAL GLAZE 10K 5% 1/10W	
R023	1-216-073-00	METAL GLAZE 10K 5% 1/10W	
R024	1-216-073-00	METAL GLAZE 10K 5% 1/10W	
R025	1-216-073-00	METAL GLAZE 10K 5% 1/10W	
R026	1-216-073-00	METAL GLAZE 10K 5% 1/10W	
R028	1-216-073-00	METAL GLAZE 10K 5% 1/10W	
R029	1-216-065-00	METAL GLAZE 4.7K 5% 1/10W	
R030	1-216-037-00	METAL GLAZE 330 5% 1/10W	
R032	1-216-295-00	METAL GLAZE 0 5% 1/10W	
R034	1-216-073-00	METAL GLAZE 10K 5% 1/10W	
R037	1-216-097-00	METAL GLAZE 100K 5% 1/10W	
R039	1-216-085-00	METAL GLAZE 33K 5% 1/10W	
R040	1-216-085-00	METAL GLAZE 33K 5% 1/10W	
R041	1-216-097-00	METAL GLAZE 100K 5% 1/10W	
R042	1-216-097-00	METAL GLAZE 100K 5% 1/10W	
R043	1-216-097-00	METAL GLAZE 100K 5% 1/10W	
R044	1-216-097-00	METAL GLAZE 100K 5% 1/10W	
R045	1-216-097-00	METAL GLAZE 100K 5% 1/10W	
R052	1-216-041-00	METAL GLAZE 470 5% 1/10W	
R053	1-216-041-00	METAL GLAZE 470 5% 1/10W	
R055	1-216-037-00	METAL GLAZE 330 5% 1/10W	
R056	1-216-041-00	METAL GLAZE 470 5% 1/10W	
R057	1-216-041-00	METAL GLAZE 470 5% 1/10W	
R058	1-216-041-00	METAL GLAZE 470 5% 1/10W	
R059	1-216-041-00	METAL GLAZE 470 5% 1/10W	
R060	1-216-041-00	METAL GLAZE 470 5% 1/10W	
R061	1-216-097-00	METAL GLAZE 100K 5% 1/10W	
		VARIABLE RESISTOR	
RV001	1-237-219-11	RES, VAR, CARBON 1K	
		SWITCH	
SW002	1-570-854-11	SWITCH, SLIDE (AUDIO MONITOR)	
SW003	1-570-854-11	SWITCH, SLIDE (PCM MODE)	
SW004	1-554-174-00	SWITCH, KEY BOARD (REW)	
SW005	1-554-174-00	SWITCH, KEY BOARD (FF)	
SW006	1-554-174-00	SWITCH, KEY BOARD (STOP)	
SW007	1-554-174-00	SWITCH, KEY BOARD (PLAY)	
SW008	1-554-174-00	SWITCH, KEY BOARD (SYNCHRO EDIT)	
SW009	1-554-174-00	SWITCH, KEY BOARD (CHANNEL 1 TRACK/INDEX -)	
SW010	1-554-174-00	SWITCH, KEY BOARD (CHANNEL 1 TRACK/INDEX +)	
SW011	1-554-174-00	SWITCH, KEY BOARD (PAUSE/STILL)	

The components identified by mark ⚠ or dotted line with mark ⚠ are critical for safety.
Replace only with part number specified.

Les composants identifiés par une marque ⚠ sont critiques pour la sécurité.
Ne les remplacer que par une pièce portant le numéro spécifé.

When indicating parts by reference number, please include the board name.

No.	Part No.	Description	Remark
SW012	1-554-174-00	SWITCH, KEY BOARD (X2)	
SW013	1-554-174-00	SWITCH, KEY BOARD (AUDIO DUB)	
SW014	1-554-174-00	SWITCH, KEY BOARD (EDIT)	
SW015	1-554-174-00	SWITCH, KEY BOARD (INDEX)	
SW016	1-554-174-00	SWITCH, KEY BOARD (INDEX ERASE)	
SW017	1-554-174-00	SWITCH, KEY BOARD (INDEX MARK)	
SW018	1-554-174-00	SWITCH, KEY BOARD (TAPE RETURN)	
SW019	1-554-174-00	SWITCH, KEY BOARD (COUNTER REMAIN)	
SW020	1-554-174-00	SWITCH, KEY BOARD (OPEN/CLOSE)	
SW021	1-554-088-00	SWITCH, KEY BOARD (REC)	
SW022	1-554-174-00	SWITCH, KEY BOARD (STD AUDIO MAIN/SUB)	
SW023	1-554-174-00	SWITCH, KEY BOARD (TV/VTR)	
SW024	1-554-174-00	SWITCH, KEY BOARD (COUNTER RESET)	
SW025	1-570-865-11	SWITCH, SLIDE (LINE)	
SW026	1-570-865-11	SWITCH, SLIDE (Hi 8)	
		CRYSTAL	
X001	1-567-519-11	VIBRATOR, CRYSTAL (4.19MHz)	
X002	1-567-714-11	OSCILLATOR, CERAMIC (700KHz)	
X003	1-567-160-21	OSCILLATOR, CERAMIC (4.19MHz)	

****

*A-7061-727-A SP-7 BOARD, COMPLETE
****
(Including the DM-8 Board)

CAPACITOR

No.	Part No.	Description			
C001	1-123-875-11	ELECT	10MF	20%	50V
C002	1-163-038-00	CERAMIC CHIP	0.1MF		25V
C003	1-163-117-00	CERAMIC CHIP	100PF	5%	50V
C004	1-163-117-00	CERAMIC CHIP	100PF	5%	50V
C020	1-123-875-11	ELECT	10MF	20%	50V
C021	1-163-038-00	CERAMIC CHIP	0.1MF		25V
C022	1-163-038-00	CERAMIC CHIP	0.1MF		25V
C023	1-163-038-00	CERAMIC CHIP	0.1MF		25V
C024	1-163-038-00	CERAMIC CHIP	0.1MF		25V
C025	1-126-157-11	ELECT	10MF	20%	16V
C030	1-123-875-11	ELECT	10MF	20%	50V
C031	1-163-038-00	CERAMIC CHIP	0.1MF		25V
C032	1-163-093-00	CERAMIC CHIP	10PF	5%	50V
C033	1-163-093-00	CERAMIC CHIP	10PF	5%	50V
C050	1-163-038-00	CERAMIC CHIP	0.1MF		25V
C051	1-163-038-00	CERAMIC CHIP	0.1MF		25V
C080	1-163-101-00	CERAMIC CHIP	22PF	5%	50V
C081	1-163-101-00	CERAMIC CHIP	22PF	5%	50V
C082	1-131-345-00	TANTALUM	0.47MF	10%	35V
C083	1-124-261-00	ELECT	10MF	20%	50V
C084	1-163-038-00	CERAMIC CHIP	0.1MF		25V
C085	1-163-038-00	CERAMIC CHIP	0.1MF		25V
C086	1-163-038-00	CERAMIC CHIP	0.1MF		25V
C087	1-161-772-11	CERAMIC	0.1MF	10%	25V
C088	1-163-038-00	CERAMIC CHIP	0.1MF		25V
C120	1-163-038-00	CERAMIC CHIP	0.1MF		25V
C121	1-163-038-00	CERAMIC CHIP	0.1MF		25V
C122	1-163-117-00	CERAMIC CHIP	100PF	5%	50V
C123	1-163-117-00	CERAMIC CHIP	100PF	5%	50V
C201	1-163-017-00	CERAMIC CHIP	0.0047MF	10%	50V
C202	1-126-233-11	ELECT	22MF	20%	25V
C203	1-163-809-11	CERAMIC CHIP	0.047MF	10%	25V
C204	1-124-463-00	ELECT	0.1MF	20%	50V
C205	1-163-038-00	CERAMIC CHIP	0.1MF		25V
C206	1-126-151-11	ELECT	4.7MF	20%	16V
C207	1-163-038-00	CERAMIC CHIP	0.1MF		25V
C208	1-126-162-11	ELECT	3.3MF	20%	50V
C209	1-126-096-11	ELECT	10MF	20%	25V
C210	1-126-096-11	ELECT	10MF	20%	25V
C211	1-126-096-11	ELECT	10MF	20%	25V
C212	1-126-096-11	ELECT	10MF	20%	25V
C213	1-126-160-11	ELECT	1MF	20%	50V
C214	1-126-160-11	ELECT	1MF	20%	50V
C215	1-126-160-11	ELECT	1MF	20%	50V
C216	1-124-229-00	ELECT	33MF	20%	10V
C217	1-124-229-00	ELECT	33MF	20%	10V
C218	1-124-229-00	ELECT	33MF	20%	10V
C222	1-163-021-00	CERAMIC CHIP	0.01MF		50V
C223	1-163-021-00	CERAMIC CHIP	0.01MF		50V
C224	1-163-021-00	CERAMIC CHIP	0.01MF		50V
C225	1-163-021-00	CERAMIC CHIP	0.01MF		50V
C228	1-163-021-00	CERAMIC CHIP	0.01MF	10%	50V
C229	1-123-875-11	ELECT	10MF	20%	50V
C230	1-163-017-00	CERAMIC CHIP	0.0047MF	10%	50V
C231	1-163-017-00	CERAMIC CHIP	0.0047MF	10%	50V
C232	1-163-209-00	CERAMIC CHIP	0.0015MF	5%	50V
C233	1-163-209-00	CERAMIC CHIP	0.0015MF	5%	50V
C234	1-163-117-00	CERAMIC CHIP	100PF	5%	50V
C235	1-163-021-00	CERAMIC CHIP	0.01MF		50V
C236	1-163-019-00	CERAMIC CHIP	0.0068MF	10%	50V
C237	1-126-320-11	ELECT	10MF	20%	16V
C238	1-124-499-11	ELECT	1MF	20%	50V
C239	1-163-021-00	CERAMIC CHIP	0.01MF		50V
C240	1-163-037-11	CERAMIC CHIP	0.022MF	10%	25V
C241	1-163-037-11	CERAMIC CHIP	0.022MF	10%	25V
C242	1-163-017-00	CERAMIC CHIP	0.0047MF	10%	50V
C243	1-124-277-11	ELECT	4.7MF	20%	35V
C244	1-123-875-11	ELECT	10MF	20%	50V
C245	1-163-038-00	CERAMIC CHIP	0.1MF		25V
C246	1-163-809-11	CERAMIC CHIP	0.047MF	10%	25V
C247	1-124-767-00	ELECT	2.2MF	20%	50V
C248	1-163-021-00	CERAMIC CHIP	0.01MF		50V
C249	1-124-499-11	ELECT	1MF	20%	50V
C250	1-164-161-11	CERAMIC CHIP	0.0022MF	10%	50V
C251	1-163-809-11	CERAMIC CHIP	0.047MF	10%	25V
C255	1-124-443-00	ELECT	100MF	20%	6.3V
C256	1-124-443-00	ELECT	100MF	20%	6.3V
C257	1-124-927-11	ELECT	4.7MF	20%	50V
C258	1-124-925-11	ELECT	2.2MF	20%	50V

When indicating parts by reference number, please include the board name.

No.	Part No.	Description			Remark
C259	1-163-021-00	CERAMIC CHIP	0.01MF	10%	50V
C260	1-163-021-00	CERAMIC CHIP	0.01MF		50V
C261	1-163-809-11	CERAMIC CHIP	0.047MF	10%	25V
C262	1-163-809-11	CERAMIC CHIP	0.047MF	10%	25V
C264	1-163-109-00	CERAMIC CHIP	47PF	5%	50V
C470	1-130-497-00	MYLAR	0.15MF	10%	50V
C471	1-163-989-11	CERAMIC CHIP	0.033MF	10%	25V
C472	1-163-077-00	CERAMIC CHIP	0.1MF		50V
C473	1-162-587-91	CERAMIC CHIP	0.039MF	10%	25V
C485	1-130-495-00	MYLAR	0.1MF	5%	50V
C490	1-163-035-00	CERAMIC CHIP	0.047MF		50V
C491	1-126-162-11	ELECT	3.3MF	20%	50V
C492	1-163-035-00	CERAMIC CHIP	0.047MF		50V
C493	1-124-589-11	ELECT	47MF	20%	10V
C500	1-163-035-00	CERAMIC CHIP	0.047MF		50V
C501	1-163-035-00	CERAMIC CHIP	0.047MF		50V
C502	1-163-131-00	CERAMIC CHIP	390PF	10%	50V
C591	1-163-111-00	CERAMIC CHIP	56PF	5%	50V
C592	1-163-111-00	CERAMIC CHIP	56PF	5%	50V
C593	1-163-035-00	CERAMIC CHIP	0.047MF		50V
C594	1-163-131-00	CERAMIC CHIP	390PF	5%	50V
C595	1-163-021-00	CERAMIC CHIP	0.01MF		50V
C600	1-163-035-00	CERAMIC CHIP	0.047MF		50V
C601	1-163-809-11	CERAMIC CHIP	0.047MF	10%	25V
C602	1-126-157-11	ELECT	10MF	20%	16V
C603	1-163-035-00	CERAMIC CHIP	0.047MF		50V
C605	1-163-109-00	CERAMIC CHIP	47PF	5%	50V
C606	1-163-093-00	CERAMIC CHIP	10PF	5%	50V
C607	1-163-115-00	CERAMIC CHIP	82PF	5%	50V
C608	1-163-035-00	CERAMIC CHIP	0.047MF		50V
C609	1-163-035-00	CERAMIC CHIP	0.047MF		50V
C610	1-163-035-00	CERAMIC CHIP	0.047MF		50V
C611	1-126-157-11	ELECT	10MF	20%	16V
C612	1-163-035-00	CERAMIC CHIP	0.047MF		50V
C613	1-163-017-00	CERAMIC CHIP	0.0047MF	10%	50V
C614	1-126-157-11	ELECT	10MF	20%	16V
C615	1-163-035-00	CERAMIC CHIP	0.047MF		50V
C616	1-124-465-00	ELECT	0.47MF	20%	50V
C617	1-126-162-11	ELECT	3.3MF	20%	50V
C618	1-124-239-00	ELECT	6.8MF	20%	10V
C619	1-163-101-00	CERAMIC CHIP	22PF	5%	50V
C620	1-163-035-00	CERAMIC CHIP	0.047MF		50V
C624	1-163-085-00	CERAMIC CHIP	2PF	0.25PF	50V
C627	1-163-101-00	CERAMIC CHIP	22PF	5%	50V
C628	1-163-035-00	CERAMIC CHIP	0.047MF		50V
C629	1-126-157-11	ELECT	10MF	20%	16V
C630	1-163-035-00	CERAMIC CHIP	0.047MF		50V
C632	1-163-035-00	CERAMIC CHIP	0.047MF		50V
C633	1-126-157-11	ELECT	10MF	20%	16V
C635	1-126-157-11	ELECT	10MF	20%	16V
C636	1-163-035-00	CERAMIC CHIP	0.047MF		50V
C639	1-126-157-11	ELECT	10MF	20%	16V
C645	1-163-035-00	CERAMIC CHIP	0.047MF		50V
C646	1-163-035-00	CERAMIC CHIP	0.047MF		50V
C647	1-163-035-00	CERAMIC CHIP	0.047MF		50V
C648	1-163-035-00	CERAMIC CHIP	0.047MF		50V
C650	1-163-035-00	CERAMIC CHIP	0.047MF		50V
C654	1-163-035-00	CERAMIC CHIP	0.047MF		50V
C660	1-163-125-00	CERAMIC CHIP	220PF	5%	50V
C661	1-163-125-00	CERAMIC CHIP	220PF	5%	50V
C662	1-163-109-00	CERAMIC CHIP	47PF	5%	50V
C663	1-163-109-00	CERAMIC CHIP	47PF	5%	50V
C698	1-163-035-00	CERAMIC CHIP	0.047MF		50V
C701	1-163-021-00	CERAMIC CHIP	0.01MF	10%	50V
C702	1-163-809-11	CERAMIC CHIP	0.047MF	10%	25V
C703	1-163-141-00	CERAMIC CHIP	0.001MF	5%	50V
C705	1-163-037-11	CERAMIC CHIP	0.022MF	10%	25V
C706	1-163-037-11	CERAMIC CHIP	0.022MF	10%	25V
C707	1-126-233-11	ELECT	22MF	20%	25V
C708	1-163-017-00	CERAMIC CHIP	0.0047MF	10%	50V
C709	1-163-809-11	CERAMIC CHIP	0.047MF	10%	25V
C710	1-124-256-00	ELECT	1.5MF	20%	50V
C711	1-163-989-11	CERAMIC CHIP	0.033MF	10%	25V
C712	1-163-105-00	CERAMIC CHIP	33PF	5%	50V
C713	1-163-123-00	CERAMIC CHIP	180PF	5%	50V
C714	1-163-137-00	CERAMIC CHIP	680PF	5%	50V
C715	1-163-038-00	CERAMIC CHIP	0.1MF		25V
C716	1-163-038-00	CERAMIC CHIP	0.1MF		25V
C717	1-163-038-00	CERAMIC CHIP	0.1MF		25V
C718	1-163-021-00	CERAMIC CHIP	0.01MF		50V
C719	1-124-925-11	ELECT	2.2MF	20%	50V
C720	1-163-038-00	CERAMIC CHIP	0.1MF		25V
C721	1-163-145-00	CERAMIC CHIP	0.0015MF	5%	50V
C722	1-163-101-00	CERAMIC CHIP	22PF	5%	50V
C723	1-163-021-00	CERAMIC CHIP	0.01MF	10%	50V
C724	1-163-141-00	CERAMIC CHIP	0.001MF	5%	50V
C725	1-163-111-00	CERAMIC CHIP	56PF	5%	50V
C726	1-163-133-00	CERAMIC CHIP	470PF	5%	50V
C727	1-163-021-00	CERAMIC CHIP	0.01MF		50V
C728	1-124-257-00	ELECT	2.2MF	20%	50V
C730	1-163-131-00	CERAMIC CHIP	390PF	5%	50V
C731	1-163-111-00	CERAMIC CHIP	56PF	5%	50V
C734	1-163-135-00	CERAMIC CHIP	560PF	5%	50V
C735	1-163-809-11	CERAMIC CHIP	0.047MF	10%	25V
C736	1-163-021-00	CERAMIC CHIP	0.01MF	10%	50V
C740	1-124-925-11	ELECT	2.2MF	20%	50V
C770	1-163-035-00	CERAMIC CHIP	0.047MF		50V
C785	1-163-021-00	CERAMIC CHIP	0.01MF	10%	50V
C786	1-163-021-00	CERAMIC CHIP	0.01MF	10%	50V
C801	1-163-021-00	CERAMIC CHIP	0.01MF		50V
C802	1-163-021-00	CERAMIC CHIP	0.01MF		50V
C803	1-163-021-00	CERAMIC CHIP	0.01MF		50V
C804	1-163-021-00	CERAMIC CHIP	0.01MF		50V
C805	1-163-021-00	CERAMIC CHIP	0.01MF		50V
C806	1-163-021-00	CERAMIC CHIP	0.01MF		50V
C807	1-163-021-00	CERAMIC CHIP	0.01MF		50V

When indicating parts by reference number, please include the board name.

No.	Part No.	Description	Remark
C808	1-163-021-00	CERAMIC CHIP 0.01MF	50V
C809	1-163-021-00	CERAMIC CHIP 0.01MF	50V
C810	1-163-021-00	CERAMIC CHIP 0.01MF	50V
C811	1-163-021-00	CERAMIC CHIP 0.01MF	50V
C814	1-163-141-00	CERAMIC CHIP 0.001MF	50V
C815	1-163-021-00	CERAMIC CHIP 0.01MF	50V
C816	1-163-021-00	CERAMIC CHIP 0.01MF	50V
C817	1-163-021-00	CERAMIC CHIP 0.01MF	50V
C818	1-163-021-00	CERAMIC CHIP 0.01MF	50V
C820	1-163-035-00	CERAMIC CHIP 0.047MF	50V
C821	1-163-035-00	CERAMIC CHIP 0.047MF	50V
C822	1-163-035-00	CERAMIC CHIP 0.047MF	50V
C823	1-163-035-00	CERAMIC CHIP 0.047MF	50V
		CONNECTOR	
CN001	*1-506-472-11	PIN, CONNECTOR 7P	
CN002	1-506-470-11	PIN, CONNECTOR 5P	
CN003	*1-506-469-11	PIN, CONNECTOR 4P	
CN004	*1-506-467-11	PIN, CONNECTOR 2P	
CN005	*1-506-470-11	PIN, CONNECTOR 5P	
CN006	1-506-468-11	PIN, CONNECTOR 3P	
CN007	1-506-470-11	PIN, CONNECTOR 5P	
CN008	*1-506-467-11	PIN, CONNECTOR 2P	
CN009	1-506-472-11	PIN, CONNECTOR 7P	
CN010	*1-506-467-11	PIN, CONNECTOR 2P	
CN011	1-506-470-11	PIN, CONNECTOR 5P	
CN012	1-506-486-11	PIN, CONNECTOR 7P	
CN013	1-506-468-11	PIN, CONNECTOR 3P	
CN014	*1-506-469-11	PIN, CONNECTOR 4P	
CN015	1-506-468-11	PIN, CONNECTOR 3P	
CN016	*1-506-467-11	PIN, CONNECTOR 2P	
CN017	*1-506-467-11	PIN, CONNECTOR 2P	
CN018	1-506-468-11	PIN, CONNECTOR 3P	
CN019	*1-506-467-11	PIN, CONNECTOR 2P	
CN020	1-506-471-11	PIN, CONNECTOR 6P	
CN021	1-506-470-11	PIN, CONNECTOR 5P	
CN022	1-506-467-11	PIN, CONNECTOR 2P	
CN100	*1-506-474-11	PIN, CONNECTOR 9P	
CN200	1-506-471-11	PIN, CONNECTOR 6P	
CN212	*1-506-476-11	PIN, CONNECTOR 11P	
CN213	*1-506-483-21	PIN, CONNECTOR 4P	
CN214	1-506-471-11	PIN, CONNECTOR 6P	
CN215	*1-506-471-11	PIN, CONNECTOR 6P	
CN216	1-506-474-11	PIN, CONNECTOR 9P	
CN217	1-506-468-11	PIN, CONNECTOR 3P	
CN280	*1-566-128-11	CONNECTOR, BOARD TO BOARD 10P	
CN501	1-506-473-11	PIN, CONNECTOR 8P	
CN601	1-506-472-11	PIN, CONNECTOR 7P	
CN603	1-506-484-11	PIN, CONNECTOR 5P	
CN605	1-506-473-11	PIN, CONNECTOR 8P	
CN606	1-506-467-11	PIN, CONNECTOR 2P	
CN607	1-506-468-11	PIN, CONNECTOR 3P	

No.	Part No.	Description	Remark
		DIODE	
D020	8-719-914-42	DIODE DA204K	
D021	8-719-914-42	DIODE DA204K	
D060	8-719-100-05	DIODE 1S2837	
D080	8-719-914-44	DIODE DAP202K	
D081	8-719-914-44	DIODE DAP202K	
D082	8-719-914-43	DIODE DAN202K	
D098	8-719-100-03	DIODE 1S2835	
D099	8-719-100-05	DIODE 1S2837	
D120	8-719-914-44	DIODE DAP202K	
D203	8-719-200-27	DIODE E10DS2	
D204	8-719-801-45	DIODE 1SS187	
D205	8-719-914-44	DIODE DAP202K	
D206	8-719-801-45	DIODE 1SS187	
D208	8-719-914-44	DIODE DAP202K	
D209	8-719-914-43	DIODE DAN202K	
D210	8-719-914-42	DIODE DA204K	
D211	8-719-914-42	DIODE DA204K	
D212	8-719-914-44	DIODE DAP202K	
D213	8-719-914-44	DIODE DAP202K	
D214	8-719-914-44	DIODE DAP202K	
D215	8-719-914-44	DIODE DAP202K	
D216	8-719-914-44	DIODE DAP202K	
D217	8-719-100-05	DIODE 1S2837	
D218	8-719-914-43	DIODE DAN202K	
D223	8-719-914-43	DIODE DAN202K	
D225	8-719-100-05	DIODE 1S2837	
D226	8-719-914-44	DIODE DAP202K	
D227	8-719-100-05	DIODE 1S2837	
D230	8-719-105-82	DIODE RD5.1M-B2	
D231	8-719-100-05	DIODE 1S2837	
D233	8-719-100-05	DIODE 1S2837	
D280	8-719-100-05	DIODE 1S2837	
D281	8-719-914-44	DIODE DAP202K	
D282	8-719-914-44	DIODE DAP202K	
D390	8-719-914-43	DIODE DAN202K	
D391	8-719-914-44	DIODE DAP202K	
D392	8-719-100-05	DIODE 1S2837	
D393	8-719-914-43	DIODE DAN202K	
D443	8-719-801-45	DIODE 1SS187	
D461	8-719-914-44	DIODE DAP202K	
D463	8-719-801-52	DIODE 1SS190	
D464	8-719-914-44	DIODE DAP202K	
D470	8-719-100-05	DIODE 1S2837	
D485	8-719-100-05	DIODE 1S2837	
D490	8-719-101-23	DIODE 1SS123	
D501	8-719-101-23	DIODE 1SS123	
D502	8-719-100-05	DIODE 1S2837	
D600	8-719-108-24	DIODE 1SS223	
D601	8-719-100-05	DIODE 1S2837	
D603	8-719-100-03	DIODE 1S2835	
D604	8-719-100-05	DIODE 1S2837	

When indicating parts by reference number, please include the board name.

No.	Part No.	Description	Remark
D605	8-719-801-52	DIODE 1SS190	
D701	8-719-100-05	DIODE 1S2837	
D702	8-719-914-44	DIODE DAP202K	
		FUSE	
F001 ⚠	1-532-960-11	FUSE, MICRO 1.25A/125V	
		FILTER	
FL701	1-235-612-11	BPF (16KHz)	
FL702	1-235-611-11	BPF (46KHz)	
		IC	
IC001	8-752-803-61	IC CXP5048H-111Q	
IC002	8-752-803-63	IC CXP5048H-113Q	
IC003	8-759-141-21	IC UPD75104G-547-1B	
IC004	8-759-201-01	IC TC4066BF	
IC005	8-759-201-61	IC TC40H004F	
IC007	8-759-801-60	IC LB1640N	
IC008	8-759-913-67	IC MB3763P	
IC009	8-759-908-81	IC MB3763PF	
IC010	8-759-920-94	IC MSM6411B-19RS	
IC011	8-759-200-68	IC TC4011BF	
IC012	8-759-201-53	IC TC40H000F	
IC120	8-759-111-62	IC UPD7566G-506	
IC121	8-759-920-94	IC MSM6411B-19RS	
IC201	8-759-803-47	IC LA5005M	
IC202	8-759-100-94	IC UPC358G2	
IC204	8-759-929-55	IC MB64H428PF	
IC205	8-759-932-07	IC MB674101PF	
IC206	8-759-701-43	IC NJM3414D	
IC207	8-759-202-45	IC CX20114	
IC208	8-759-802-79	IC LB1616M	
IC210	8-752-003-50	IC CX20035	
IC211	8-759-925-66	IC BA6303F	
IC212	8-759-701-36	IC NJM3403AM	
IC213	8-759-201-01	IC TC4066BF	
IC214	8-759-201-00	IC TC4052BF	
IC215	8-759-100-94	IC UPC358G2	
IC216	8-759-200-81	IC TC4053BF	
IC217	8-759-200-81	IC TC4053BF	
IC218	8-759-200-81	IC TC4053BF	
IC219	8-759-100-94	IC UPC358G2	
IC220	8-759-009-51	IC MC14538BF	
IC500	8-759-141-04	IC UPD75106G-529-1B	
IC501	8-759-200-81	IC TC4053BF	
IC502	8-759-207-74	IC TC4030BFHB	
IC600	8-752-010-20	IC CX20102	
IC601	8-752-321-97	IC CXD1066Q	
IC602	8-759-911-18	IC CX23011	
IC603	8-759-927-98	IC MB8464-15LPF	
IC604	8-759-911-19	IC CX23012	
IC605	8-752-010-30	IC CX20103	

No.	Part No.	Description	Remark
IC606	8-759-929-17	IC CXD1051M	
IC701	8-759-928-56	IC CXA1042M	
IC703	8-759-100-95	IC UPC324G2	
		JUMPER RESISTOR	
JR001	1-216-296-00	METAL GLAZE 0 5% 1/8W	
		COIL	
L591	1-408-961-11	INDUCTOR 1.8UH	
L601	1-407-169-XX	INDUCTOR 100UH	
L602	1-407-169-XX	INDUCTOR 100UH	
L603	1-407-169-XX	INDUCTOR 100UH	
L606	1-407-169-XX	INDUCTOR 100UH	
L607	1-407-169-XX	INDUCTOR 100UH	
L608	1-407-169-XX	INDUCTOR 100UH	
L611	1-407-169-XX	INDUCTOR 100UH	
L620	1-408-965-21	INDUCTOR 3.9UH	
		IC LINK	
PS003 ⚠	1-532-685-00	LINK, IC (0.8A)	
PS004 ⚠	1-532-637-00	LINK, IC (1A)	
PS201 ⚠	1-532-685-00	LINK, IC (0.8A)	
		TRANSISTOR	
Q010	8-729-901-01	TRANSISTOR DTC144EK	
Q011	8-729-901-01	TRANSISTOR DTC144EK	
Q012	8-729-901-01	TRANSISTOR DTC144EK	
Q013	8-729-901-01	TRANSISTOR DTC144EK	
Q014	8-729-901-01	TRANSISTOR DTC144EK	
Q015	8-729-901-06	TRANSISTOR DTA144EK	
Q020	8-729-901-05	TRANSISTOR DTA124EK	
Q021	8-729-900-53	TRANSISTOR DTC114EK	
Q022	8-729-901-05	TRANSISTOR DTA124EK	
Q023	8-729-302-74	TRANSISTOR 2SD1366AC	
Q054	8-729-901-01	TRANSISTOR DTC144EK	
Q055	8-729-901-01	TRANSISTOR DTC144EK	
Q060	8-729-901-06	TRANSISTOR DTA144EK	
Q070	8-729-901-01	TRANSISTOR DTC144EK	
Q071	8-729-374-02	TRANSISTOR 2SB740	
Q080	8-729-901-01	TRANSISTOR DTC144EK	
Q081	8-729-901-01	TRANSISTOR DTC144EK	
Q082	8-729-901-01	TRANSISTOR DTC144EK	
Q083	8-729-100-66	TRANSISTOR 2SC1623	
Q084	8-729-901-01	TRANSISTOR DTC144EK	
Q085	8-729-901-01	TRANSISTOR DTC144EK	
Q086	8-729-100-76	TRANSISTOR 2SA812	
Q087	8-729-901-01	TRANSISTOR DTC144EK	
Q088	8-729-100-76	TRANSISTOR 2SA812	
Q090	8-729-901-01	TRANSISTOR DTC144EK	
Q091	8-729-901-01	TRANSISTOR DTC144EK	
Q098	8-729-901-01	TRANSISTOR DTC144EK	
Q099	8-729-901-06	TRANSISTOR DTA144EK	
Q103	8-729-901-06	TRANSISTOR DTA144EK	

The components identified by mark ⚠ or dotted line with mark ⚠ are critical for safety.
Replace only with part number specified.

Les composants identifiés par une marque ⚠ sont critiques pour la sécurité.
Ne les remplacer que par une pièce portant le numéro spécifé.

When indicating parts by reference number, please include the board name.

No.	Part No.	Description	Remark
Q120	8-729-901-01	TRANSISTOR DTC144EK	
Q121	8-729-901-01	TRANSISTOR DTC144EK	
Q122	8-729-901-01	TRANSISTOR DTC144EK	
Q123	8-729-901-01	TRANSISTOR DTC144EK	
Q201	8-729-901-04	TRANSISTOR DTA114EK	
Q202	8-729-900-53	TRANSISTOR DTC114EK	
Q203	8-729-400-82	TRANSISTOR 2SD1266-P	
Q204	8-729-100-66	TRANSISTOR 2SC1623	
Q205	8-729-100-66	TRANSISTOR 2SC1623	
Q206	8-729-804-67	TRANSISTOR 2SB1133-R	
Q207	8-729-901-06	TRANSISTOR DTA144EK	
Q208	8-729-100-76	TRANSISTOR 2SA812	
Q209	8-729-400-82	TRANSISTOR 2SD1266-P	
Q210	8-729-901-01	TRANSISTOR DTC144EK	
Q211	8-729-901-01	TRANSISTOR DTC144EK	
Q212	8-729-111-14	TRANSISTOR 2SA1385-Z-L	
Q213	8-729-100-67	TRANSISTOR 2SC1623	
Q214	8-729-901-01	TRANSISTOR DTC144EK	
Q215	8-729-901-01	TRANSISTOR DTC144EK	
Q226	8-729-901-01	TRANSISTOR DTC144EK	
Q227	8-729-901-06	TRANSISTOR DTA144EK	
Q228	8-729-901-01	TRANSISTOR DTC144EK	
Q229	8-729-901-06	TRANSISTOR DTA144EK	
Q230	8-729-901-01	TRANSISTOR DTC144EK	
Q233	8-729-901-01	TRANSISTOR DTC144EK	
Q235	8-729-901-01	TRANSISTOR DTC144EK	
Q236	8-729-901-01	TRANSISTOR DTC144EK	
Q237	8-729-901-06	TRANSISTOR DTA144EK	
Q238	8-729-901-01	TRANSISTOR DTC144EK	
Q239	8-729-901-01	TRANSISTOR DTC144EK	
Q240	8-729-901-01	TRANSISTOR DTC144EK	
Q242	8-729-901-01	TRANSISTOR DTC144EK	
Q243	8-729-901-01	TRANSISTOR DTC144EK	
Q244	8-729-901-01	TRANSISTOR DTC144EK	
Q245	8-729-901-06	TRANSISTOR DTA144EK	
Q246	8-729-901-01	TRANSISTOR DTC144EK	
Q248	8-729-901-01	TRANSISTOR DTC144EK	
Q249	8-729-901-06	TRANSISTOR DTA144EK	
Q250	8-729-100-66	TRANSISTOR 2SC1623	
Q251	8-729-100-66	TRANSISTOR 2SC1623	
Q252	8-729-100-76	TRANSISTOR 2SA812	
Q253	8-729-100-76	TRANSISTOR 2SA812	
Q254	8-729-901-01	TRANSISTOR DTC144EK	
Q256	8-729-901-01	TRANSISTOR DTC144EK	
Q257	8-729-901-06	TRANSISTOR DTA144EK	
Q258	8-729-901-06	TRANSISTOR DTA144EK	
Q260	8-729-302-74	TRANSISTOR 2SD1366AC	
Q261	8-729-302-74	TRANSISTOR 2SD1366AC	
Q262	8-729-302-74	TRANSISTOR 2SD1366AC	
Q263	8-729-901-06	TRANSISTOR DTA144EK	
Q264	8-729-901-04	TRANSISTOR DTA114EK	
Q280	8-729-100-66	TRANSISTOR 2SC1623	
Q281	8-729-901-01	TRANSISTOR DTC144EK	
Q282	8-729-901-01	TRANSISTOR DTC144EK	
Q285	8-729-901-06	TRANSISTOR DTA144EK	
Q286	8-729-901-01	TRANSISTOR DTC144EK	
Q287	8-729-901-01	TRANSISTOR DTC144EK	
Q288	8-729-901-01	TRANSISTOR DTC144EK	
Q289	8-729-901-01	TRANSISTOR DTC144EK	
Q390	8-729-901-01	TRANSISTOR DTC144EK	
Q401	8-729-901-01	TRANSISTOR DTC144EK	
Q470	8-729-100-76	TRANSISTOR 2SA812	
Q471	8-729-901-01	TRANSISTOR DTC144EK	
Q472	8-729-901-01	TRANSISTOR DTC144EK	
Q485	8-729-901-06	TRANSISTOR DTA144EK	
Q491	8-729-901-06	TRANSISTOR DTA144EK	
Q492	8-729-901-06	TRANSISTOR DTA144EK	
Q493	8-729-901-01	TRANSISTOR DTC144EK	
Q500	8-729-901-01	TRANSISTOR DTC144EK	
Q501	8-729-901-01	TRANSISTOR DTC144EK	
Q502	8-729-901-01	TRANSISTOR DTC144EK	
Q591	8-729-100-66	TRANSISTOR 2SC1623	
Q601	8-729-100-66	TRANSISTOR 2SC1623	
Q603	8-729-100-66	TRANSISTOR 2SC1623	
Q604	8-729-901-06	TRANSISTOR DTA144EK	
Q605	8-729-901-01	TRANSISTOR DTC144EK	
Q606	8-729-901-01	TRANSISTOR DTC144EK	
Q698	8-729-901-06	TRANSISTOR DTA144EK	
Q701	8-729-100-66	TRANSISTOR 2SC1623	
Q702	8-729-100-66	TRANSISTOR 2SC1623	
Q703	8-729-901-01	TRANSISTOR DTC144EK	
Q704	8-729-100-76	TRANSISTOR 2SA812	
Q705	8-729-100-66	TRANSISTOR 2SC1623	
Q706	8-729-100-66	TRANSISTOR 2SC1623	
Q707	8-729-100-66	TRANSISTOR 2SC1623	
Q708	8-729-100-66	TRANSISTOR 2SC1623	
Q709	8-729-100-76	TRANSISTOR 2SA812	
Q710	8-729-100-66	TRANSISTOR 2SC1623	
Q711	8-729-100-66	TRANSISTOR 2SC1623	
Q712	8-729-901-01	TRANSISTOR DTC144EK	
Q713	8-729-100-66	TRANSISTOR 2SC1623	
Q714	8-729-901-01	TRANSISTOR DTC144EK	
Q715	8-729-100-76	TRANSISTOR 2SA812	
Q717	8-729-901-01	TRANSISTOR DTC144EK	
Q777	8-729-901-01	TRANSISTOR DTC144EK	
Q785	8-729-901-06	TRANSISTOR DTA144EK	

RESISTOR

R001	1-216-073-00	METAL GLAZE	10K	5%	1/10W
R002	1-216-073-00	METAL GLAZE	10K	5%	1/10W
R003	1-216-073-00	METAL GLAZE	10K	5%	1/10W
R004	1-216-073-00	METAL GLAZE	10K	5%	1/10W
R005	1-216-073-00	METAL GLAZE	10K	5%	1/10W
R008	1-216-057-00	METAL GLAZE	2.2K	5%	1/10W
R010	1-216-073-00	METAL GLAZE	10K	5%	1/10W
R012	1-216-073-00	METAL GLAZE	10K	5%	1/10W

When indicating parts by reference number, please include the board name.

No.	Part No.	Description				Remark
R013	1-216-081-00	METAL GLAZE	22K	5%	1/10W	
R014	1-216-061-00	METAL GLAZE	3.3K	5%	1/10W	
R015	1-216-081-00	METAL GLAZE	22K	5%	1/10W	
R018	1-216-073-00	METAL GLAZE	10K	5%	1/10W	
R019	1-216-073-00	METAL GLAZE	10K	5%	1/10W	
R022	1-216-073-00	METAL GLAZE	10K	5%	1/10W	
R023	1-216-073-00	METAL GLAZE	10K	5%	1/10W	
R024	1-216-041-00	METAL GLAZE	470	5%	1/10W	
R025	1-216-073-00	METAL GLAZE	10K	5%	1/10W	
R026	1-216-073-00	METAL GLAZE	10K	5%	1/10W	
R027	1-216-073-00	METAL GLAZE	10K	5%	1/10W	
R028	1-216-073-00	METAL GLAZE	10K	5%	1/10W	
R029	1-216-073-00	METAL GLAZE	10K	5%	1/10W	
R030	1-216-073-00	METAL GLAZE	10K	5%	1/10W	
R031	1-216-073-00	METAL GLAZE	10K	5%	1/10W	
R032	1-216-049-00	METAL GLAZE	1K	5%	1/10W	
R033	1-216-073-00	METAL GLAZE	10K	5%	1/10W	
R034	1-216-073-00	METAL GLAZE	10K	5%	1/10W	
R050	1-216-073-00	METAL GLAZE	10K	5%	1/10W	
R051	1-216-073-00	METAL GLAZE	10K	5%	1/10W	
R052	1-216-073-00	METAL GLAZE	10K	5%	1/10W	
R058	1-216-073-00	METAL GLAZE	10K	5%	1/10W	
R070	1-216-081-00	METAL GLAZE	22K	5%	1/10W	
R071	1-216-051-00	METAL GLAZE	1.2K	5%	1/10W	
R072	1-247-712-11	CARBON	820	5%	1/4W	
R073	1-249-447-11	CARBON	1	5%	1/4W	
R079	1-216-097-00	METAL GLAZE	100K	5%	1/10W	
R080	1-216-001-00	METAL GLAZE	10	5%	1/10W	
R081	1-216-081-00	METAL GLAZE	22K	5%	1/10W	
R082	1-216-065-00	METAL GLAZE	4.7K	5%	1/10W	
R083	1-216-049-00	METAL GLAZE	1K	5%	1/10W	
R084	1-216-041-00	METAL GLAZE	470	5%	1/10W	
R085	1-216-073-00	METAL GLAZE	10K	5%	1/10W	
R086	1-216-097-00	METAL GLAZE	100K	5%	1/10W	
R087	1-216-073-00	METAL GLAZE	10K	5%	1/10W	
R088	1-216-089-00	METAL GLAZE	47K	5%	1/10W	
R089	1-216-073-00	METAL GLAZE	10K	5%	1/10W	
R090	1-216-073-00	METAL GLAZE	10K	5%	1/10W	
R096	1-216-081-00	METAL GLAZE	22K	5%	1/10W	
R097	1-216-113-00	METAL GLAZE	470K	5%	1/10W	
R098	1-216-113-00	METAL GLAZE	470K	5%	1/10W	
R099	1-216-073-00	METAL GLAZE	10K	5%	1/10W	
R101	1-216-073-00	METAL GLAZE	10K	5%	1/10W	
R102	1-216-097-00	METAL GLAZE	100K	5%	1/10W	
R106	1-216-065-00	METAL GLAZE	4.7K	5%	1/10W	
R120	1-216-073-00	METAL GLAZE	10K	5%	1/10W	
R121	1-216-073-00	METAL GLAZE	10K	5%	1/10W	
R123	1-216-073-00	METAL GLAZE	10K	5%	1/10W	
R151	1-216-073-00	METAL GLAZE	10K	5%	1/10W	
R152	1-216-073-00	METAL GLAZE	10K	5%	1/10W	
R153	1-216-073-00	METAL GLAZE	10K	5%	1/10W	
R154	1-216-073-00	METAL GLAZE	10K	5%	1/10W	
R155	1-216-073-00	METAL GLAZE	10K	5%	1/10W	
R156	1-216-073-00	METAL GLAZE	10K	5%	1/10W	
R157	1-216-073-00	METAL GLAZE	10K	5%	1/10W	
R158	1-216-073-00	METAL GLAZE	10K	5%	1/10W	
R160	1-216-073-00	METAL GLAZE	10K	5%	1/10W	
R161	1-216-057-00	METAL GLAZE	2.2K	5%	1/10W	
R162	1-216-073-00	METAL GLAZE	10K	5%	1/10W	
R163	1-216-073-00	METAL GLAZE	10K	5%	1/10W	
R170	1-216-061-00	METAL GLAZE	3.3K	5%	1/10W	
R171	1-216-097-00	METAL GLAZE	100K	5%	1/10W	
R200	1-249-448-11	CARBON	1.2	5%	1/4W	
R202	1-216-097-00	METAL GLAZE	100K	5%	1/10W	
R203	1-216-055-00	METAL GLAZE	1.8K	5%	1/10W	
R204	1-216-065-00	METAL GLAZE	4.7K	5%	1/10W	
R205	1-216-049-00	METAL GLAZE	1K	5%	1/10W	
R206	1-216-065-00	METAL GLAZE	4.7K	5%	1/10W	
R207	1-216-049-00	METAL GLAZE	1K	5%	1/10W	
R208	1-216-073-00	METAL GLAZE	10K	5%	1/10W	
R209	1-216-071-00	METAL GLAZE	8.2K	5%	1/10W	
R212	1-216-073-00	METAL GLAZE	10K	5%	1/10W	
R214	1-216-105-00	METAL GLAZE	220K	5%	1/10W	
R215	1-216-113-00	METAL GLAZE	470K	5%	1/10W	
R216	1-216-667-11	METAL CHIP	4.7K	0.50%	1/10W	
R217	1-216-667-11	METAL CHIP	4.7K	0.50%	1/10W	
R218	1-216-059-00	METAL GLAZE	2.7K	5%	1/10W	
R219	1-216-113-00	METAL GLAZE	470K	5%	1/10W	
R220	1-216-025-00	METAL GLAZE	100	5%	1/10W	
R221	1-216-045-00	METAL GLAZE	680	5%	1/10W	
R222	1-216-295-00	METAL GLAZE	0	5%	1/10W	
R223	1-216-025-00	METAL GLAZE	100	5%	1/10W	
R224	1-216-081-00	METAL GLAZE	22K	5%	1/10W	
R225	1-216-085-00	METAL GLAZE	33K	5%	1/10W	
R226	1-216-073-00	METAL GLAZE	10K	5%	1/10W	
R227	1-216-081-00	METAL GLAZE	22K	5%	1/10W	
R228	1-216-025-00	METAL GLAZE	100	5%	1/10W	
R229	1-216-081-00	METAL GLAZE	22K	5%	1/10W	
R230	1-216-101-00	METAL GLAZE	150K	5%	1/10W	
R231	1-216-049-00	METAL GLAZE	1K	5%	1/10W	
R232	1-216-304-11	METAL GLAZE	3.3	5%	1/10W	
R233	1-216-304-11	METAL GLAZE	3.3	5%	1/10W	
R234	1-216-304-11	METAL GLAZE	3.3	5%	1/10W	
R237	1-216-049-00	METAL GLAZE	1K	5%	1/10W	
R238	1-216-069-00	METAL GLAZE	6.8K	5%	1/10W	
R239	1-216-675-11	METAL CHIP	10K	0.50%	1/10W	
R240	1-216-683-11	METAL CHIP	22K	0.50%	1/10W	
R241	1-216-667-11	METAL CHIP	4.7K	0.50%	1/10W	
R242	1-216-683-11	METAL CHIP	22K	0.50%	1/10W	
R243	1-216-669-11	METAL CHIP	5.6K	0.50%	1/10W	
R244	1-216-681-11	METAL CHIP	18K	0.50%	1/10W	
R245	1-216-121-00	METAL GLAZE	1M	5%	1/10W	
R246	1-216-681-11	METAL CHIP	18K	0.50%	1/10W	
R247	1-216-080-00	METAL GLAZE	20K	5%	1/10W	
R248	1-216-080-00	METAL GLAZE	20K	5%	1/10W	
R249	1-216-080-00	METAL GLAZE	20K	5%	1/10W	

When indicating parts by reference number, please include the board name.

No.	Part No.	Description				Remark
R250	1-216-080-00	METAL GLAZE	20K	5%	1/10W	
R251	1-216-080-00	METAL GLAZE	20K	5%	1/10W	
R252	1-216-080-00	METAL GLAZE	20K	5%	1/10W	
R253	1-216-080-00	METAL GLAZE	20K	5%	1/10W	
R254	1-216-080-00	METAL GLAZE	20K	5%	1/10W	
R255	1-216-073-00	METAL GLAZE	10K	5%	1/10W	
R256	1-216-073-00	METAL GLAZE	10K	5%	1/10W	
R257	1-216-073-00	METAL GLAZE	10K	5%	1/10W	
R258	1-216-073-00	METAL GLAZE	10K	5%	1/10W	
R259	1-216-073-00	METAL GLAZE	10K	5%	1/10W	
R260	1-216-073-00	METAL GLAZE	10K	5%	1/10W	
R261	1-216-073-00	METAL GLAZE	10K	5%	1/10W	
R262	1-216-080-00	METAL GLAZE	20K	5%	1/10W	
R263	1-216-097-00	METAL GLAZE	100K	5%	1/10W	
R264	1-216-033-00	METAL GLAZE	220	5%	1/10W	
R266	1-216-073-00	METAL GLAZE	10K	5%	1/10W	
R267	1-216-073-00	METAL GLAZE	10K	5%	1/10W	
R268	1-216-081-00	METAL GLAZE	22K	5%	1/10W	
R269	1-216-049-00	METAL GLAZE	1K	5%	1/10W	
R270	1-216-073-00	METAL GLAZE	10K	5%	1/10W	
R271	1-216-113-00	METAL GLAZE	470K	5%	1/10W	
R280	1-216-081-00	METAL GLAZE	22K	5%	1/10W	
R281	1-216-693-11	METAL CHIP	56K	0.50%	1/10W	
R282	1-216-077-11	METAL CHIP	15K	0.50%	1/10W	
R283	1-216-089-00	METAL GLAZE	47K	5%	1/10W	
R284	1-216-081-00	METAL GLAZE	22K	5%	1/10W	
R285	1-216-685-11	METAL CHIP	27K	0.50%	1/10W	
R286	1-249-441-11	CARBON	100K	5%	1/4W	
R287	1-216-049-00	METAL GLAZE	1K	5%	1/10W	
R288	1-216-049-00	METAL GLAZE	1K	5%	1/10W	
R290	1-216-073-00	METAL GLAZE	10K	5%	1/10W	
R292	1-216-295-00	METAL GLAZE	0	5%	1/10W	
R293	1-216-073-00	METAL GLAZE	10K	5%	1/10W	
R294	1-216-073-00	METAL GLAZE	10K	5%	1/10W	
R295	1-216-103-00	METAL GLAZE	180K	5%	1/10W	
R296	1-216-121-00	METAL GLAZE	1M	5%	1/10W	
R297	1-216-097-00	METAL GLAZE	100K	5%	1/10W	
R298	1-216-049-00	METAL GLAZE	1K	5%	1/10W	
R299	1-216-073-00	METAL GLAZE	10K	5%	1/10W	
R300	1-216-073-00	METAL GLAZE	10K	5%	1/10W	
R303	1-216-073-00	METAL GLAZE	10K	5%	1/10W	
R305	1-216-085-00	METAL GLAZE	33K	5%	1/10W	
R306	1-216-077-00	METAL GLAZE	15K	5%	1/10W	
R307	1-216-043-00	METAL GLAZE	560	5%	1/10W	
R308	1-216-043-00	METAL GLAZE	560	5%	1/10W	
R309	1-216-073-00	METAL GLAZE	10K	5%	1/10W	
R310	1-216-043-00	METAL GLAZE	560	5%	1/10W	
R311	1-216-113-00	METAL GLAZE	470K	5%	1/10W	
R312	1-216-113-00	METAL GLAZE	470K	5%	1/10W	
R313	1-216-061-00	METAL GLAZE	3.3K	5%	1/10W	
R314	1-216-073-00	METAL GLAZE	10K	5%	1/10W	
R315	1-216-085-00	METAL GLAZE	33K	5%	1/10W	
R316	1-216-101-00	METAL GLAZE	150K	5%	1/10W	

No.	Part No.	Description				Remark
R317	1-216-085-00	METAL GLAZE	33K	5%	1/10W	
R319	1-216-295-00	METAL GLAZE	0	5%	1/10W	
R320	1-216-685-11	METAL CHIP	27K	0.50%	1/10W	
R321	1-216-073-00	METAL GLAZE	10K	5%	1/10W	
R322	1-216-089-00	METAL GLAZE	47K	5%	1/10W	
R323	1-216-073-00	METAL GLAZE	10K	5%	1/10W	
R324	1-216-099-00	METAL GLAZE	120K	5%	1/10W	
R326	1-216-109-00	METAL GLAZE	330K	5%	1/10W	
R327	1-216-061-00	METAL GLAZE	3.3K	5%	1/10W	
R328	1-216-091-00	METAL GLAZE	56K	5%	1/10W	
R329	1-216-117-00	METAL GLAZE	680K	5%	1/10W	
R330	1-216-117-00	METAL GLAZE	680K	5%	1/10W	
R331	1-216-081-00	METAL GLAZE	22K	5%	1/10W	
R332	1-216-113-00	METAL GLAZE	470K	5%	1/10W	
R333	1-216-073-00	METAL GLAZE	10K	5%	1/10W	
R334	1-216-113-00	METAL GLAZE	470K	5%	1/10W	
R335	1-216-049-00	METAL GLAZE	1K	5%	1/10W	
R336	1-216-081-00	METAL GLAZE	22K	5%	1/10W	
R337	1-216-073-00	METAL GLAZE	10K	5%	1/10W	
R338	1-216-121-00	METAL GLAZE	1M	5%	1/10W	
R339	1-216-091-00	METAL GLAZE	56K	5%	1/10W	
R340	1-216-663-11	METAL CHIP	3.3K	0.50%	1/10W	
R341	1-216-667-11	METAL CHIP	4.7K	0.50%	1/10W	
R342	1-216-073-00	METAL GLAZE	10K	5%	1/10W	
R343	1-216-073-00	METAL GLAZE	10K	5%	1/10W	
R344	1-216-043-00	METAL GLAZE	560	5%	1/10W	
R345	1-216-105-00	METAL GLAZE	220K	5%	1/10W	
R346	1-216-105-00	METAL GLAZE	220K	5%	1/10W	
R347	1-216-065-00	METAL GLAZE	4.7K	5%	1/10W	
R348	1-216-089-00	METAL GLAZE	47K	5%	1/10W	
R349	1-216-049-00	METAL GLAZE	1K	5%	1/10W	
R350	1-216-065-00	METAL GLAZE	4.7K	5%	1/10W	
R351	1-216-073-00	METAL GLAZE	10K	5%	1/10W	
R352	1-216-685-11	METAL CHIP	27K	0.50%	1/10W	
R353	1-216-663-11	METAL CHIP	3.3K	0.50%	1/10W	
R354	1-216-691-11	METAL CHIP	47K	0.50%	1/10W	
R355	1-216-089-00	METAL GLAZE	47K	5%	1/10W	
R356	1-216-697-11	METAL CHIP	82K	0.50%	1/10W	
R357	1-216-695-11	METAL CHIP	68K	0.50%	1/10W	
R358	1-216-663-11	METAL CHIP	3.3K	0.50%	1/10W	
R359	1-216-693-11	METAL CHIP	56K	0.50%	1/10W	
R360	1-216-073-00	METAL GLAZE	10K	5%	1/10W	
R361	1-216-089-00	METAL GLAZE	47K	5%	1/10W	
R362	1-216-073-00	METAL GLAZE	10K	5%	1/10W	
R363	1-216-073-00	METAL GLAZE	10K	5%	1/10W	
R364	1-216-091-00	METAL GLAZE	56K	5%	1/10W	
R365	1-216-097-00	METAL GLAZE	100K	5%	1/10W	
R366	1-216-105-00	METAL GLAZE	220K	5%	1/10W	
R367	1-216-089-00	METAL GLAZE	47K	5%	1/10W	
R368	1-216-085-00	METAL GLAZE	33K	5%	1/10W	
R370	1-216-097-00	METAL GLAZE	100K	5%	1/10W	
R371	1-216-073-00	METAL GLAZE	10K	5%	1/10W	
R372	1-216-681-11	METAL CHIP	18K	0.50%	1/10W	

When indicating parts by reference number, please include the board name.

No.	Part No.	Description				Remark
R373	1-216-073-00	METAL GLAZE	10K	5%	1/10W	
R375	1-216-697-11	METAL CHIP	82K	0.50%	1/10W	
R376	1-216-105-00	METAL GLAZE	220K	5%	1/10W	
R377	1-216-105-00	METAL GLAZE	220K	5%	1/10W	
R378	1-216-073-00	METAL GLAZE	10K	5%	1/10W	
R380	1-216-113-00	METAL GLAZE	470K	5%	1/10W	
R381	1-216-113-00	METAL GLAZE	470K	5%	1/10W	
R382	1-216-101-00	METAL GLAZE	150K	5%	1/10W	
R383	1-216-683-11	METAL CHIP	22K	0.50%	1/10W	
R384	1-216-667-11	METAL CHIP	4.7K	0.50%	1/10W	
R385	1-216-683-11	METAL CHIP	22K	0.50%	1/10W	
R386	1-216-667-11	METAL CHIP	4.7K	0.50%	1/10W	
R388	1-216-073-00	METAL GLAZE	10K	5%	1/10W	
R390	1-216-073-00	METAL GLAZE	10K	5%	1/10W	
R391	1-216-097-00	METAL GLAZE	100K	5%	1/10W	
R392	1-216-065-00	METAL GLAZE	4.7K	5%	1/10W	
R395	1-216-073-00	METAL GLAZE	10K	5%	1/10W	
R396	1-216-699-11	METAL CHIP	100K	0.50%	1/10W	
R397	1-216-685-11	METAL CHIP	27K	0.50%	1/10W	
R398	1-216-109-00	METAL GLAZE	330K	5%	1/10W	
R399	1-216-073-00	METAL GLAZE	10K	5%	1/10W	
R401	1-216-073-00	METAL GLAZE	10K	5%	1/10W	
R403	1-216-295-00	METAL GLAZE	0	5%	1/10W	
R404	1-216-049-00	METAL GLAZE	1K	5%	1/10W	
R405	1-216-063-00	METAL GLAZE	3.9K	5%	1/10W	
R406	1-216-295-00	METAL GLAZE	0	5%	1/10W	
R408	1-216-115-00	METAL GLAZE	560K	5%	1/10W	
R461	1-216-097-00	METAL GLAZE	100K	5%	1/10W	
R462	1-216-085-00	METAL GLAZE	33K	5%	1/10W	
R470	1-216-109-00	METAL GLAZE	330K	5%	1/10W	
R471	1-216-109-00	METAL GLAZE	330K	5%	1/10W	
R472	1-216-109-00	METAL GLAZE	330K	5%	1/10W	
R473	1-216-097-00	METAL GLAZE	100K	5%	1/10W	
R474	1-216-049-00	METAL GLAZE	1K	5%	1/10W	
R475	1-216-097-00	METAL GLAZE	100K	5%	1/10W	
R476	1-216-073-00	METAL GLAZE	10K	5%	1/10W	
R485	1-216-091-00	METAL GLAZE	56K	5%	1/10W	
R486	1-216-073-00	METAL GLAZE	10K	5%	1/10W	
R492	1-216-105-00	METAL GLAZE	220K	5%	1/10W	
R493	1-216-073-00	METAL GLAZE	10K	5%	1/10W	
R494	1-216-085-00	METAL GLAZE	33K	5%	1/10W	
R502	1-216-073-00	METAL GLAZE	10K	5%	1/10W	
R504	1-216-061-00	METAL GLAZE	3.3K	5%	1/10W	
R505	1-216-061-00	METAL GLAZE	3.3K	5%	1/10W	
R506	1-216-061-00	METAL GLAZE	3.3K	5%	1/10W	
R508	1-216-085-00	METAL GLAZE	33K	5%	1/10W	
R509	1-216-081-00	METAL GLAZE	22K	5%	1/10W	
R510	1-216-081-00	METAL GLAZE	22K	5%	1/10W	
R511	1-216-081-00	METAL GLAZE	22K	5%	1/10W	
R514	1-216-073-00	METAL GLAZE	10K	5%	1/10W	
R515	1-216-073-00	METAL GLAZE	10K	5%	1/10W	
R516	1-216-073-00	METAL GLAZE	10K	5%	1/10W	
R517	1-216-049-00	METAL GLAZE	1K	5%	1/10W	

No.	Part No.	Description				Remark
R518	1-216-073-00	METAL GLAZE	10K	5%	1/10W	
R519	1-216-085-00	METAL GLAZE	33K	5%	1/10W	
R530	1-216-081-00	METAL GLAZE	22K	5%	1/10W	
R591	1-216-095-00	METAL GLAZE	82K	5%	1/10W	
R592	1-216-097-00	METAL GLAZE	100K	5%	1/10W	
R593	1-216-057-00	METAL GLAZE	2.2K	5%	1/10W	
R595	1-216-067-00	METAL GLAZE	5.6K	5%	1/10W	
R596	1-216-067-00	METAL GLAZE	5.6K	5%	1/10W	
R607	1-216-045-00	METAL GLAZE	680	5%	1/10W	
R608	1-216-097-00	METAL GLAZE	100K	5%	1/10W	
R609	1-216-049-00	METAL GLAZE	1K	5%	1/10W	
R610	1-216-049-00	METAL GLAZE	1K	5%	1/10W	
R611	1-216-001-00	METAL GLAZE	10	5%	1/10W	
R612	1-216-053-00	METAL GLAZE	1.5K	5%	1/10W	
R614	1-216-045-00	METAL GLAZE	680	5%	1/10W	
R615	1-216-051-00	METAL GLAZE	1.2K	5%	1/10W	
R616	1-216-049-00	METAL GLAZE	1K	5%	1/10W	
R617	1-216-073-00	METAL GLAZE	10K	5%	1/10W	
R618	1-216-071-00	METAL GLAZE	8.2K	5%	1/10W	
R619	1-216-051-00	METAL GLAZE	1.2K	5%	1/10W	
R620	1-216-645-11	METAL CHIP	560	0.50%	1/10W	
R621	1-216-073-00	METAL GLAZE	10K	5%	1/10W	
R622	1-216-077-00	METAL GLAZE	15K	5%	1/10W	
R623	1-216-077-00	METAL GLAZE	15K	5%	1/10W	
R624	1-216-049-00	METAL GLAZE	1K	5%	1/10W	
R625	1-216-033-00	METAL GLAZE	220	5%	1/10W	
R626	1-216-061-00	METAL GLAZE	3.3K	5%	1/10W	
R627	1-216-081-00	METAL GLAZE	22K	5%	1/10W	
R628	1-216-079-00	METAL GLAZE	18K	5%	1/10W	
R632	1-216-085-00	METAL GLAZE	33K	5%	1/10W	
R633	1-216-085-00	METAL GLAZE	33K	5%	1/10W	
R634	1-216-085-00	METAL GLAZE	33K	5%	1/10W	
R635	1-216-029-00	METAL GLAZE	150	5%	1/10W	
R636	1-216-065-00	METAL GLAZE	4.7K	5%	1/10W	
R637	1-216-069-00	METAL GLAZE	6.8K	5%	1/10W	
R638	1-216-069-00	METAL GLAZE	6.8K	5%	1/10W	
R640	1-216-073-00	METAL GLAZE	10K	5%	1/10W	
R641	1-216-085-00	METAL GLAZE	33K	5%	1/10W	
R650	1-216-049-00	METAL GLAZE	1K	5%	1/10W	
R652	1-216-109-00	METAL GLAZE	330K	5%	1/10W	
R653	1-216-109-00	METAL GLAZE	330K	5%	1/10W	
R660	1-216-073-00	METAL GLAZE	10K	5%	1/10W	
R661	1-216-073-00	METAL GLAZE	10K	5%	1/10W	
R662	1-216-033-00	METAL GLAZE	220	5%	1/10W	
R664	1-216-073-00	METAL GLAZE	10K	5%	1/10W	
R665	1-216-097-00	METAL GLAZE	100K	5%	1/10W	
R671	1-216-033-00	METAL GLAZE	220	5%	1/10W	
R672	1-216-057-00	METAL GLAZE	2.2K	5%	1/10W	
R697	1-216-041-00	METAL GLAZE	470	5%	1/10W	
R698	1-216-049-00	METAL GLAZE	1K	5%	1/10W	
R699	1-216-049-00	METAL GLAZE	1K	5%	1/10W	
R701	1-216-105-00	METAL GLAZE	220K	5%	1/10W	
R702	1-216-081-00	METAL GLAZE	22K	5%	1/10W	

When indicating parts by reference number, please include the board name.

No.	Part No.	Description				Remark
R703	1-216-089-00	METAL GLAZE	47K	5%	1/10W	
R704	1-216-097-00	METAL GLAZE	100K	5%	1/10W	
R705	1-216-079-00	METAL GLAZE	18K	5%	1/10W	
R706	1-216-117-00	METAL GLAZE	680K	5%	1/10W	
R707	1-216-091-00	METAL GLAZE	56K	5%	1/10W	
R708	1-216-073-00	METAL GLAZE	10K	5%	1/10W	
R709	1-216-097-00	METAL GLAZE	100K	5%	1/10W	
R710	1-216-089-00	METAL GLAZE	47K	5%	1/10W	
R711	1-216-073-00	METAL GLAZE	10K	5%	1/10W	
R712	1-216-097-00	METAL GLAZE	100K	5%	1/10W	
R713	1-216-111-00	METAL GLAZE	390K	5%	1/10W	
R715	1-216-049-00	METAL GLAZE	1K	5%	1/10W	
R716	1-216-065-00	METAL GLAZE	4.7K	5%	1/10W	
R717	1-216-061-00	METAL GLAZE	3.3K	5%	1/10W	
R718	1-216-061-00	METAL GLAZE	3.3K	5%	1/10W	
R719	1-216-061-00	METAL GLAZE	3.3K	5%	1/10W	
R720	1-216-085-00	METAL GLAZE	33K	5%	1/10W	
R721	1-216-081-00	METAL GLAZE	22K	5%	1/10W	
R722	1-216-049-00	METAL GLAZE	1K	5%	1/10W	
R723	1-216-079-00	METAL GLAZE	18K	5%	1/10W	
R724	1-216-085-00	METAL GLAZE	33K	5%	1/10W	
R725	1-216-045-00	METAL GLAZE	680	5%	1/10W	
R726	1-216-073-00	METAL GLAZE	10K	5%	1/10W	
R727	1-216-077-00	METAL GLAZE	15K	5%	1/10W	
R728	1-216-027-00	METAL GLAZE	120	5%	1/10W	
R729	1-216-035-00	METAL GLAZE	270	5%	1/10W	
R730	1-216-039-00	METAL GLAZE	390	5%	1/10W	
R731	1-216-076-00	METAL GLAZE	13K	5%	1/10W	
R732	1-216-057-00	METAL GLAZE	2.2K	5%	1/10W	
R733	1-216-051-00	METAL GLAZE	1.2K	5%	1/10W	
R734	1-216-049-00	METAL GLAZE	1K	5%	1/10W	
R735	1-216-085-00	METAL GLAZE	33K	5%	1/10W	
R736	1-216-081-00	METAL GLAZE	22K	5%	1/10W	
R737	1-216-049-00	METAL GLAZE	1K	5%	1/10W	
R738	1-216-061-00	METAL GLAZE	3.3K	5%	1/10W	
R739	1-216-061-00	METAL GLAZE	3.3K	5%	1/10W	
R740	1-216-065-00	METAL GLAZE	4.7K	5%	1/10W	
R741	1-216-061-00	METAL GLAZE	3.3K	5%	1/10W	
R742	1-216-061-00	METAL GLAZE	3.3K	5%	1/10W	
R743	1-216-065-00	METAL GLAZE	4.7K	5%	1/10W	
R744	1-216-079-00	METAL GLAZE	18K	5%	1/10W	
R745	1-216-085-00	METAL GLAZE	33K	5%	1/10W	
R746	1-216-056-00	METAL GLAZE	2K	5%	1/10W	
R747	1-216-057-00	METAL GLAZE	2.2K	5%	1/10W	
R748	1-216-051-00	METAL GLAZE	1.2K	5%	1/10W	
R749	1-216-049-00	METAL GLAZE	1K	5%	1/10W	
R750	1-216-049-00	METAL GLAZE	1K	5%	1/10W	
R753	1-216-069-00	METAL GLAZE	6.8K	5%	1/10W	
R754	1-216-057-00	METAL GLAZE	2.2K	5%	1/10W	
R755	1-216-057-00	METAL GLAZE	2.2K	5%	1/10W	
R759	1-216-073-00	METAL GLAZE	10K	5%	1/10W	
R760	1-216-067-00	METAL GLAZE	5.6K	5%	1/10W	
R761	1-216-748-11	METAL GLAZE	39K	5%	1/10W	

No.	Part No.	Description				Remark
R762	1-216-073-00	METAL GLAZE	10K	5%	1/10W	
R764	1-216-073-00	METAL GLAZE	10K	5%	1/10W	
R770	1-216-121-00	METAL GLAZE	1M	5%	1/10W	
R785	1-216-049-00	METAL GLAZE	1K	5%	1/10W	
R786	1-216-051-00	METAL GLAZE	1.2K	5%	1/10W	
R801	1-216-049-00	METAL GLAZE	1K	5%	1/10W	
R802	1-216-049-00	METAL GLAZE	1K	5%	1/10W	
R803	1-216-049-00	METAL GLAZE	1K	5%	1/10W	
R804	1-216-049-00	METAL GLAZE	1K	5%	1/10W	
R805	1-216-037-00	METAL GLAZE	330	5%	1/10W	
R806	1-216-049-00	METAL GLAZE	1K	5%	1/10W	
R807	1-216-049-00	METAL GLAZE	1K	5%	1/10W	
R808	1-216-049-00	METAL GLAZE	1K	5%	1/10W	
R809	1-216-049-00	METAL GLAZE	1K	5%	1/10W	
R810	1-216-049-00	METAL GLAZE	1K	5%	1/10W	
R811	1-216-049-00	METAL GLAZE	1K	5%	1/10W	
R812	1-216-049-00	METAL GLAZE	1K	5%	1/10W	
R813	1-216-049-00	METAL GLAZE	1K	5%	1/10W	
R814	1-216-025-00	METAL GLAZE	100	5%	1/10W	
R815	1-216-049-00	METAL GLAZE	1K	5%	1/10W	
R816	1-216-049-00	METAL GLAZE	1K	5%	1/10W	
R817	1-216-049-00	METAL GLAZE	1K	5%	1/10W	
R818	1-216-037-00	METAL GLAZE	330	5%	1/10W	
R819	1-216-037-00	METAL GLAZE	330	5%	1/10W	

VARIABLE RESISTOR

RV201	1-228-998-00	RES, ADJ, METAL GLAZE 220K
RV202	1-228-998-00	RES, ADJ, METAL GLAZE 220K
RV203	1-228-993-00	RES, ADJ, CARBON 4.7K
RV204	1-228-993-00	RES, ADJ, CARBON 4.7K
RV205	1-228-995-00	RES, ADJ, CARBON 22K
RV206	1-228-995-00	RES, ADJ, METAL GLAZE 22K
RV207	1-228-995-00	RES, ADJ, CARBON 22K
RV208	1-228-995-00	RES, ADJ, METAL GLAZE 22K
RV209	1-228-999-00	RES, ADJ, CARBON 470K
RV210	1-228-993-00	RES, ADJ, METAL GLAZE 4.7K
RV212	1-228-993-00	RES, ADJ, CARBON 4.7K
RV215	1-228-991-00	RES, ADJ, METAL GLAZE 2.2K
RV216	1-228-991-00	RES, ADJ, METAL GLAZE 2.2K
RV217	1-228-997-00	RES, ADJ, METAL GLAZE 100K
RV218	1-228-997-00	RES, ADJ, METAL GLAZE 100K
RV601	1-230-521-11	RES, ADJ, SOLID 2.2K
RV602	1-230-522-11	RES, ADJ, SOLID 4.7K
RV603	1-230-527-11	RES, ADJ, SOLID 100K
RV604	1-230-523-11	RES, ADJ, SOLID 10K
RV701	1-228-996-00	RES, ADJ, CARBON 47K

CRYSTAL

X001	1-567-346-11	OSCILLATOR, CERAMIC (5MHz)
X002	1-567-121-00	VIBRATOR, CRYSTAL
X080	1-567-192-11	OSCILLATOR, CERAMIC (4MHz)
X120	1-527-841-11	OSCILLATOR, CERAMIC (660KHz)
X201	1-567-700-21	VIBRATOR, CRYSTAL

When indicating parts by reference number, please include the board name.

No.	Part No.	Description			Remark
X600	1-567-419-11	VIBRATOR, LITHIUM TANTALATE			
**********					
	*A-7061-073-A	DM-18 BOARD, COMPLETE			
		**********			
		CAPACITOR			
C001	1-163-021-00	CERAMIC CHIP	0.01MF		50V
C002	1-130-483-00	MYLAR	0.01MF	5%	50V
C003	1-130-491-00	MYLAR	0.047MF	5%	50V
C004	1-130-491-00	MYLAR	0.047MF	5%	50V
C005	1-126-157-11	ELECT	10MF	20%	16V
C006	1-163-038-00	CERAMIC CHIP	0.1MF		25V
C007	1-163-038-00	CERAMIC CHIP	0.1MF		25V
C008	1-124-282-00	ELECT	22MF	20%	16V
C009	1-124-589-11	ELECT	47MF	20%	10V
C010	1-124-257-00	ELECT	2.2MF	20%	50V
C011	1-124-282-00	ELECT	22MF	20%	16V
		CONNECTOR			
CN001	1-563-311-11	CONNECTOR, BOARD TO BOARD 10P			
		DIODE			
D001	8-719-801-45	DIODE 1SS187			
D009	8-719-801-45	DIODE 1SS187			
D010	8-719-101-23	DIODE 1SS123			
		IC			
IC001	8-759-937-25	IC BA6303			
IC002	8-759-132-40	IC UPC324C			
IC003	8-759-208-14	IC TC4066BPHB			
		JUMPER RESISTOR			
JR001	1-216-295-00	METAL GLAZE	0	5%	1/10W
JR002	1-216-295-00	METAL GLAZE	0	5%	1/10W
JR003	1-216-295-00	METAL GLAZE	0	5%	1/10W
JR004	1-216-295-00	METAL GLAZE	0	5%	1/10W
JR005	1-216-296-00	METAL GLAZE	0	5%	1/8W
JR006	1-216-296-00	METAL GLAZE	0	5%	1/8W
JR007	1-216-296-00	METAL GLAZE	0	5%	1/8W
		TRANSISTOR			
Q007	8-729-901-01	TRANSISTOR DTC144EK			
		RESISTOR			
R001	1-216-069-00	METAL GLAZE	6.8K	5%	1/10W
R004	1-216-073-00	METAL GLAZE	10K	5%	1/10W
R005	1-216-083-00	METAL GLAZE	27K	5%	1/10W
R006	1-216-689-11	METAL CHIP	39K	0.50%	1/10W
R007	1-216-691-11	METAL CHIP	47K	0.50%	1/10W
R008	1-216-089-00	METAL GLAZE	47K	5%	1/10W
R009	1-216-073-00	METAL GLAZE	10K	5%	1/10W
R010	1-216-073-00	METAL GLAZE	10K	5%	1/10W
R011	1-216-059-00	METAL GLAZE	2.7K	5%	1/10W
R012	1-216-222-00	METAL GLAZE	10K	5%	1/8W
R013	1-216-049-00	METAL GLAZE	1K	5%	1/10W
R014	1-216-085-00	METAL GLAZE	33K	5%	1/10W
R015	1-216-073-00	METAL GLAZE	10K	5%	1/10W
R016	1-216-073-00	METAL GLAZE	10K	5%	1/10W
R017	1-216-057-00	METAL GLAZE	2.2K	5%	1/10W
R018	1-216-077-00	METAL GLAZE	15K	5%	1/10W
R019	1-216-206-00	METAL GLAZE	2.2K	5%	1/8W
R026	1-216-684-11	METAL CHIP	24K	0.50%	1/10W
R030	1-216-073-00	METAL GLAZE	10K	5%	1/10W
**********					
	*A-7061-728-A	AU-54 BOARD, COMPLETE			
		**********			
		(Including the AD-12 Board(IC701), AF-20 Board(IC501), MK-2 Board(IC850) and NR-6 Board(IC601).)			
		BAND PASS FILTER			
BPF801	1-235-517-11	FILTER, BAND PASS (230KHZ)			
BPF802	1-235-517-11	FILTER, BAND PASS (230KHZ)			
		CAPACITOR			
C101	1-163-075-00	CERAMIC CHIP	0.047MF		50V
C211	1-124-443-00	ELECT	100MF	20%	10V
C213	1-124-443-00	ELECT	100MF	20%	10V
C214	1-163-075-00	CERAMIC CHIP	0.047MF		50V
C216	1-163-075-00	CERAMIC CHIP	0.047MF		50V
C218	1-124-443-00	ELECT	100MF	20%	10V
C219	1-124-443-00	ELECT	100MF	20%	10V
C220	1-124-443-00	ELECT	100MF	20%	10V
C226	1-163-075-00	CERAMIC CHIP	0.047MF		50V
C227	1-163-075-00	CERAMIC CHIP	0.047MF		50V
C305	1-124-499-11	ELECT	1MF	20%	50V
C306	1-163-075-00	CERAMIC CHIP	0.047MF		50V
C308	1-130-495-00	MYLAR	0.1MF	5%	50V
C309	1-163-101-00	CERAMIC CHIP	22PF	5%	50V
C310	1-163-117-00	CERAMIC CHIP	100PF	5%	50V
C311	1-130-472-00	MYLAR	0.0012MF	5%	50V
C312	1-163-117-00	CERAMIC CHIP	100PF	5%	50V
C313	1-130-474-00	MYLAR	0.0018MF	5%	50V
C314	1-130-489-00	MYLAR	0.033MF	5%	50V
C321	1-124-261-00	ELECT	10MF	20%	50V
C331	1-163-023-00	CERAMIC CHIP	0.015MF	10%	50V
C405	1-124-499-11	ELECT	1MF	20%	50V
C406	1-163-075-00	CERAMIC CHIP	0.047MF		50V
C408	1-130-495-00	MYLAR	0.1MF	5%	50V
C409	1-163-101-00	CERAMIC CHIP	22PF	5%	50V
C410	1-163-117-00	CERAMIC CHIP	100PF	5%	50V
C411	1-130-472-00	MYLAR	0.0012MF	5%	50V

When indicating parts by reference number, please include the board name.

No.	Part No.	Description				Remark
C412	1-163-117-00	CERAMIC CHIP	100PF	5%	50V	
C413	1-130-474-00	MYLAR	0.0018MF	5%	50V	
C414	1-130-489-00	MYLAR	0.033MF	5%	50V	
C421	1-124-261-00	ELECT	10MF	20%	50V	
C431	1-163-023-00	CERAMIC CHIP	0.015MF	10%	50V	
C502	1-163-075-00	CERAMIC CHIP	0.047MF		50V	
C507	1-124-499-11	ELECT	1MF	20%	50V	
C701	1-124-443-00	ELECT	100MF	20%	10V	
C801	1-163-075-00	CERAMIC CHIP	0.047MF		50V	
C802	1-163-063-00	CERAMIC CHIP	0.022MF		50V	
C803	1-163-075-00	CERAMIC CHIP	0.047MF		50V	
C804	1-163-075-00	CERAMIC CHIP	0.047MF		50V	
C805	1-126-160-11	ELECT	1MF	20%	50V	
C806	1-163-075-00	CERAMIC CHIP	0.047MF		50V	
C821	1-163-075-00	CERAMIC CHIP	0.047MF		50V	
C822	1-163-063-00	CERAMIC CHIP	0.022MF		50V	
C823	1-163-075-00	CERAMIC CHIP	0.047MF		50V	
C824	1-163-075-00	CERAMIC CHIP	0.047MF		50V	
C825	1-124-499-11	ELECT	1MF	20%	50V	
C826	1-163-075-00	CERAMIC CHIP	0.047MF		50V	
C840	1-124-446-11	ELECT	47MF	20%	10V	
C841	1-163-063-00	CERAMIC CHIP	0.022MF		50V	
C901	1-124-902-00	ELECT	0.47MF	20%	50V	
C902	1-163-015-00	CERAMIC CHIP	0.0033MF	10%	50V	
C903	1-124-589-11	ELECT	47MF	20%	10V	
C904	1-124-465-00	ELECT	0.47MF	20%	50V	
C921	1-163-989-11	CERAMIC CHIP	0.033MF	10%	25V	
C951	1-124-902-00	ELECT	0.47MF	20%	50V	

CONNECTOR

CN201	1-506-470-11	PIN, CONNECTOR 5P	
CN202	*1-506-469-11	PIN, CONNECTOR 4P	
CN204	1-506-471-11	PIN, CONNECTOR 6P	
CN205	1-506-469-11	PIN, CONNECTOR 4P	
CN207	*1-506-467-11	PIN, CONNECTOR 2P	
CN208	1-506-470-11	PIN, CONNECTOR 5P	
CN501	1-506-470-11	PIN, CONNECTOR 5P	
CN601	1-506-470-11	PIN, CONNECTOR 5P	
CN602	1-506-468-11	PIN, CONNECTOR 3P	
CN801	1-506-468-11	PIN, CONNECTOR 3P	
CN901	1-506-467-11	PIN, CONNECTOR 2P	

DIODE

D701	8-719-109-60	DIODE RD2.7ES-B2

FILTER

FL301	1-235-565-21	FILTER, LOW PASS (15KHz)
FL401	1-235-565-21	FILTER, LOW PASS (15KHz)
FL501	1-235-484-11	FILTER, BAND PASS (1.5MHz)

IC

IC101	8-759-937-21	IC CXD1078M
IC201	8-759-240-52	IC TC4052BP
IC203	8-759-145-58	IC UPC4558C
IC301	8-759-700-40	IC NJ4560S
IC302	8-759-208-06	IC TC4051BPHB
IC303	8-759-700-40	IC NJM4560S
IC304	8-759-700-40	IC NJM4560S
IC401	8-759-700-40	IC NJM4560S
IC402	8-759-208-06	IC TC4051BPHB
IC403	8-759-700-40	IC NJM4560S
IC404	8-759-700-40	IC NJM4560S
IC503	8-759-200-81	IC TC4053BP
IC602	8-759-200-81	IC TC4053BP
IC701	8-752-322-57	IC CX23010
IC901	8-759-933-22	IC BA3707

JUMPER RESISTOR

JR001	1-216-295-00	METAL GLAZE	0	5%	1/10W	
JR002	1-216-295-00	METAL GLAZE	0	5%	1/10W	
JR003	1-216-295-00	METAL GLAZE	0	5%	1/10W	
JR004	1-216-295-00	METAL GLAZE	0	5%	1/10W	
JR005	1-216-295-00	METAL GLAZE	0	5%	1/10W	
JR006	1-216-295-00	METAL GLAZE	0	5%	1/10W	
JR007	1-216-295-00	METAL GLAZE	0	5%	1/10W	
JR008	1-216-295-00	METAL GLAZE	0	5%	1/10W	
JR009	1-216-295-00	METAL GLAZE	0	5%	1/10W	
JR010	1-216-295-00	METAL GLAZE	0	5%	1/10W	
JR011	1-216-295-00	METAL GLAZE	0	5%	1/10W	
JR012	1-216-295-00	METAL GLAZE	0	5%	1/10W	
JR015	1-216-295-00	METAL GLAZE	0	5%	1/10W	
JR016	1-216-295-00	METAL GLAZE	0	5%	1/10W	
JR017	1-216-295-00	METAL GLAZE	0	5%	1/10W	
JR018	1-216-295-00	METAL GLAZE	0	5%	1/10W	
JR019	1-216-295-00	METAL GLAZE	0	5%	1/10W	
JR020	1-216-295-00	METAL GLAZE	0	5%	1/10W	
JR021	1-216-295-00	METAL GLAZE	0	5%	1/10W	
JR022	1-216-295-00	METAL GLAZE	0	5%	1/10W	
JR023	1-216-295-00	METAL GLAZE	0	5%	1/10W	
JR025	1-216-295-00	METAL GLAZE	0	5%	1/10W	
JR026	1-216-295-00	METAL GLAZE	0	5%	1/10W	
JR027	1-216-295-00	METAL GLAZE	0	5%	1/10W	
JR028	1-216-295-00	METAL GLAZE	0	5%	1/10W	
JR029	1-216-295-00	METAL GLAZE	0	5%	1/10W	
JR030	1-216-295-00	METAL GLAZE	0	5%	1/10W	
JR031	1-216-295-00	METAL GLAZE	0	5%	1/10W	
JR032	1-216-295-00	METAL GLAZE	0	5%	1/10W	
JR033	1-216-295-00	METAL GLAZE	0	5%	1/10W	
JR034	1-216-295-00	METAL GLAZE	0	5%	1/10W	
JR035	1-216-295-00	METAL GLAZE	0	5%	1/10W	
JR036	1-216-295-00	METAL GLAZE	0	5%	1/10W	
JR037	1-216-295-00	METAL GLAZE	0	5%	1/10W	
JR038	1-216-295-00	METAL GLAZE	0	5%	1/10W	
JR039	1-216-295-00	METAL GLAZE	0	5%	1/10W	
JR040	1-216-295-00	METAL GLAZE	0	5%	1/10W	

When indicating parts by reference number, please include the board name.

No.	Part No.	Description				Remark
JR041	1-216-295-00	METAL GLAZE	0	5%	1/10W	
JR042	1-216-295-00	METAL GLAZE	0	5%	1/10W	
JR043	1-216-295-00	METAL GLAZE	0	5%	1/10W	
JR044	1-216-295-00	METAL GLAZE	0	5%	1/10W	
JR045	1-216-295-00	METAL GLAZE	0	5%	1/10W	
JR046	1-216-295-00	METAL GLAZE	0	5%	1/10W	
JR047	1-216-295-00	METAL GLAZE	0	5%	1/10W	
JR053	1-216-295-00	METAL GLAZE	0	5%	1/10W	
JR054	1-216-295-00	METAL GLAZE	0	5%	1/10W	
JR055	1-216-296-00	METAL GLAZE	0	5%	1/8W	
JR056	1-216-296-00	METAL GLAZE	0	5%	1/8W	
JR057	1-216-296-00	METAL GLAZE	0	5%	1/8W	
JR058	1-216-296-00	METAL GLAZE	0	5%	1/8W	
JR059	1-216-296-00	METAL GLAZE	0	5%	1/8W	
JR060	1-216-296-00	METAL GLAZE	0	5%	1/8W	
JR061	1-216-296-00	METAL GLAZE	0	5%	1/8W	
JR062	1-216-296-00	METAL GLAZE	0	5%	1/8W	
JR063	1-216-296-00	METAL GLAZE	0	5%	1/8W	
JR064	1-216-296-00	METAL GLAZE	0	5%	1/8W	
JR065	1-216-296-00	METAL GLAZE	0	5%	1/8W	
JR066	1-216-296-00	METAL GLAZE	0	5%	1/8W	
JR067	1-216-296-00	METAL GLAZE	0	5%	1/8W	
JR068	1-216-296-00	METAL GLAZE	0	5%	1/8W	
JR069	1-216-296-00	METAL GLAZE	0	5%	1/8W	
JR070	1-216-296-00	METAL GLAZE	0	5%	1/8W	
JR072	1-216-296-00	METAL GLAZE	0	5%	1/8W	
JR074	1-216-296-00	METAL GLAZE	0	5%	1/8W	
JR075	1-216-296-00	METAL GLAZE	0	5%	1/8W	
JR076	1-216-296-00	METAL GLAZE	0	5%	1/8W	
JR077	1-216-296-00	METAL GLAZE	0	5%	1/8W	
JR078	1-216-296-00	METAL GLAZE	0	5%	1/8W	
JR079	1-216-296-00	METAL GLAZE	0	5%	1/8W	
JR080	1-216-296-00	METAL GLAZE	0	5%	1/8W	
JR081	1-216-296-00	METAL GLAZE	0	5%	1/8W	
JR082	1-216-296-00	METAL GLAZE	0	5%	1/8W	
JR083	1-216-296-00	METAL GLAZE	0	5%	1/8W	
JR084	1-216-296-00	METAL GLAZE	0	5%	1/8W	
JR085	1-216-296-00	METAL GLAZE	0	5%	1/8W	
JR086	1-216-296-00	METAL GLAZE	0	5%	1/8W	
JR087	1-216-296-00	METAL GLAZE	0	5%	1/8W	
JR089	1-216-296-00	METAL GLAZE	0	5%	1/8W	
JR090	1-216-296-00	METAL GLAZE	0	5%	1/8W	
JR091	1-216-296-00	METAL GLAZE	0	5%	1/8W	

COIL

L921	1-410-515-11	INDUCTOR	33UH	

TRANSISTOR

Q201	8-729-901-06	TRANSISTOR	DTA144EK
Q203	8-729-100-66	TRANSISTOR	2SC1623
Q204	8-729-901-01	TRANSISTOR	DTC144EK
Q208 ⚠	8-729-113-32	TRANSISTOR	2SB733
Q209	8-729-100-66	TRANSISTOR	2SC1623
Q210	8-729-100-66	TRANSISTOR	2SC1623
Q211	8-729-100-76	TRANSISTOR	2SA812
Q212	8-729-100-76	TRANSISTOR	2SA812
Q213 ⚠	8-729-177-32	TRANSISTOR	2SD773
Q301	8-729-602-00	TRANSISTOR	2SK433-C
Q302	8-729-100-66	TRANSISTOR	2SC1623
Q401	8-729-602-00	TRANSISTOR	2SK433C
Q402	8-729-100-66	TRANSISTOR	2SC1623
Q502	8-729-901-01	TRANSISTOR	DTC144EK
Q701	8-729-100-66	TRANSISTOR	2SC1623
Q801	8-729-100-66	TRANSISTOR	2SC1623
Q802	8-729-100-76	TRANSISTOR	2SA812
Q803	8-729-100-66	TRANSISTOR	2SC1623
Q821	8-729-100-66	TRANSISTOR	2SC1623
Q822	8-729-100-76	TRANSISTOR	2SA812
Q823	8-729-100-66	TRANSISTOR	2SC1623
Q901	8-729-100-76	TRANSISTOR	2SA812

RESISTOR

R102	1-216-073-00	METAL GLAZE	10K	5%	1/10W
R104	1-216-081-00	METAL GLAZE	22K	5%	1/10W
R107	1-216-073-00	METAL GLAZE	10K	5%	1/10W
R110	1-216-073-00	METAL GLAZE	10K	5%	1/10W
R113	1-216-044-00	METAL GLAZE	620	5%	1/10W
R201	1-216-061-00	METAL GLAZE	3.3K	5%	1/10W
R205	1-216-097-00	METAL GLAZE	100K	5%	1/10W
R206	1-216-097-00	METAL GLAZE	100K	5%	1/10W
R207	1-216-097-00	METAL GLAZE	100K	5%	1/10W
R210	1-216-085-00	METAL GLAZE	33K	5%	1/10W
R211	1-216-073-00	METAL GLAZE	10K	5%	1/10W
R216	1-216-097-00	METAL GLAZE	100K	5%	1/10W
R217	1-216-097-00	METAL GLAZE	100K	5%	1/10W
R218	1-216-097-00	METAL GLAZE	100K	5%	1/10W
R220	1-216-081-00	METAL GLAZE	22K	5%	1/10W
R221	1-216-089-00	METAL GLAZE	47K	5%	1/10W
R230	1-216-061-00	METAL GLAZE	3.3K	5%	1/10W
R233	1-216-069-00	METAL GLAZE	6.8K	5%	1/10W
R236	1-216-071-00	METAL GLAZE	8.2K	5%	1/10W
R237	1-216-073-00	METAL GLAZE	10K	5%	1/10W
R238	1-216-061-00	METAL GLAZE	3.3K	5%	1/10W
R240	1-216-061-00	METAL GLAZE	3.3K	5%	1/10W
R241	1-216-074-00	METAL GLAZE	11K	5%	1/10W
R242	1-216-061-00	METAL GLAZE	3.3K	5%	1/10W
R244	1-216-081-00	METAL GLAZE	22K	5%	1/10W
R305	1-216-295-00	METAL GLAZE	0	5%	1/10W
R307	1-216-079-00	METAL GLAZE	18K	5%	1/10W
R309	1-216-093-00	METAL GLAZE	68K	5%	1/10W
R310	1-216-099-00	METAL GLAZE	120K	5%	1/10W
R316	1-216-063-00	METAL GLAZE	3.9K	5%	1/10W
R319	1-249-437-11	CARBON	47K	5%	1/4W
R320	1-249-440-11	CARBON	82K	5%	1/4W
R321	1-216-001-00	METAL GLAZE	10	5%	1/10W
R322	1-216-101-00	METAL GLAZE	150K	5%	1/10W

The components identified by mark ⚠ or dotted line with mark ⚠ are critical for safety.
Replace only with part number specified.

Les composants identifiés par une marque ⚠ sont critiques pour la sécurité.
Ne les remplacer que par une pièce portant le numéro spécifé.

When indicating parts by reference number, please include the board name.

No.	Part No.	Description				Remark
R327	1-216-059-00	METAL GLAZE	2.7K	5%	1/10W	
R330	1-216-053-00	METAL GLAZE	1.5K	5%	1/10W	
R331	1-216-025-00	METAL GLAZE	100	5%	1/10W	
R332	1-216-095-00	METAL GLAZE	82K	5%	1/10W	
R333	1-247-854-11	CARBON	9.1K	5%	1/4W	
R334	1-249-393-11	CARBON	10	5%	1/4W	
R335	1-249-414-11	CARBON	560	5%	1/4W	
R336	1-247-860-11	CARBON	16K	5%	1/4W	
R337	1-216-065-00	METAL GLAZE	4.7K	5%	1/10W	
R338	1-249-423-11	CARBON	3.3K	5%	1/4W	
R339	1-249-423-11	CARBON	3.3K	5%	1/4W	
R340	1-247-844-11	CARBON	3.6K	5%	1/4W	
R345	1-249-427-11	CARBON	6.8K	5%	1/4W	
R346	1-216-025-00	METAL GLAZE	100	5%	1/10W	
R347	1-216-748-11	METAL GLAZE	39K	5%	1/10W	
R349	1-216-069-00	METAL GLAZE	6.8K	5%	1/10W	
R350	1-249-425-11	CARBON	4.7K	5%	1/4W	
R351	1-249-423-11	CARBON	3.3K	5%	1/4W	
R360	1-247-828-11	CARBON	750	5%	1/4W	
R362	1-247-858-11	CARBON	13K	5%	1/4W	
R363	1-249-432-11	CARBON	18K	5%	1/4W	
R370	1-216-059-00	METAL GLAZE	2.7K	5%	1/10W	
R407	1-216-079-00	METAL GLAZE	18K	5%	1/10W	
R409	1-216-093-00	METAL GLAZE	68K	5%	1/10W	
R410	1-216-099-00	METAL GLAZE	120K	5%	1/10W	
R416	1-216-063-00	METAL GLAZE	3.9K	5%	1/10W	
R419	1-249-437-11	CARBON	47K	5%	1/4W	
R420	1-249-440-11	CARBON	82K	5%	1/4W	
R421	1-216-001-00	METAL GLAZE	10	5%	1/10W	
R422	1-216-101-00	METAL GLAZE	150K	5%	1/10W	
R427	1-216-059-00	METAL GLAZE	2.7K	5%	1/10W	
R430	1-216-053-00	METAL GLAZE	1.5K	5%	1/10W	
R431	1-216-025-00	METAL GLAZE	100	5%	1/10W	
R432	1-216-095-00	METAL GLAZE	82K	5%	1/10W	
R433	1-247-854-11	CARBON	9.1K	5%	1/4W	
R435	1-249-414-11	CARBON	560	5%	1/4W	
R436	1-247-860-11	CARBON	16K	5%	1/4W	
R437	1-216-065-00	METAL GLAZE	4.7K	5%	1/10W	
R438	1-216-061-00	METAL GLAZE	3.3K	5%	1/10W	
R439	1-249-423-11	CARBON	3.3K	5%	1/4W	
R440	1-247-844-11	CARBON	3.6K	5%	1/4W	
R445	1-249-427-11	CARBON	6.8K	5%	1/4W	
R446	1-216-025-00	METAL GLAZE	100	5%	1/10W	
R447	1-249-436-11	CARBON	39K	5%	1/4W	
R449	1-216-069-00	METAL GLAZE	6.8K	5%	1/10W	
R450	1-249-425-11	CARBON	4.7K	5%	1/4W	
R451	1-249-423-11	CARBON	3.3K	5%	1/4W	
R460	1-247-828-11	CARBON	750	5%	1/4W	
R462	1-247-858-11	CARBON	13K	5%	1/4W	
R463	1-249-432-11	CARBON	18K	5%	1/4W	
R470	1-216-059-00	METAL GLAZE	2.7K	5%	1/10W	
R501	1-216-075-00	METAL GLAZE	12K	5%	1/10W	
R502	1-216-065-00	METAL GLAZE	4.7K	5%	1/10W	
R503	1-216-063-00	METAL GLAZE	3.9K	5%	1/10W	
R505	1-216-063-00	METAL GLAZE	3.9K	5%	1/10W	
R506	1-216-049-00	METAL GLAZE	1K	5%	1/10W	
R562	1-216-069-00	METAL GLAZE	6.8K	5%	1/10W	
R563	1-216-067-00	METAL GLAZE	5.6K	5%	1/10W	
R564	1-216-065-00	METAL GLAZE	4.7K	5%	1/10W	
R565	1-216-089-00	METAL GLAZE	47K	5%	1/10W	
R566	1-216-073-00	METAL GLAZE	10K	5%	1/10W	
R570	1-216-047-00	METAL GLAZE	820	5%	1/10W	
R701	1-216-041-00	METAL GLAZE	470	5%	1/10W	
R801	1-216-057-00	METAL GLAZE	2.2K	5%	1/10W	
R802	1-216-063-00	METAL GLAZE	3.9K	5%	1/10W	
R803	1-216-077-00	METAL GLAZE	15K	5%	1/10W	
R804	1-216-073-00	METAL GLAZE	10K	5%	1/10W	
R805	1-216-097-00	METAL GLAZE	100K	5%	1/10W	
R806	1-216-063-00	METAL GLAZE	3.9K	5%	1/10W	
R807	1-216-074-00	METAL GLAZE	11K	5%	1/10W	
R808	1-216-053-00	METAL GLAZE	1.5K	5%	1/10W	
R809	1-216-041-00	METAL GLAZE	470	5%	1/10W	
R821	1-216-057-00	METAL GLAZE	2.2K	5%	1/10W	
R822	1-216-063-00	METAL GLAZE	3.9K	5%	1/10W	
R823	1-216-077-00	METAL GLAZE	15K	5%	1/10W	
R824	1-216-073-00	METAL GLAZE	10K	5%	1/10W	
R825	1-216-097-00	METAL GLAZE	100K	5%	1/10W	
R826	1-216-063-00	METAL GLAZE	3.9K	5%	1/10W	
R827	1-216-074-00	METAL GLAZE	11K	5%	1/10W	
R828	1-216-047-00	METAL GLAZE	820	5%	1/10W	
R829	1-216-041-00	METAL GLAZE	470	5%	1/10W	
R901	1-216-073-00	METAL GLAZE	10K	5%	1/10W	
R902	1-216-066-00	METAL GLAZE	5.1K	5%	1/10W	
R904	1-216-089-00	METAL GLAZE	47K	5%	1/10W	
R905	1-216-089-00	METAL GLAZE	47K	5%	1/10W	
R906	1-216-081-00	METAL GLAZE	22K	5%	1/10W	
R907	1-216-073-00	METAL GLAZE	10K	5%	1/10W	
R908	1-216-065-00	METAL GLAZE	4.7K	5%	1/10W	
R909	1-216-089-00	METAL GLAZE	47K	5%	1/10W	
R951	1-216-073-00	METAL GLAZE	10K	5%	1/10W	

****

A-7068-113-A AD-12 BOARD, COMPLETE
****

*1-622-010-11 AD-12 BOARD

CAPACITOR

C701	1-124-638-11	ELECT	22MF	20%	6.3V
C703	1-163-117-00	CERAMIC CHIP	100PF	5%	50V
C705	1-124-638-11	ELECT	22MF	20%	6.3V
C707	1-126-157-11	ELECT	10MF	20%	16V
C709	1-126-154-11	ELECT	47MF	20%	6.3V
C710	1-163-021-00	CERAMIC CHIP	0.01MF		50V
C713	1-126-177-11	ELECT	100MF	20%	6.3V
C715	1-126-177-11	ELECT	100MF	20%	6.3V

When indicating parts by reference number, please include the board name.

No.	Part No.	Description			Remark
C716	1-126-157-11	ELECT	10MF	20%	16V
C717	1-126-177-11	ELECT	100MF	20%	6.3V
C718	1-103-709-00	POLYSTYRENE	220PF	5%	50V
C719	1-163-021-00	CERAMIC CHIP	0.01MF		50V
C720	1-163-021-00	CERAMIC CHIP	0.01MF		50V
C721	1-126-154-11	ELECT	47MF	20%	6.3V
C722	1-163-021-00	CERAMIC CHIP	0.01MF		50V
C751	1-124-638-11	ELECT	22MF	20%	6.3V
C753	1-163-117-00	CERAMIC CHIP	100PF	5%	50V
C755	1-124-638-11	ELECT	22MF	20%	6.3V
C757	1-126-157-11	ELECT	10MF	20%	16V
		CONNECTOR			
CN701	1-563-533-11	CONNECTOR, BOARD TO BOARD 15P			
		IC			
IC702	8-759-914-44	IC TL431CLPB			
		COIL			
L701	1-408-421-00	INDUCTOR	100UH		
		RESISTOR			
R701	1-216-083-00	METAL GLAZE	27K	5%	1/10W
R703	1-216-748-11	METAL GLAZE	39K	5%	1/10W
R711	1-216-057-00	METAL GLAZE	2.2K	5%	1/10W
R713	1-216-057-00	METAL GLAZE	2.2K	5%	1/10W
R717	1-216-117-00	METAL GLAZE	680K	5%	1/10W
R718	1-216-029-00	METAL GLAZE	150	5%	1/10W
R719	1-216-022-00	METAL GLAZE	75	5%	1/10W
R720	1-216-039-00	METAL GLAZE	390	5%	1/10W
R721	1-216-049-00	METAL GLAZE	1K	5%	1/10W
R722	1-216-653-11	METAL CHIP	1.2K	0.50%	1/10W
R723	1-216-661-11	METAL CHIP	2.7K	0.50%	1/10W
R724	1-215-485-00	METAL	470K	1%	1/6W
R751	1-216-083-00	METAL GLAZE	27K	5%	1/10W
R753	1-216-748-11	METAL GLAZE	39K	5%	1/10W
R761	1-216-057-00	METAL GLAZE	2.2K	5%	1/10W
R763	1-216-057-00	METAL GLAZE	2.2K	5%	1/10W
		VARIABLE RESISTOR			
RV701	1-228-995-00	RES, ADJ, CARBON 22K			
RV703	1-228-991-00	RES, ADJ, CARBON 2.2K			
RV705	1-228-999-00	RES, ADJ, CARBON 470K			
RV751	1-228-995-00	RES, ADJ, CARBON 22K			
RV753	1-228-991-00	RES, ADJ, CARBON 2.2K			

No.	Part No.	Description			Remark
	*A-7068-021-A	AF-20 BOARD, COMPLETE			
		**********			
	*1-619-037-11	AF-20 BOARD			
		CAPACITOR			
C501	1-163-021-00	CERAMIC CHIP	0.01MF		50V
C502	1-163-021-00	CERAMIC CHIP	0.01MF		50V
C503	1-163-137-00	CERAMIC CHIP	680PF	10%	50V
C504	1-124-465-00	ELECT	0.47MF	20%	50V
C505	1-163-145-00	CERAMIC CHIP	0.0015MF	10%	50V
C506	1-163-016-00	CERAMIC CHIP	0.0039MF	10%	50V
C507	1-163-125-00	CERAMIC CHIP	220PF	5%	50V
C508	1-164-161-11	CERAMIC CHIP	0.0022MF	10%	50V
C509	1-126-177-11	ELECT	100MF	20%	6.3V
C510	1-163-036-00	CERAMIC CHIP	0.068MF		50V
C511	1-163-021-00	CERAMIC CHIP	0.01MF		50V
C512	1-124-257-00	ELECT	2.2MF	20%	50V
C513	1-126-154-11	ELECT	47MF	20%	6.3V
C514	1-126-094-11	ELECT	4.7MF	20%	25V
C515	1-163-133-00	CERAMIC CHIP	470PF	5%	50V
C516	1-126-177-11	ELECT	100MF	20%	6.3V
C517	1-163-088-00	CERAMIC CHIP	5PF	0.25PF	50V
C518	1-163-017-00	CERAMIC CHIP	0.0047MF	10%	50V
C519	1-163-125-00	CERAMIC CHIP	220PF	5%	50V
C520	1-163-079-00	CERAMIC CHIP	0.039MF	10%	25V
C521	1-163-020-00	CERAMIC CHIP	0.0082MF	10%	50V
C522	1-163-137-00	CERAMIC CHIP	680PF	10%	50V
C523	1-126-160-11	ELECT	1MF	20%	50V
C524	1-126-157-11	ELECT	10MF	20%	16V
C525	1-126-157-11	ELECT	10MF	20%	16V
C526	1-124-638-11	ELECT	22MF	20%	6.3V
C527	1-126-177-11	ELECT	100MF	20%	6.3V
C529	1-124-438-00	ELECT	1MF	20%	50V
C530	1-163-021-00	CERAMIC CHIP	0.01MF		50V
C531	1-126-177-11	ELECT	100MF	20%	6.3V
C533	1-163-015-00	CERAMIC CHIP	0.0033MF	10%	50V
C534	1-163-109-00	CERAMIC CHIP	47PF	5%	50V
C535	1-164-161-11	CERAMIC CHIP	0.0022MF	10%	50V
C536	1-163-021-00	CERAMIC CHIP	0.01MF		50V
C539	1-163-088-00	CERAMIC CHIP	5PF	0.25PF	50V
		CONNECTOR			
CN501	*1-564-788-11	PIN, CONNECTOR 10P			
CN502	*1-564-788-11	PIN, CONNECTOR 10P			
		IC			
IC501	8-752-013-71	IC CX20137A			
		COIL			
L501	1-408-948-00	INDUCTOR	220UH		

When indicating parts by reference number, please include the board name.

No.	Part No.	Description				Remark
		TRANSISTOR				
Q502	8-729-220-93	TRANSISTOR 2SK209G				
Q503	8-729-901-01	TRANSISTOR DTC144EK				
		RESISTOR				
R501	1-216-065-00	METAL GLAZE	4.7K	5%	1/10W	
R502	1-216-065-00	METAL GLAZE	4.7K	5%	1/10W	
R503	1-216-065-00	METAL GLAZE	4.7K	5%	1/10W	
R504	1-216-121-00	METAL GLAZE	1M	5%	1/10W	
R505	1-216-107-00	METAL GLAZE	270K	5%	1/10W	
R506	1-249-416-11	CARBON	820	5%	1/4W	
R507	1-249-416-11	CARBON	820	5%	1/4W	
R508	1-216-097-00	METAL GLAZE	100K	5%	1/10W	
R509	1-216-075-00	METAL GLAZE	12K	5%	1/10W	
R510	1-216-063-00	METAL GLAZE	3.9K	5%	1/10W	
R511	1-216-057-00	METAL GLAZE	2.2K	5%	1/10W	
R512	1-216-045-00	METAL GLAZE	680	5%	1/10W	
R513	1-216-059-00	METAL GLAZE	2.7K	5%	1/10W	
R514	1-216-061-00	METAL GLAZE	3.3K	5%	1/10W	
R515	1-216-061-00	METAL GLAZE	3.3K	5%	1/10W	
R516	1-216-059-00	METAL GLAZE	2.7K	5%	1/10W	
R517	1-216-073-00	METAL GLAZE	10K	5%	1/10W	
R519	1-216-079-00	METAL GLAZE	18K	5%	1/10W	
R520	1-216-121-00	METAL GLAZE	1M	5%	1/10W	
R521	1-216-079-00	METAL GLAZE	18K	5%	1/10W	
R522	1-216-097-00	METAL GLAZE	100K	5%	1/10W	
R523	1-216-089-00	METAL GLAZE	47K	5%	1/10W	
R524	1-216-083-00	METAL GLAZE	27K	5%	1/10W	
R525	1-216-079-00	METAL GLAZE	18K	5%	1/10W	
R526	1-216-079-00	METAL GLAZE	18K	5%	1/10W	
R527	1-216-057-00	METAL GLAZE	2.2K	5%	1/10W	
R528	1-216-059-00	METAL GLAZE	2.7K	5%	1/10W	
R530	1-216-049-00	METAL GLAZE	1K	5%	1/10W	
		VARIABLE RESISTOR				
RV501	1-228-995-00	RES, ADJ, CARBON 22K				
RV503	1-228-994-00	RES, ADJ, CARBON 10K				

****

*A-7068-148-A MK-2 BOARD, COMPLETE
****

		CAPACITOR			
C807	1-161-055-00	CERAMIC	0.022MF	10%	25V
C808	1-161-055-00	CERAMIC	0.022MF	10%	25V
C810	1-130-471-00	FILM	0.001MF	5%	50V
C827	1-161-055-00	CERAMIC	0.022MF	10%	25V
C828	1-161-055-00	CERAMIC	0.022MF	10%	25V
C830	1-130-471-00	FILM	0.001MF	5%	50V
C843	1-124-443-00	ELECT	100MF	20%	10V
C851	1-101-004-00	CERAMIC	0.01MF		50V

No.	Part No.	Description				Remark
		CONNECTOR				
CN803	*1-564-788-11	PIN, CONNECTOR 10P				
		IC				
IC801	8-759-913-62	IC IR3N05				
IC821	8-759-913-62	IC IR3N05				
IC851	8-759-206-68	IC TC40103BP				
		TRANSISTOR				
Q851	8-729-119-78	TRANSISTOR 2SC2785HFE				
		RESISTOR				
R801	1-249-398-11	CARBON	27	5%	1/4W	
R810	1-249-421-11	CARBON	2.2K	5%	1/4W	
R812	1-249-436-11	CARBON	39K	5%	1/4W	
R830	1-249-421-11	CARBON	2.2K	5%	1/4W	
R851	1-249-435-11	CARBON	33K	5%	1/4W	
R852	1-249-435-11	CARBON	33K	5%	1/4W	
R853	1-249-441-11	CARBON	100K	5%	1/4W	
		VARIABLE RESISTOR				
RV801	1-228-990-00	RES, ADJ, CARBON 1K				
RV821	1-228-990-00	RES, ADJ, CARBON 1K				

****

*A-7060-913-A NR-6 BOARD, COMPLETE
****

		CAPACITOR			
C601	1-126-177-11	ELECT	100MF	20%	6.3V
C602	1-124-446-11	ELECT	47MF	20%	10V
C603	1-126-177-11	ELECT	100MF	20%	6.3V
C604	1-126-177-11	ELECT	100MF	20%	6.3V
C605	1-130-490-11	MYLAR	0.039MF	5%	50V
C606	1-163-125-00	CERAMIC CHIP	220PF	10%	50V
C607	1-163-088-00	CERAMIC CHIP	5PF	0.25PF	50V
C608	1-130-479-00	MYLAR	0.0047MF	5%	50V
C609	1-163-020-00	CERAMIC CHIP	0.0082MF	10%	50V
C610	1-124-257-00	ELECT	2.2MF	20%	50V
C611	1-163-137-00	CERAMIC CHIP	680PF	10%	50V
C612	1-127-558-11	ELECT(SOLID)	10MF	20%	6.3V
C613	1-127-502-00	ELECT(SOLID)	0.22MF	20%	25V
C616	1-126-177-11	ELECT	100MF	20%	6.3V
C618	1-126-177-11	ELECT	100MF	20%	6.3V
C651	1-126-177-11	ELECT	100MF	20%	6.3V
C652	1-124-446-11	ELECT	47MF	20%	10V
C653	1-126-177-11	ELECT	100MF	20%	6.3V
C654	1-126-177-11	ELECT	100MF	20%	6.3V
C655	1-130-490-11	MYLAR	0.039MF	5%	50V
C656	1-163-125-00	CERAMIC CHIP	220PF	10%	50V
C657	1-163-088-00	CERAMIC CHIP	5PF	0.25PF	50V

When indicating parts by reference number, please include the board name.

No.	Part No.	Description				Remark
C658	1-130-479-00	MYLAR	0.0047MF	5%	50V	
C659	1-163-020-00	CERAMIC CHIP	0.0082MF	10%	50V	
C660	1-124-257-00	ELECT	2.2MF	20%	50V	
C661	1-163-137-00	CERAMIC CHIP	680PF	10%	50V	
C662	1-127-558-11	ELECT(SOLID)	10MF	20%	6.3V	
C663	1-127-502-00	ELECT(SOLID)	0.22MF	20%	25V	
		CONNECTOR				
CN601	*1-565-002-11	PIN, CONNECTOR 15P				
		IC				
IC601	8-752-009-90	IC CX20099				
		RESISTOR				
R600	1-216-025-00	METAL GLAZE	100	5%	1/10W	
R601	1-216-073-00	METAL GLAZE	10K	5%	1/10W	
R602	1-216-073-00	METAL GLAZE	10K	5%	1/10W	
R603	1-216-009-00	METAL GLAZE	22	5%	1/10W	
R604	1-216-059-00	METAL GLAZE	2.7K	5%	1/10W	
R605	1-216-057-00	METAL GLAZE	2.2K	5%	1/10W	
R606	1-216-045-00	METAL GLAZE	680	5%	1/10W	
R607	1-216-075-00	METAL GLAZE	12K	5%	1/10W	
R608	1-216-063-00	METAL GLAZE	3.9K	5%	1/10W	
R609	1-216-061-00	METAL GLAZE	3.3K	5%	1/10W	
R610	1-216-059-00	METAL GLAZE	2.7K	5%	1/10W	
R611	1-216-061-00	METAL GLAZE	3.3K	5%	1/10W	
R612	1-216-065-00	METAL GLAZE	4.7K	5%	1/10W	
R614	1-216-065-00	METAL GLAZE	4.7K	5%	1/10W	
R650	1-216-025-00	METAL GLAZE	100	5%	1/10W	
R651	1-216-073-00	METAL GLAZE	10K	5%	1/10W	
R652	1-216-073-00	METAL GLAZE	10K	5%	1/10W	
R653	1-216-009-00	METAL GLAZE	22	5%	1/10W	
R654	1-216-059-00	METAL GLAZE	2.7K	5%	1/10W	
R655	1-216-057-00	METAL GLAZE	2.2K	5%	1/10W	
R656	1-216-045-00	METAL GLAZE	680	5%	1/10W	
R657	1-216-075-00	METAL GLAZE	12K	5%	1/10W	
R658	1-216-063-00	METAL GLAZE	3.9K	5%	1/10W	
R659	1-216-061-00	METAL GLAZE	3.3K	5%	1/10W	
R660	1-216-059-00	METAL GLAZE	2.7K	5%	1/10W	
R661	1-216-061-00	METAL GLAZE	3.3K	5%	1/10W	
R662	1-216-065-00	METAL GLAZE	4.7K	5%	1/10W	

****

*A-7070-024-A LD-1 BOARD, COMPLETE
****

DIODE

D901 8-719-928-54 DIODE GL-450S

****

No.	Part No.	Description	Remark
	A-7090-029-A	MS-4 BOARD, COMPLETE	
		**********	
	*1-506-485-11	PIN, CONNECTOR (HOOK TYPE)	
		CAPACITOR	
C902	1-163-038-00	CERAMIC CHIP 0.1MF	25V

****

LS-9 BOARD
****

*1-506-485-11 PIN, CONNECTOR (HOOK TYPE)

****

*1-621-998-11 TE-6 BOARD
****

*3-716-845-01 HOLDER (LEFT), SENSOR

TRANSISTOR

Q001 8-729-904-10 PT360FS

SWITCH

S001 1-570-112-11 SWITCH, LEAF (CASSETTE DOWN L)
S002 1-570-112-11 SWITCH, LEAF (LS TOP)

****

*1-621-997-11 TE-5 BOARD
****

*3-716-844-01 HOLDER (RIGHT), SENSOR

PILOT LAMP

PL001 1-518-621-21 LAMP, PILOT
PL002 1-518-621-21 LAMP, PILOT

TRANSISTOR

Q001 8-729-904-10 PT360FS

SWITCH

S001 1-570-112-11 SWITCH, LEAF (CASSETTE DOWN R)

****

*1-621-993-11 DL-15 BOARD
****

DIODE

D001 ⚠ 8-719-109-50 DIODE RD2.0ESB1
D301 ⚠ 8-719-309-XX DIODE D3SB10

The components identified by mark ⚠ or dotted line with mark ⚠ are critical for safety.
Replace only with part number specified.

Les composants identifiés par une marque ⚠ sont critiques pour la sécurité.
Ne les remplacer que par une pièce portant le numéro spécifé.

When indicating parts by reference number, please include the board name.

No.	Part No.	Description	Remark
		IC	
IC001 ⚠	8-759-803-56	IC L7808ML	
		TRANSISTOR	
Q001	8-729-900-80	TRANSISTOR DTC114ES	
		RESISTOR	
R001	1-249-417-11	CARBON 1K 5% 1/4W	

****

*1-621-992-11 DO-1 BOARD
****

		TRANSISTOR	
Q501 ⚠	8-729-303-61	TRANSISTOR 2SC3851	
Q502 ⚠	8-729-804-67	TRANSISTOR 2SB1133-R	

****

*A-7070-324-A DT-63 BOARD, COMPLETE
****

*1-621-994-11 DT-63 BOARD

		CAPACITOR			
C102	1-124-771-00	ELECT	6800MF	20%	25V
C103	1-123-334-00	ELECT	220MF	20%	25V
C104	1-123-332-00	ELECT	47MF	20%	16V
C105	1-123-332-00	ELECT	47MF	20%	16V
C110	1-125-445-11	DOUBLE LAYERS	0.22F		5.5V
C111	1-124-931-11	ELECT	47MF	20%	100V
C112	1-124-931-11	ELECT	47MF	20%	100V
C114	1-108-634-11	MYLAR	0.047MF	10%	100V
C115	1-123-334-00	ELECT	220MF	20%	25V
		CONNECTOR			
CN102	*1-560-893-00	PIN, CONNECTOR 5P			
CN104	*1-560-893-00	PIN, CONNECTOR 5P			
CN105	*1-560-891-00	PIN, CONNECTOR 3P			
CN106	*1-560-896-00	PIN, CONNECTOR 8P			
CN107	*1-560-893-00	PIN, CONNECTOR 5P			
CN108	*1-560-891-00	PIN, CONNECTOR 3P			
CN203	*1-560-894-00	PIN, CONNECTOR 6P			
		DIODE			
D103 ⚠	8-719-911-19	DIODE 1SS119TD			
D104 ⚠	8-719-911-19	DIODE 1SS119TD			
D106 ⚠	8-719-110-16	DIODE RD10ES-B1			
D107 ⚠	8-719-908-03	DIODE GP08D			
D108	8-719-200-02	DIODE 10E-1			
D109	8-719-110-42	DIODE RD15ES-B3			
D110	8-719-109-93	DIODE RD6.2ES-B2			
D111	8-719-107-94	DIODE 1SS202-1			
D112 ⚠	8-719-110-90	DIODE RD39ES-B4			
D114 ⚠	8-719-109-97	DIODE RD6.8ES-B3			
D115	8-719-110-42	DIODE RD15ESB3			
D116 ⚠	8-719-110-16	DIODE RD10ES-B1			
D117	8-719-109-75	DIODE RD4.7ES-B2			
D119	8-719-911-19	DIODE 1SS119TD			
		FUSE			
F103 ⚠	1-532-780-21	FUSE, MICRO (SECONDARY) (2.5A)			
		IC LINK			
PS101 ⚠	1-532-727-11	LINK, IC (0.25A)			
PS102 ⚠	1-532-679-00	LINK, IC (0.4A)			
PS104 ⚠	1-532-605-00	LINK, IC (0.6A)			
		TRANSISTOR			
Q103 ⚠	8-729-103-43	TRANSISTOR 2SB734			
Q106 ⚠	8-729-177-32	TRANSISTOR 2SD773			
Q107 ⚠	8-729-177-32	TRANSISTOR 2SD773			
		RESISTOR			
R103	1-249-421-11	CARBON	2.2K	5%	1/4W
R104	1-249-421-11	CARBON	2.2K	5%	1/4W
R105 ⚠	1-246-449-25	CARBON	100	5%	1/4W
R107	1-249-425-11	CARBON	4.7K	5%	1/4W
R108	1-249-434-11	CARBON	27K	5%	1/4W
R109	1-249-441-11	CARBON	100K	5%	1/4W
R111	1-249-431-11	CARBON	15K	5%	1/4W
R112	1-249-422-11	CARBON	2.7K	5%	1/4W
R113	1-249-416-11	CARBON	820	5%	1/4W
R117 ⚠	1-212-966-00	FUSIBLE	22	5%	1/2W F

****

MISCELLANEOUS
****

	1-464-784-11	ENCODER, ROTARY
	1-464-785-71	SWITCH BLOCK, CONTROL
⚠	1-466-156-11	MODULATOR, RF (RFU1011)
⚠	1-526-882-00	OUTLET, AC
	1-535-535-11	TERMINAL, SHAFT GROUND
⚠	1-551-478-00	CORD, POWER
C901	1-161-057-00	CAP, CERAMIC 0.033MF X
M901	8-835-282-03	MOTOR, DC U-11A (REEL)
M903	8-835-138-01	MOTOR, DC (DNR-5301B) (CONTROL)
M904	A-7040-065-A	MOTOR ASSY, L (THREADING)
M905	A-7090-661-A	MOTOR BLOCK ASSY, LS (LINEAR SKATE)
M906	8-835-247-01	MOTOR, DC BHF-2804D (CAPSTAN)
PM901 ⚠	1-454-377-31	SOLENOID, PLUNGER (BRAKE)
S901	1-571-680-21	SWITCH, PUSH (3 KEY) (RECOG R)
S902	1-554-942-11	SWITCH, PUSH (RECOG L)
T401 ⚠	1-448-837-11	TRANSFORMER, POWER

The components identified by mark ⚠ or dotted line with mark ⚠ are critical for safety.
Replace only with part number specified.

Les composants identifiés par une marque ⚠ sont critiques pour la sécurité.
Ne les remplacer que par une pièce portant le numéro spécifé.

When indicating parts by reference number, please include the board name.

ACCESSORIES AND PACKING MATERIALS

Part No.	Description	Remark
A-6767-422-A	COMMANDER ASSY (RMT-424)	
1-417-139-11	MATCHING TRANSFORMER, ANTENNA (US)	
1-513-379-00	CONVERTER (EAC-25) (CND)	
1-551-086-31	CORD, CONNECTION	
1-558-076-41	CORD, CONNECTION	
1-558-543-11	CORD, CONNECTION	
1-559-457-11	CORD, CONNECTION	
*3-677-503-00	SHEET, PROTECTION	
*3-713-408-01	CASE, ACCESSORY	
*3-713-465-01	LID, ACCESSORY CASE	
*3-722-142-01	CUSHION (UPPER)	
*3-722-143-01	CUSHION (LOWER)	
*3-722-144-11	INDIVIDUAL CARTON	
3-786-709-21	MANUAL, INSTRUCTION	
3-786-709-31	MANUAL, INSTRUCTION (CND)	
8-883-112-29	V8-6CLHSP	

HARDWARE LIST

Part No.	Description	Remark
7-621-255-20	SCREW +P 2X4	
7-621-255-50	SCREW +P 2X8	
7-627-553-48	SCREW, PRECISION +P 2X4	
7-628-254-00	SCREW +PS 2.6X5	
7-682-549-09	SCREW +B 3X10	
7-685-101-11	SCREW +P 2X3 NON-SLIT TYPE2	
7-685-133-19	SCREW +P 2.6X6 TYPE1	
7-685-234-19	SCREW +KTP 2.6X8 TYPE2NON-SLIT	
7-685-646-79	SCREW +BVTP 3X8 TYPE2 IT-3	
7-685-648-79	SCREW +BVTP 3X12 TYPE2 IT-3	
7-621-255-15	SCREW +PTT 2X3 (S)	
7-621-255-45	SCREW +BVTT 2X6 (S)	
	STOP RING	
7-624-101-01	STOP RING 1.2 (E TYPE)	
7-624-102-04	STOP RING 1.5, TYPE -E	
7-624-105-04	STOP RING 2.3, TYPE -E	
7-624-106-04	STOP RING 3.0, TYPE -E	
7-624-190-71	STOP RING 5, TYPE-CS	
	STEEL BALL	
7-671-112-01	STEEL, BALL	

When indicating parts by reference number, please include the board name.

SECTION 7
MECHANICAL ADJUSTMENT

7-1. PREPARATION ITEMS FOR MECHANISM SECTION CHECKING, ADJUSTMENT AND REPLACEMENT

Note: Regarding removal of cabinet and respective boards, see Section 2. DISASSEMBLY.

7-1-1. LS Cassette Compartment Assembly and Operation without Tape Inserted

Note: The set will not operate if there is a strong light source near it.

1. Threading Method (See Fig. 7-1.)

1) Remove the front panel, upper case, and bottom plate according to Section 2. DISASSEMBLY, 2-1. and 2-2.
2) Remove the LS cassette compartment assembly according to Section 2. DISASSEMBLY, 2-16. (Do not remove the connectors.)
3) Place the tape over the pin emerging from the push switch ❶.
4) Place the cap ❷, etc., over the LED assembly.
5) Push the lock holder ❸ in the direction of arrow Ⓐ.
6) Short the leaf switch ❹ using a clip ❺, etc.
7) Connect the power supply and press the power button to turn on the power.

2. Putting into playback state (See Fig. 7-1.)

1) Perform "1. Threading Method".
2) Hook the rubber band ❻ between S reel and T reel.
3) Press the playback button, and when the T reel side starts to rotate, push the tension regulator arm assembly ❼ in the direction of the arrow Ⓑ. (At this time, the tension regulator band is released and S reel side rotates.)
4) Press the STOP button to stop.

3. Putting into recording state (See Fig. 7-1.)

2) Hook the rubber band ❻ between S reel and T reel.
3) Press the recording button, and when the T reel starts to rotate, push the tension regulator arm assembly ❼ in the direction of the arrow Ⓑ. (At this time, the tension regulator band is released and S reel rotates.)
4) Press the STOP button to stop.

4. Eject

1) Press the EJECT button.

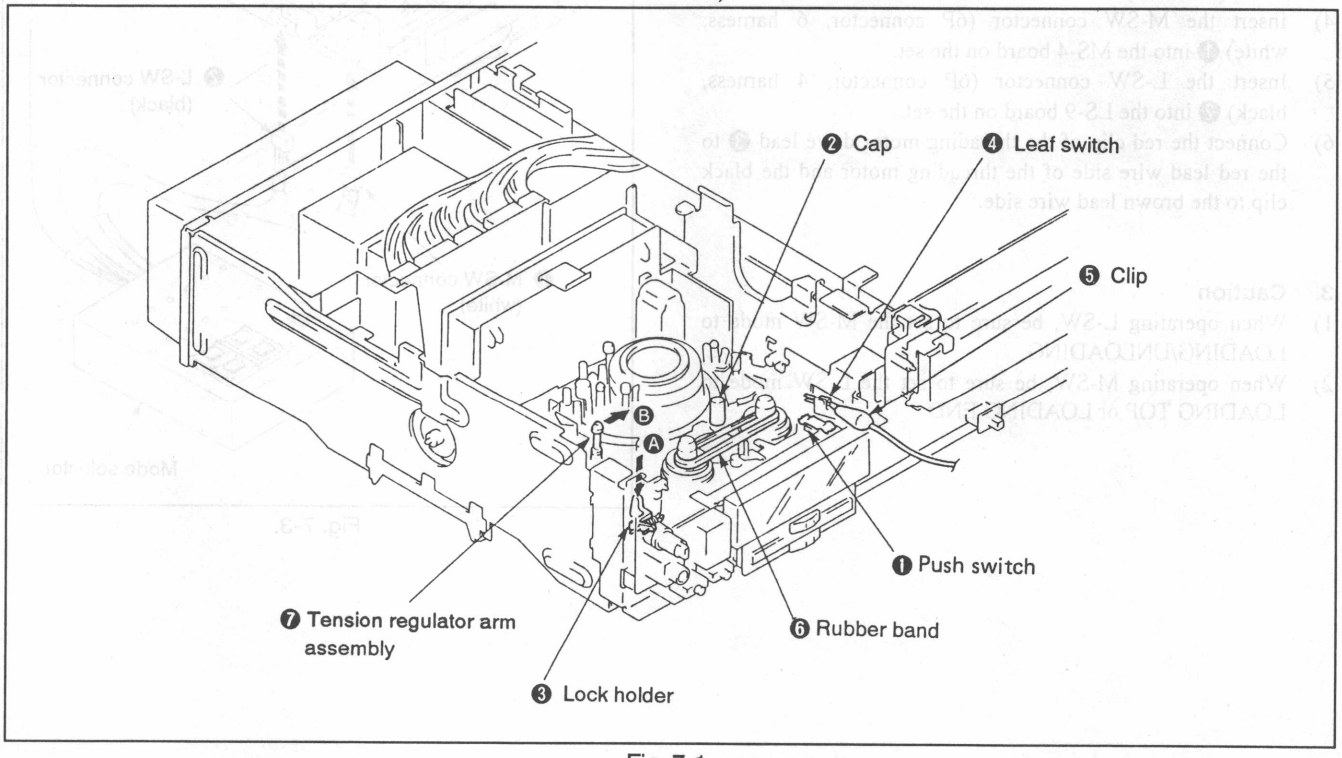

Fig. 7-1.

7-1-2. Handling of Mode Selector

1. Name of individual parts (Exterior)

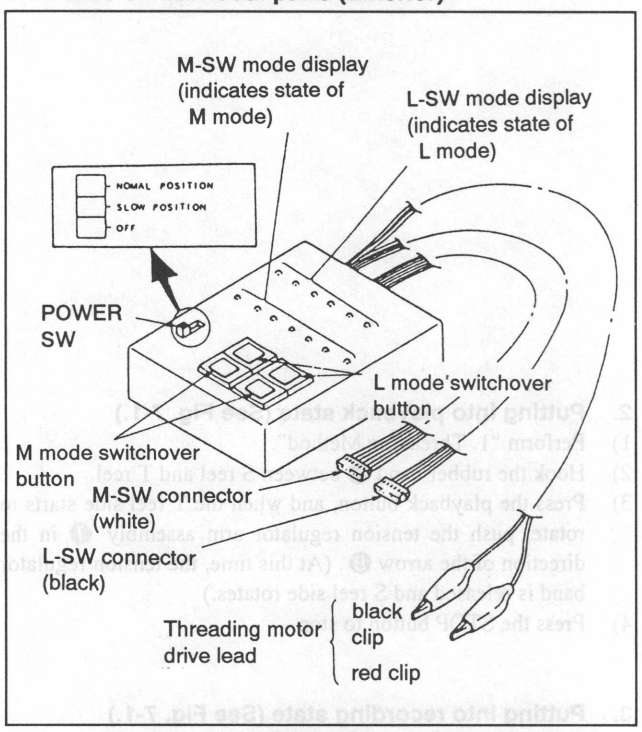

Fig. 7-2.

2. Connection (See Fig. 7-3.)

1) Remove the front panel, upper case and bottom plate according to Section 2. DISASSEMBLY 2-1., 2-2.
2) Remove the LS cassette compartment assembly according to Section 2. DISASSEMBLY 2-16. (Do not disconnect the connectors.)
3) Disconnect the connectors on the MS-4 board and LS-9 board (one each).
4) Insert the M-SW connector (6P connector, 6 harness, white) ❶ into the MS-4 board on the set.
5) Insert the L-SW connector (6P connector, 4 harness, black) ❷ into the LS-9 board on the set.
6) Connect the red clip of the threading motor drive lead ❸ to the red lead wire side of the threading motor and the black clip to the brown lead wire side.

3. Caution

1) When operating L-SW, be sure to set the M-SW mode to LOADING/UNLOADING.
2) When operating M-SW, be sure to set the L-SW mode to LOADING TOP or LOADING END.

4. Handling

BLANK lights up regardless of L MODE or M MODE when it is in neither mode during select.

1) L-MODE
   - When the right L-MODE switch button is pressed continuously, the display lights up from LOADING TOP → LOADING END, in order in right direction.
   - To go from LOADING END → LOADING TOP, press the left switch button continuously until the desired MODE is reached.
   - In slow position, the L mode operates more slowly than for normal position.
2) M-MODE
   - Set L-SW to LOADING TOP before performing EJECT.
   - Set L-SW to LOADING END to perform FF/REW → RVS or RVS → FF/REW.
   - When the right M-MODE switch button is pressed continuously, the display lights up from EJECT → RVS, in order in right direction.
   - To go from RVS → EJECT, press the left switch button continuously until the desired MODE is reached.

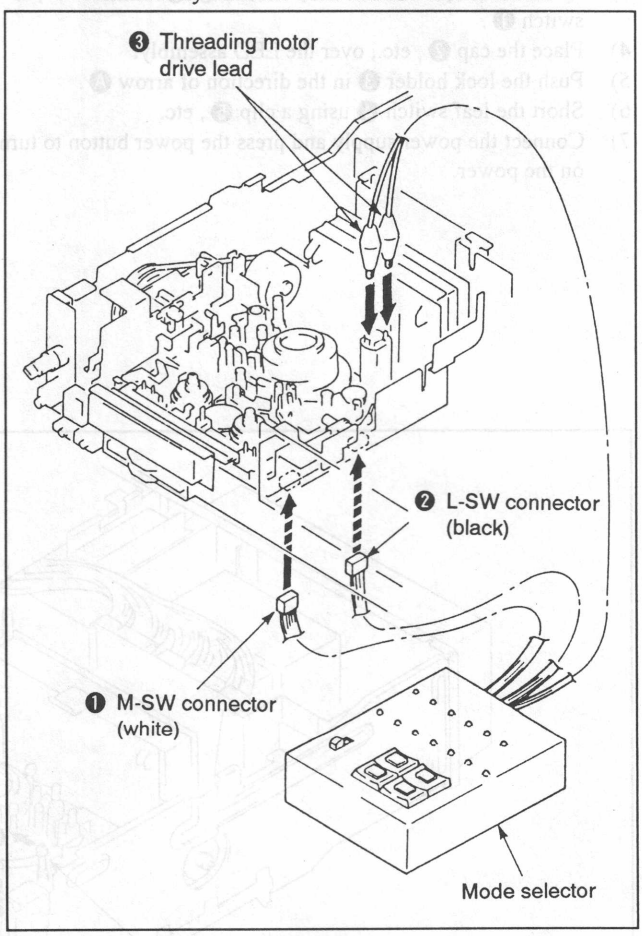

Fig. 7-3.

7-2. PERIODIC CHECK AND MAINTENANCE

Please perform the following periodic checks and maintenance in order to obtain optimum set function and performance, and to keep the mechanism and tape in good condition. Also, perform the maintenance below after repair, regardless of the length of time the set has been used by the user.

7-2-1. Cleaning of Rotary Drum Assembly

1) Press a chamois cloth (Ref. No. J-2) soaked in cleaning fluid (Ref. No. J-1) lightly against the rotary drum assembly, and slowly turn the rotary upper drum assembly counterclockwise by hand to clean.

Note: Do not use the power supply to rotate the motor, and do not rotate the motor clockwise by hand.
Also, there is a danger of damaging the head tip if the chamois cloth is moved vertically relative to the head tip (up/down direction of drum), so please follow the instruction above for cleaning.

7-2-2. Cleaning of Tape Path (See Fig. 7-4.)

1) Place the LS cassette compartment assembly in EJECT state, and clean the tape path (No. 1 to No. 11 guides, capstan shaft, pinch roller, IP roller guide) with a chamois cloth soaked in cleaning fluid.

7-2-3. Cleaning of Drive System

1) Clean the drive system (timing belt, surface of reel tables) with a cloth soaked in cleaning fluid.

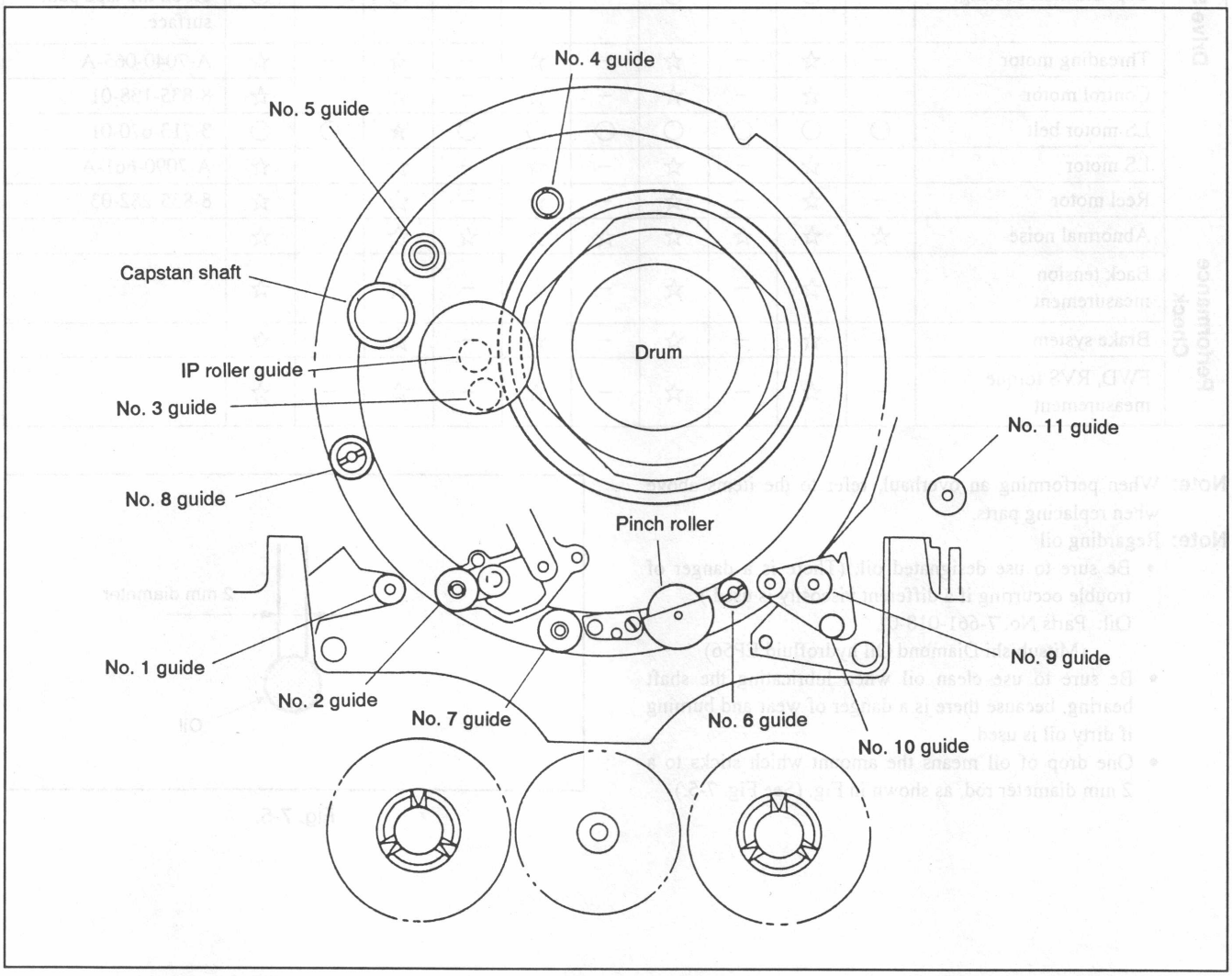

Fig. 7-4.

7-2-4. Periodic Check

Perform following according to number of hours of use.

○Cleaning ◎Lublication ★Replacement ☆Check

Location		Hours of Use (H)										Notes
		500	1,000	1,500	2,000	2,500	3,000	3,500	4,000	4,500	5,000	
Tape path	Cleaning of tape path surface	○	○	○	○	○	○	○	○	○	○	Be careful of oil
	Cleaning and degaussing of rotary drum assembly	○	○	○	○	○	○	○	○	○	○	Be careful of oil
Drive System	Threading motor belt	○	○	○	○	○	○	○	★	○	○	3-686-546-01 Replace here, or replace every two years.
	Brake plunger	–	–	–	○	–	–	–	○	–	–	1-454-377-31
	Capstan shaft bearing	–	◎	–	◎	–	◎	–	◎	–	◎	Be careful not to get oil on the tape path surface.
	Threading motor	–	☆	–	☆	–	☆	–	☆	–	☆	A-7040-065-A
	Control motor	–	☆	–	☆	–	☆	–	☆	–	☆	8-835-138-01
	LS motor belt	○	○	○	○	○	○	○	★	○	○	3-713-670-01
	LS motor	–	☆	–	☆	–	☆	–	☆	–	☆	A-7090-661-A
	Reel motor	–	☆	–	☆	–	☆	–	☆	–	☆	8-835-282-03
Performance Check	Abnormal noise	☆	☆	☆	☆	☆	☆	☆	☆	☆	☆	
	Back tension measurement	–	☆	–	☆	–	☆	–	☆	–	☆	
	Brake system	–	☆	–	☆	–	☆	–	☆	–	☆	
	FWD, RVS torque measurement	–	☆	–	☆	–	☆	–	☆	–	☆	

Note: When performing an overhaul, refer to the items above when replacing parts.

Note: Regarding oil

- Be sure to use designated oil. (There is a danger of trouble occurring if a different viscosity is used.)
  Oil: Parts No. 7-661-018-01
  (Mitsubishi Diamond Oil hydrofluid EP56)
- Be sure to use clean oil when lubricating the shaft bearing, because there is a danger of wear and burning if dirty oil is used.
- One drop of oil means the amount which sticks to a 2 mm diameter rod, as shown in Fig. (See Fig. 7-5.)

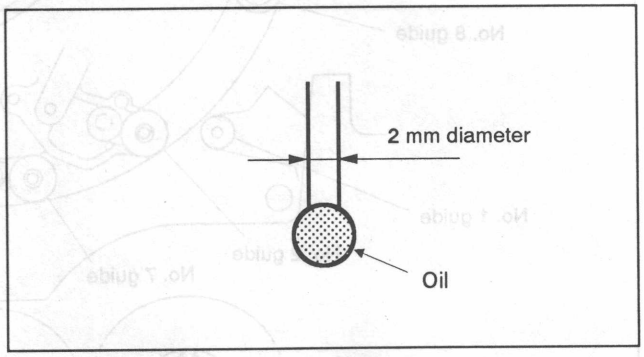

Fig. 7-5.

7-2-5. Service Jig Table

Ref. No.	Name	Part No.Jig	Use	Notes
J-1	Cleaning fluid	Y-2031-001-1		
J-2	Chamois cloth	2-034-697-00		
J-3	Head degausser	Commercially sold		
J-4	Small adjustment mirror, Spare mirror	J-6080-029-A J-6080-030-1	SL-5052	Tape path
J-5	Alignment tape(WR5-7NE)	8-967-995-13		Tape path
J-6	Dial tension gauge	J-6080-827-A		Various torque measurements
J-7	Tension measurement reel	J-6080-831-A		with ϕ 30 tape
J-8	Tension measurement reel	J-6080-832-A		with ϕ 16 string
J-9	No.10 gear phase jig	J-6080-823-A	GD-2047	
J-10	No.6 guide lock screwdriver	J-6080-826-A		
J-11	Rotary drum jig	(packed with the rotary upper drum for repair)		
J-12	FWD, RVS winding torque cassette	J-6080-824-A	GD-2086	
J-13	Mode selector	J-6080-825-A		for all models
J-14	Track shift & monitor jig	J-6080-843-A		Tape path
J-15	RF/SWP connector	J-6080-883-A		Tape path
J-16	CTL connector	J-6080-884-A		Tape path

Other equipment:
- Oscilloscope
- Analog tester(20 kΩ)

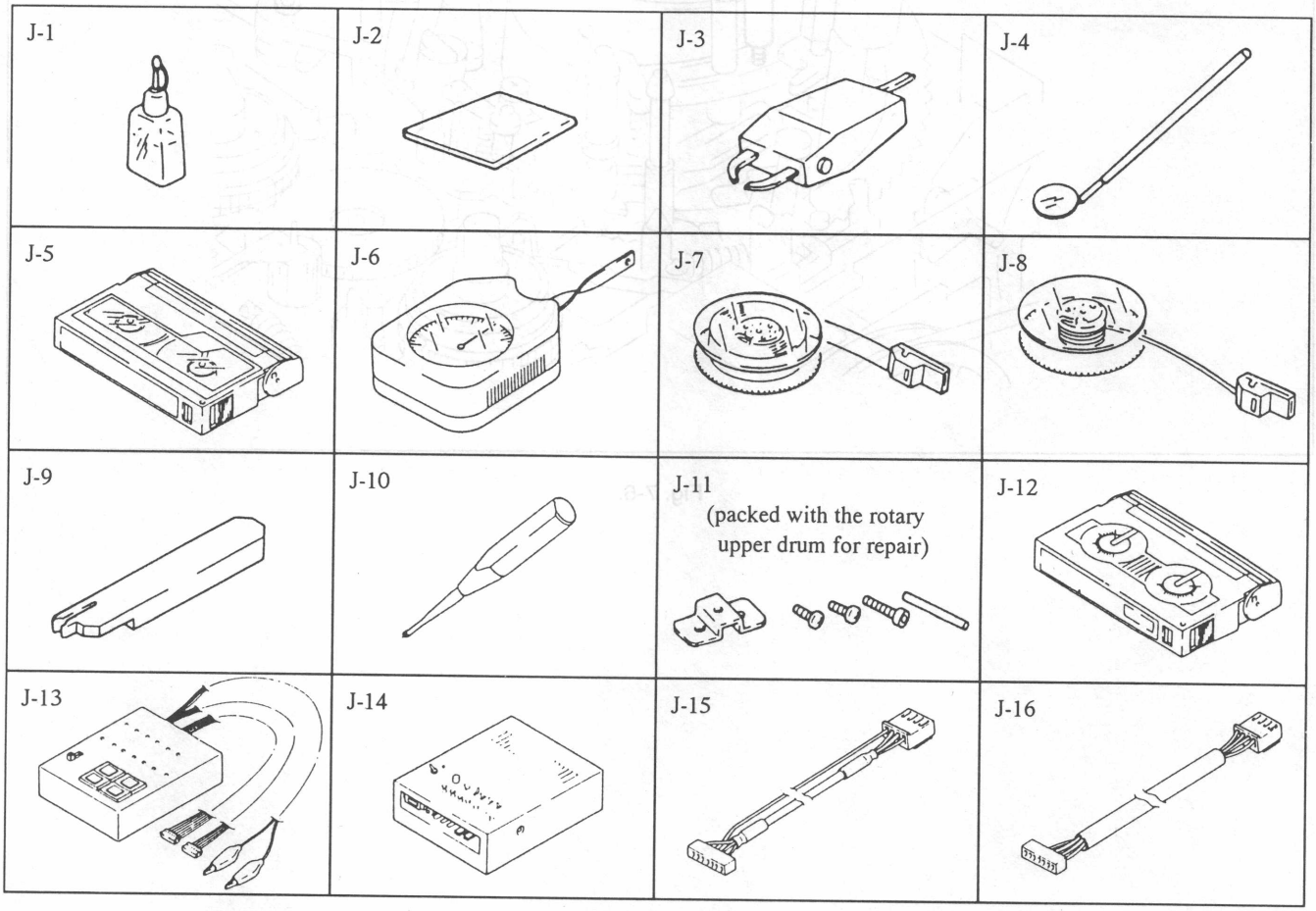

7-3. MECHANICAL CHECK, ADJUSTMENT AND REPLACEMENT

Note: • Use the mode selector (Ref. No. J-13) for this mechanical check, adjustment and replacement.
• The mode inside the [ ] is the mode set by pressing the mode selector button.

7-3-1. Fly wheel

1. Removal (See Fig. 7-6.)

1) While holding the claws ❷ of the IP roller guide ❶, remove the fly wheel ❸.

2. Mounting (See Fig. 7-6.)

1) With the large hole of the fly wheel ❸ down, push onto the IP roller guide ❶ until it clicks into place.

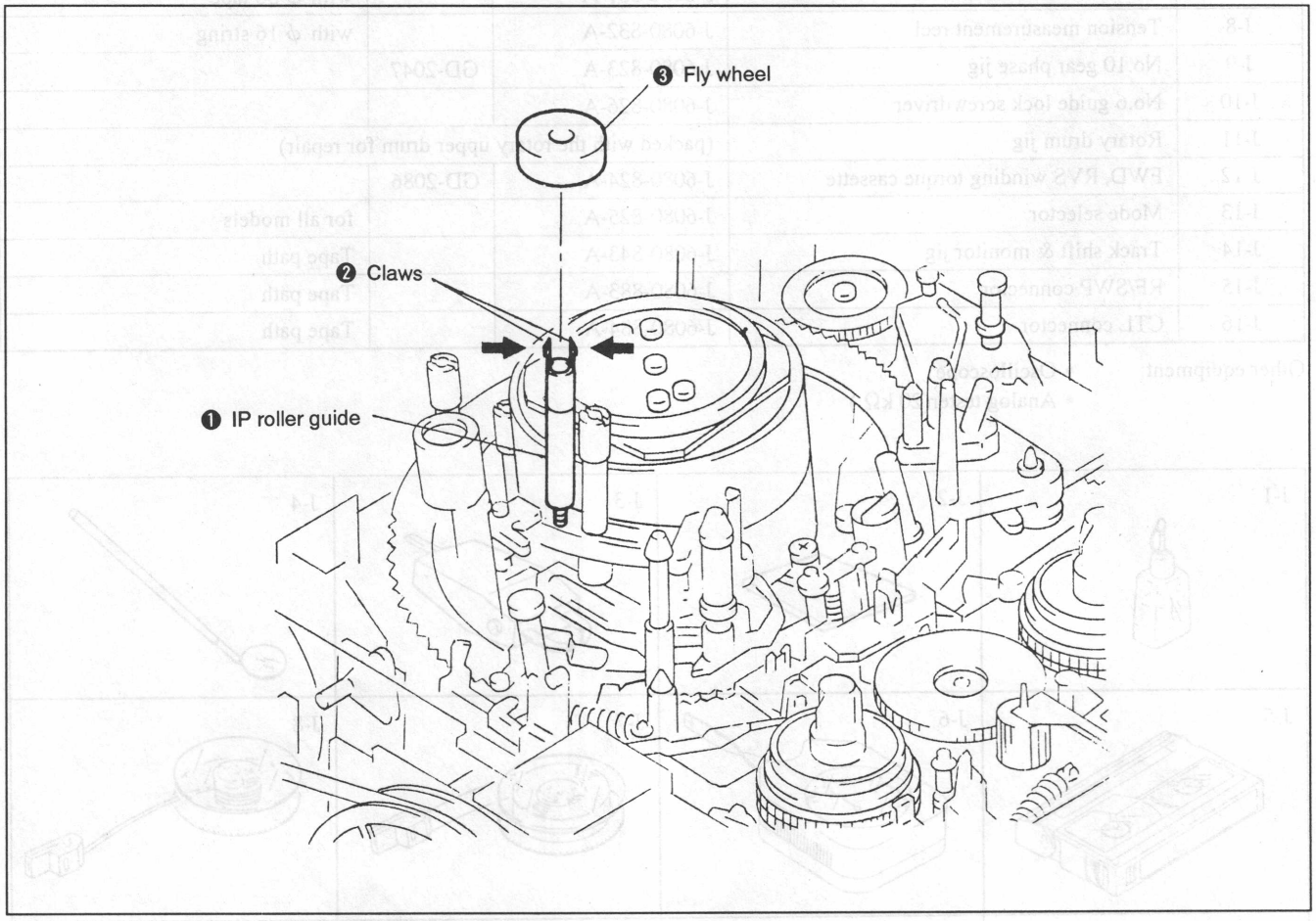

Fig. 7-6.

7-3-2. S Reel Table Assembly

1. Removal (See Fig. 7-7.)

1) Remove the LS cassette compartment assembly according to Section 2. DISASSEMBLY 2-16.
2) Set to FF/REW mode.
3) Remove screw ❶ and remove reel table stopper ❷.
4) Remove the S reel table assembly ❸.
   Note: Be sure to hold the upper reel claw section when removing. (See Fig. 7-7. (Note))

2. Mounting (See Fig. 7-7.)

1) Put a half drop of oil on the upper spherical part of shaft ❹.
2) Move the S main brake assembly ❺ in the direction of arrow.
3) Mount the S reel table assembly ❸, being careful not to hit the tension regulator band assembly ❻.
4) Mount the reel table stopper ❷ and tighten with screw ❶.
5) Set to LOADING/UNLOADING mode.
6) Mount the LS cassette compartment assembly in opposite procedure of Section 2. DISASSEMBLY 2-16.

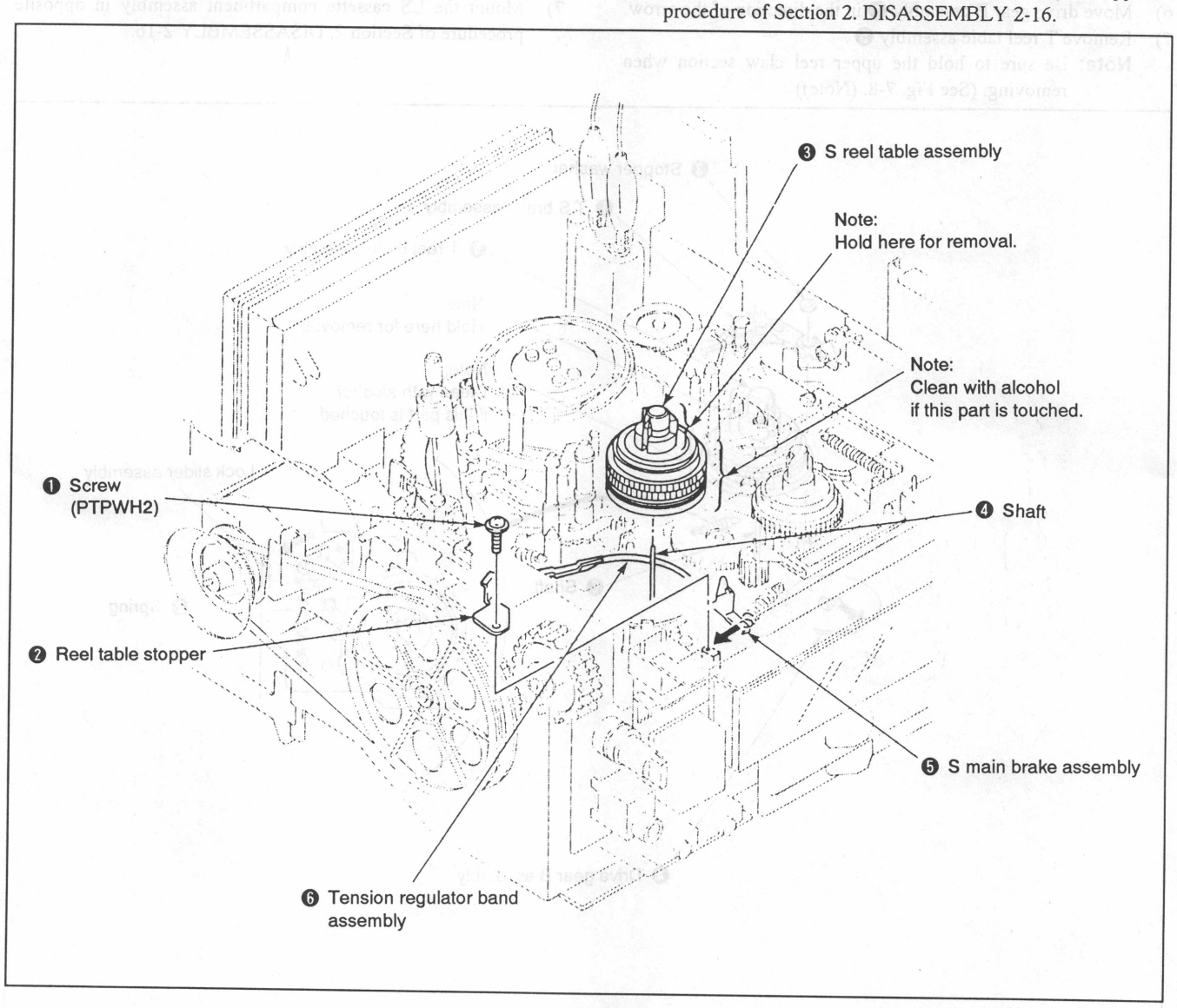

Fig. 7-7.

7-3-3. T Reel Table Assembly

1. Removal (See Fig. 7-8.)

1) Remove the LS cassette compartment assembly according to Section 2. DISASSEMBLY 2-16.
2) Set to UNLOADING WAIT mode.
3) Hook the spring ❷ on the T.S brake assembly ❶ to the claw of lock slider assembly.
4) Remove the stopper washer ❸ and remove the T.S brake assembly ❶.
5) Set to EJECT mode.
6) Move drive gear B assembly ❹ in the direction of the arrow.
7) Remove T reel table assembly ❺.

Note: Be sure to hold the upper reel claw section when removing. (See Fig. 7-8. (Note))

2. Mounting (See Fig. 7-8.)

1) Put a half drop of oil on the upper spherical part of shaft ❻.
2) Move the drive gear B assembly ❹ in the direction of the arrow. (Confirm EJECT mode.)
3) Mount the T reel table assembly ❺.
4) Mount the T.S brake assembly ❶ and fix the stopper washer ❸.
5) Hook the spring ❷ to the T.S brake assembly ❶ claw.
6) Set to LOADING TOP, LOADING/UNLOADING mode.
7) Mount the LS cassette compartment assembly in opposite procedure of Section 2. DISASSEMBLY 2-16.

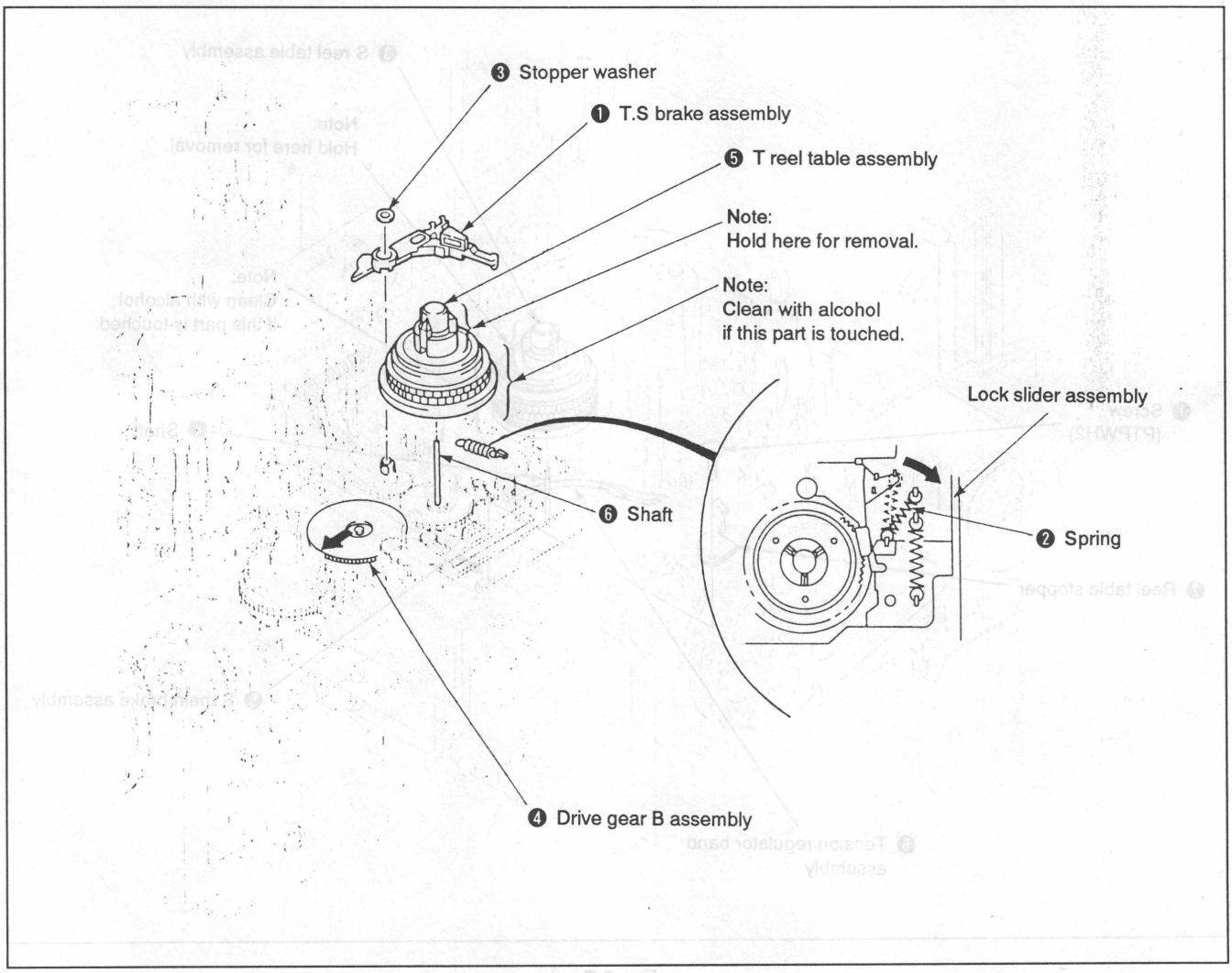

Fig. 7-8.

7-3-4. Pinch Press Arm Assembly

1. Removal (See Fig. 7-9.)

1) Remove the LS cassette compartment assembly according to Section 2. DISASSEMBLY 2-16.
2) Hook the spring ❶ to the pinch press arm assembly ❷.
3) Remove the stopper washer ❸ and remove the pinch press arm assembly ❷.

2. Mounting (See Fig. 7-9.)

1) Put a half drop of oil on the shaft ❹.
2) Mount the pinch press arm assembly ❷ and fix the stopper washer ❸.
3) Hook the spring ❶ to the tension regulator spring hook assembly ❺.
4) Mount the LS cassette compartment assembly in opposite procedure of Section 2. DISASSEMBLY 2-16.

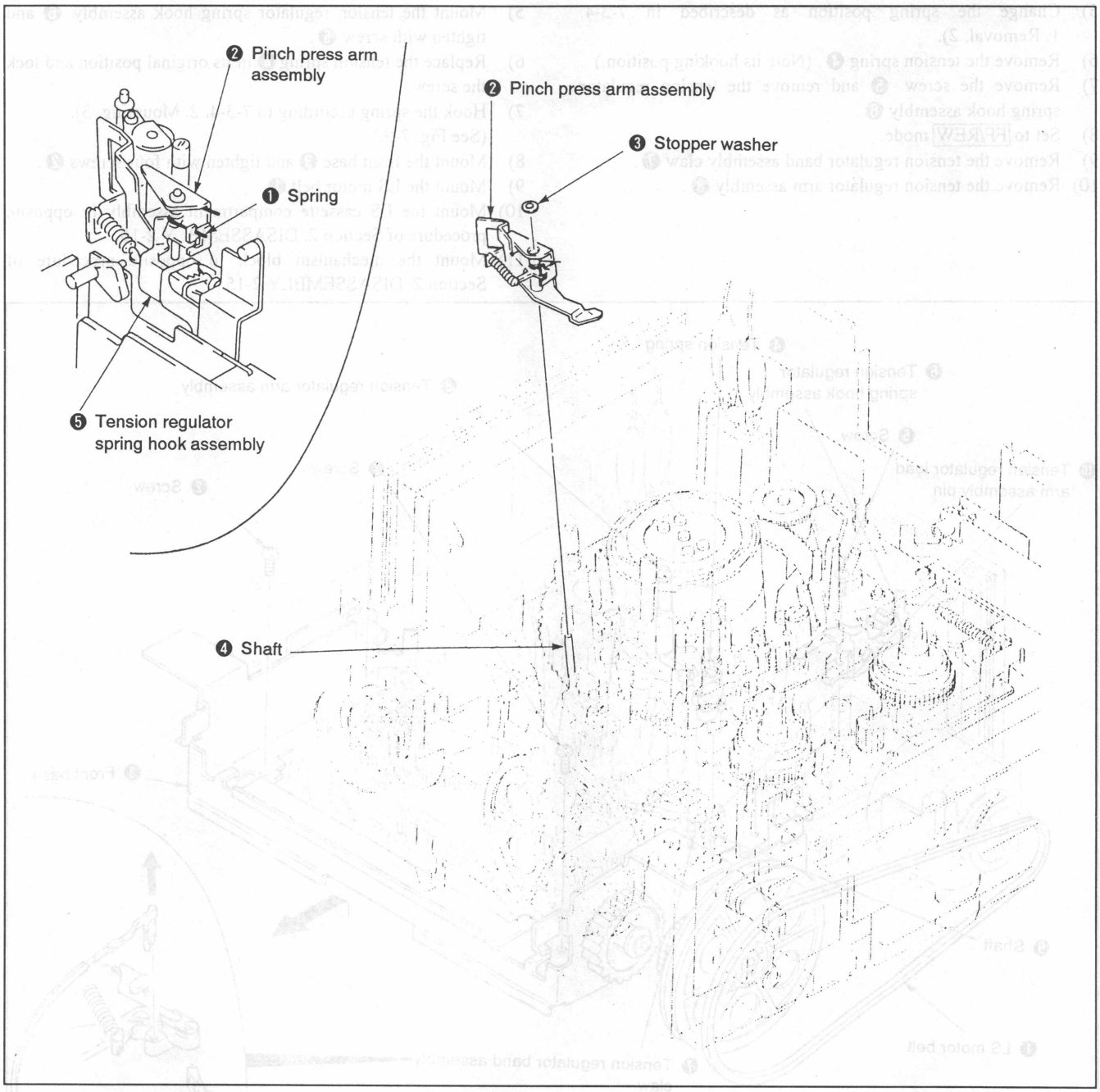

Fig. 7-9.

7-3-5. Tension Regulator Arm Assembly

1. Removal (See Fig. 7-10.)

1) Remove the mechanism block according to Section 2. DISASSEMBLY 2-15.
2) Remove the LS cassette compartment assembly according to Section 2. DISASSEMBLY 2-16.
3) Remove the LS motor belt ❶
4) Remove the four screws ❷ and move the front base ❸ in the direction of arrow.
5) Change the spring position as described in 7-3-4. 1. Removal, 2).
6) Remove the tension spring ❹. (Note its hooking position.)
7) Remove the screw ❺ and remove the tension regulator spring hook assembly ❻.
8) Set to FF/REW mode.
9) Remove the tension regulator band assembly claw ❼.
10) Remove the tension regulator arm assembly ❽.

2. Mounting (See Fig. 7-10.)

1) Put a half drop of oil on the shaft ❾.
2) Mount the tension regulator arm assembly ❽, inserting the tension regulator load arm assembly pin ❿ in the tension regulator arm assembly ❽ cam groove (on the back).
3) Mount the tension regulator band assembly claw ❼. (Do not touch the band or change its shape.)
4) Set to LOADING/UNLOADING mode.
5) Mount the tension regulator spring hook assembly ❻ and tighten with screw ❺.
6) Replace the tension spring ❹ in its original position and lock the screw.
7) Hook the spring according to 7-3-4. 2. Mounting, 3). (See Fig. 7-9.)
8) Mount the front base ❸ and tighten with four screws ❷.
9) Mount the LS motor belt ❶.
10) Mount the LS cassette compartment assembly in opposite procedure of Section 2. DISASSEMBLY 2-16.
11) Mount the mechanism block in opposite procedure of Section 2. DISASSEMBLY 2-15.

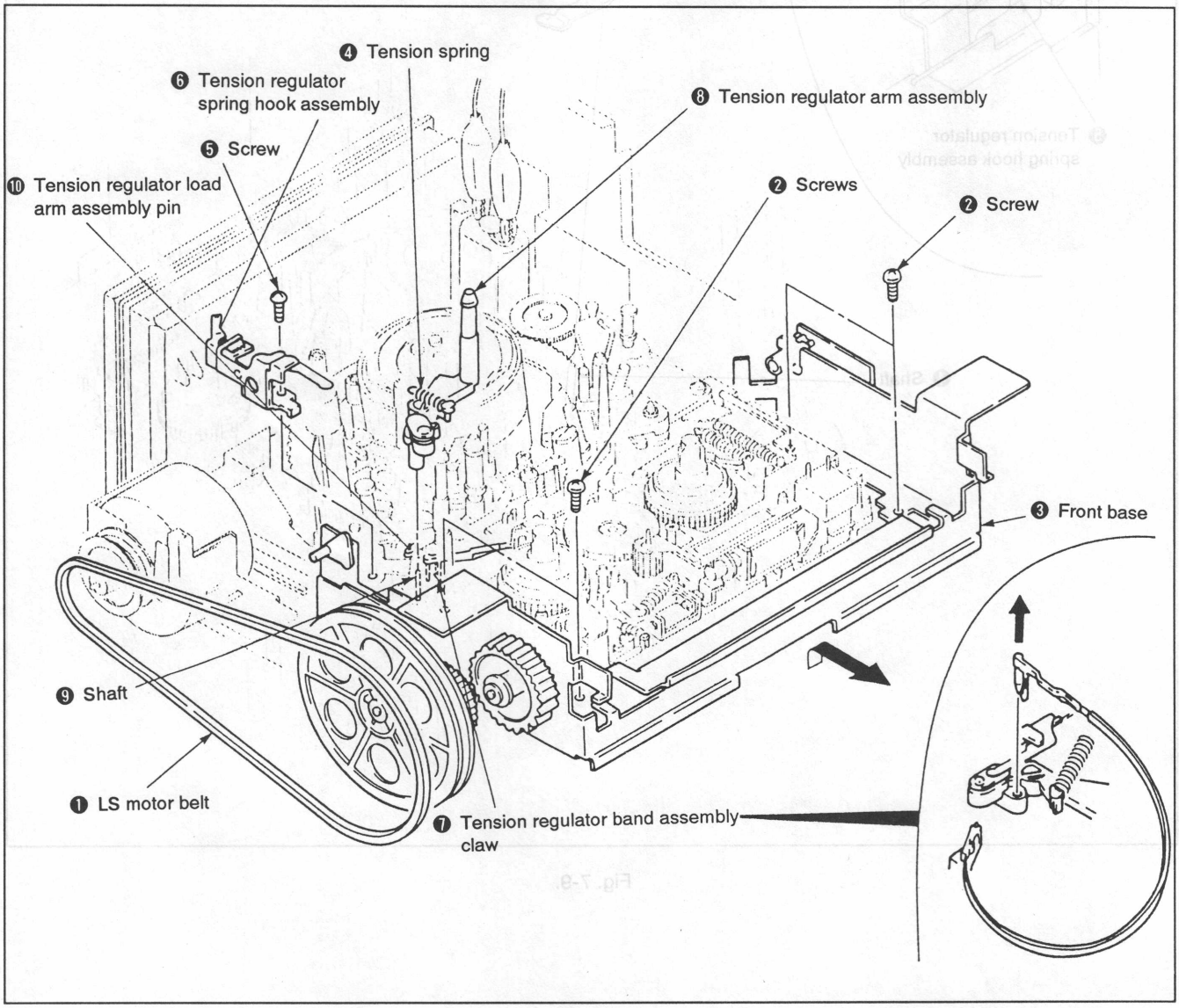

Fig. 7-10.

7-3-6. Tension Regulator Band Assembly

1. Removal (See Fig. 7-11.)

1) Remove the S reel table assembly according to 7-3-2. 1. Removal. (See Fig. 7-7.)
2) Remove the band arm claw ❶.
3) Remove the claw ❷ and remove the tension regulator band assembly ❸.

2. Mounting (See Fig. 7-11.)

1) Mount the tension regulator band assembly ❸. (Do not touch the band or change its shape.)
2) Fit the band arm claw ❶.
3) Mount the S reel table assembly according to 7-3-2. 2. Mounting. (See Fig. 7-7.)
4) Perform 7-3-22. FWD Back Tension Adjustment.

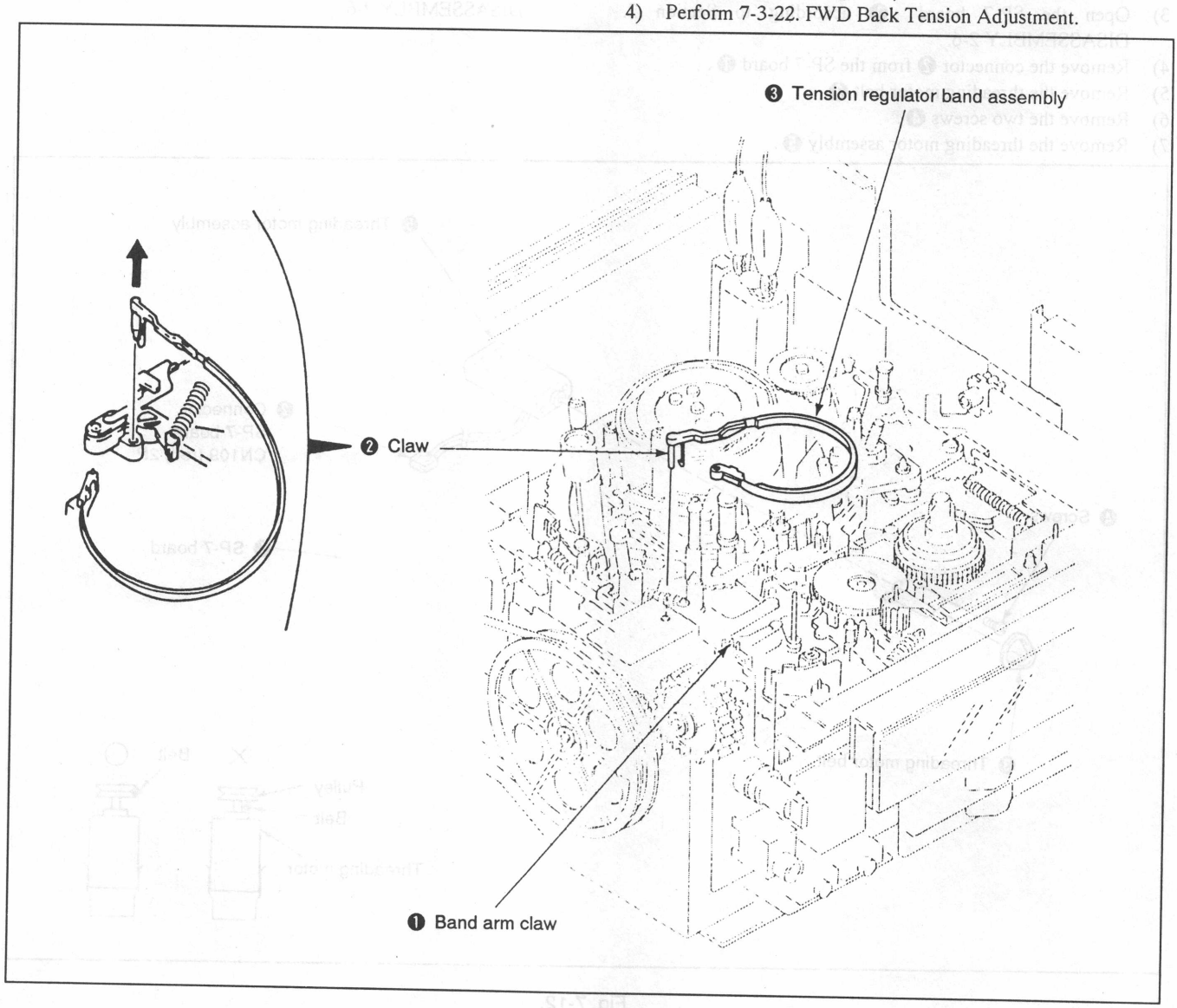

Fig. 7-11.

7-3-7. Threading Motor Assembly

1. Removal (See Fig. 7-12.)

1) Turn on the power supply and press the power button.
2) Press the EJECT button.
   (Be sure to turn off the power after setting to the EJECT mode. If the power does not come on, eject the tape manually according to Section 2. DISASSEMBLY 2-17.)
3) Open the SP-7 board ❶ according to Section 2. DISASSEMBLY 2-6.
4) Remove the connector ❷ from the SP-7 board ❶.
5) Remove the threading motor belt ❸.
6) Remove the two screws ❹.
7) Remove the threading motor assembly ❺.

2. Mounting (See Fig. 7-12.)

1) Mount the threading motor assembly ❺ and tighten with the two screws ❹.
2) Mount the threading motor belt ❸.
3) Connect the connector ❷ to the SP-7 board ❶.
4) Mount the SP-7 board in opposite procedure of Section 2. DISASSEMBLY 2-6.

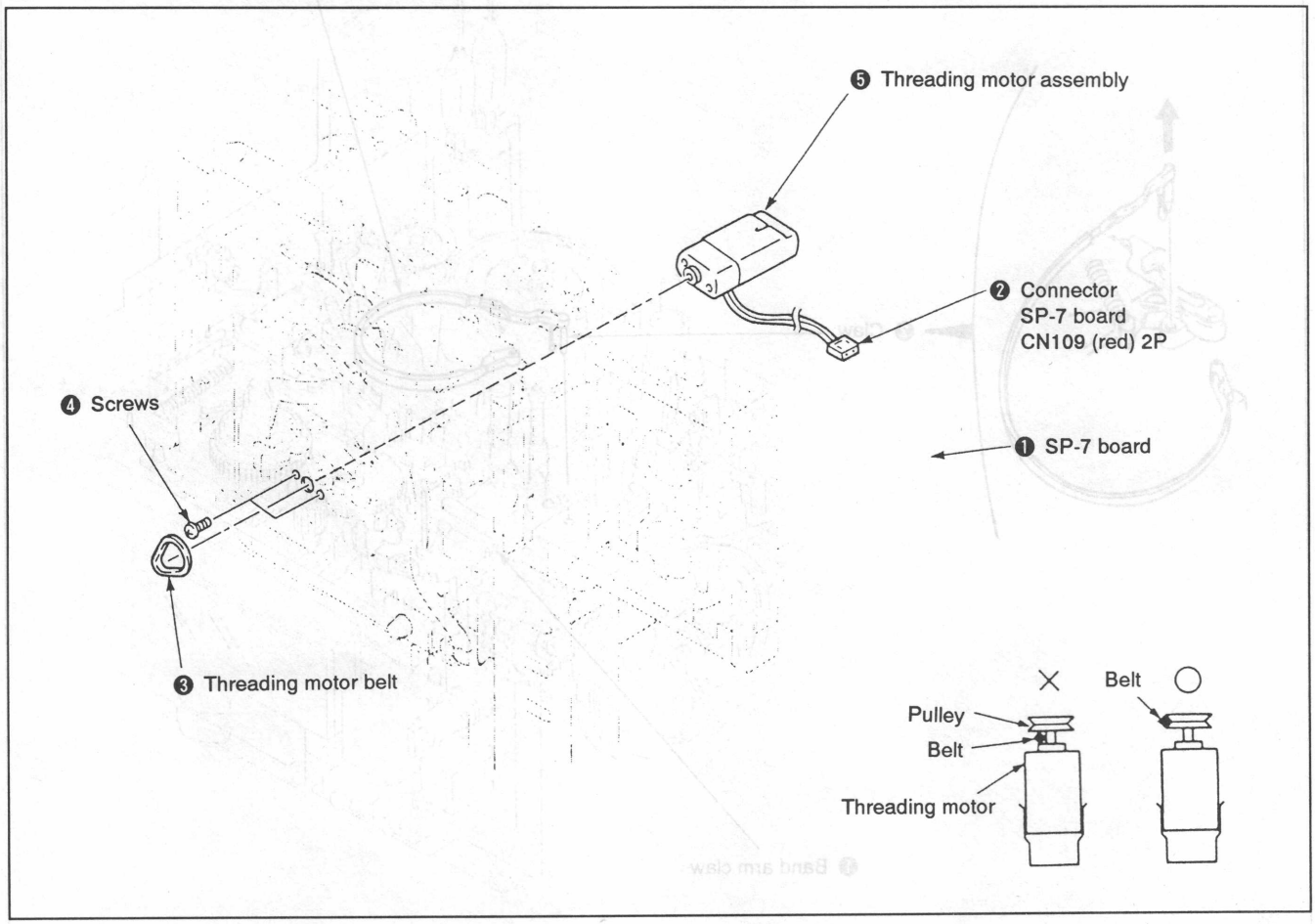

Fig. 7-12.

7-3-8. Threading Ring Assembly

1. Removal (See Fig. 7-13.)

1) Remove the LS cassette compartment assembly according to Section 2. DISASSEMBLY 2-16.
2) Remove the mechanism block according to Section 2. DISASSEMBLY 2-15.
3) Operate the mode selector, and move the guide base assembly ❶ until just before it locks, and the No. 2 guide assembly ❷ until just before it locks where the ring stopper ❸ screw is visible.
(Do not move threading ring assembly ⓫.)
4) Remove the stopper washer ❹ and remove No. 10 gear ❺.
5) Remove the screw ❻, and remove the roller stop plate ❼ and ring roller ❽.
6) Remove the two screws ❾, and remove the ring stopper ❸ and ring roller ❿.
7) Remove the threading ring assembly ⓫ in the direction of arrow.

Note: When removing the threading ring assembly ⓫, be sure not to come into contact with the drum.

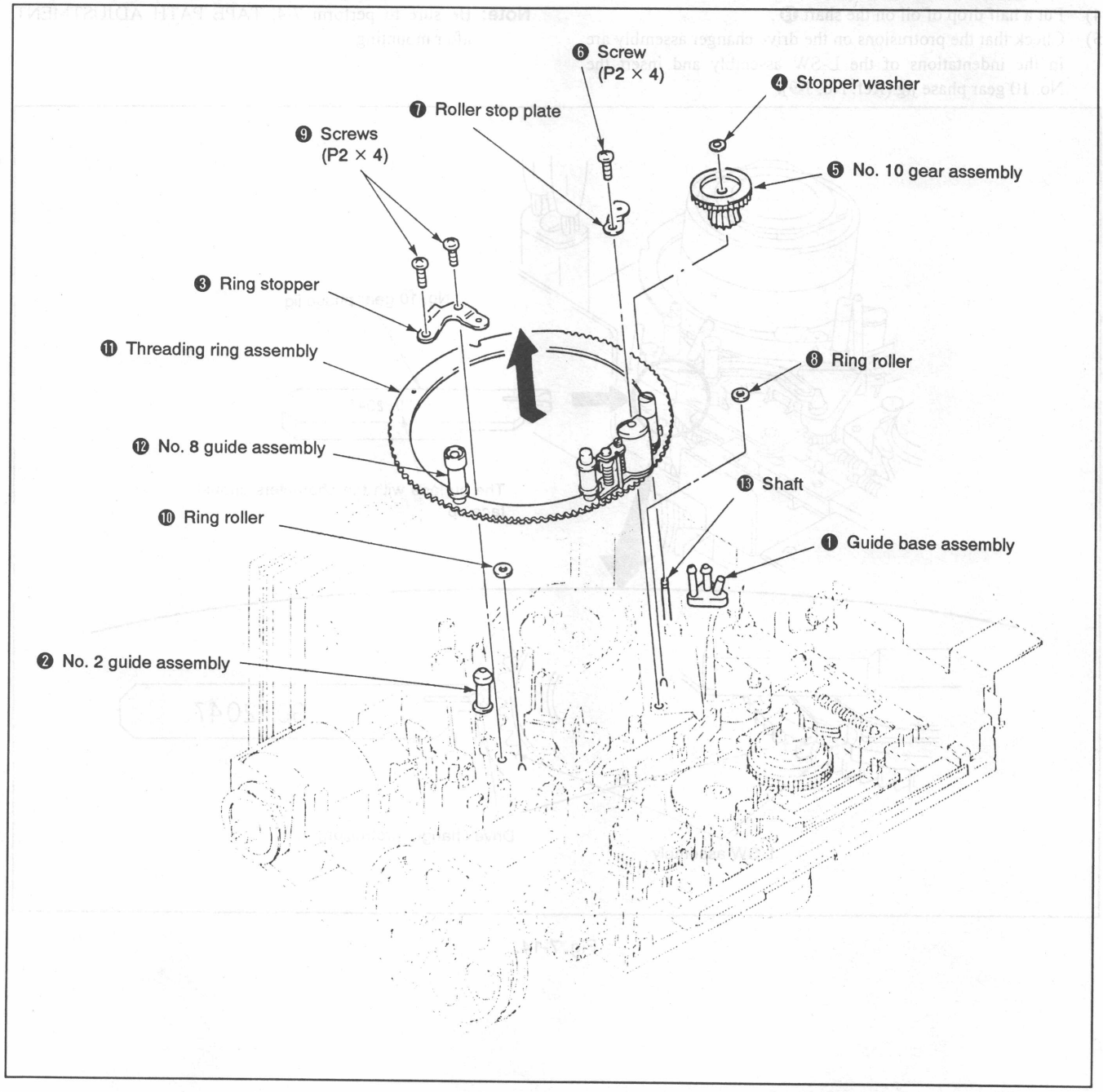

Fig. 7-13.

2. Mounting (See Fig. 7-14.)

1) Mount the threading ring assembly ⓫ so that it becomes in the unthreaded state (pinch roller arm assembly is on the front panel side.) (Confirm that it is in the state in Removal, 3).)
2) Mount the ring roller ⓾ and ring stopper ❸ and tighten with the two screws ❾ . (No. 8 guide assembly ⓬ should be closer to the front panel than the ring stopper ❸ .)
3) Mount the ring roller ❽ and roller stop plate ❼ and tighten with screw ❻ . (Confirm that the threading ring assembly matches the three ring rollers.)
4) Put a half drop of oil on the shaft ⓭ .
5) Check that the protrusions on the drive changer assembly are in the indentations of the L-SW assembly and insert the No. 10 gear phase jig (Ref. No. J-9).
6) Mount No. 10 gear assembly ❺ and fix stopper washer ❹ while pushing the No. 8 guide assembly ⓬ against the ring stopper ❸ .
7) Pull out the No. 10 gear phase jig.
8) Set to LOADING TOP mode.
9) Mount the LS cassette compartment assembly in opposite procedure of Section 2. DISASSEMBLY 2-16.
10) Mount the mechanism block in opposite procedure of Section 2. DISASSEMBLY 2-15.

Note: Be sure to perform 7-4. TAPE PATH ADJUSTMENT after mounting.

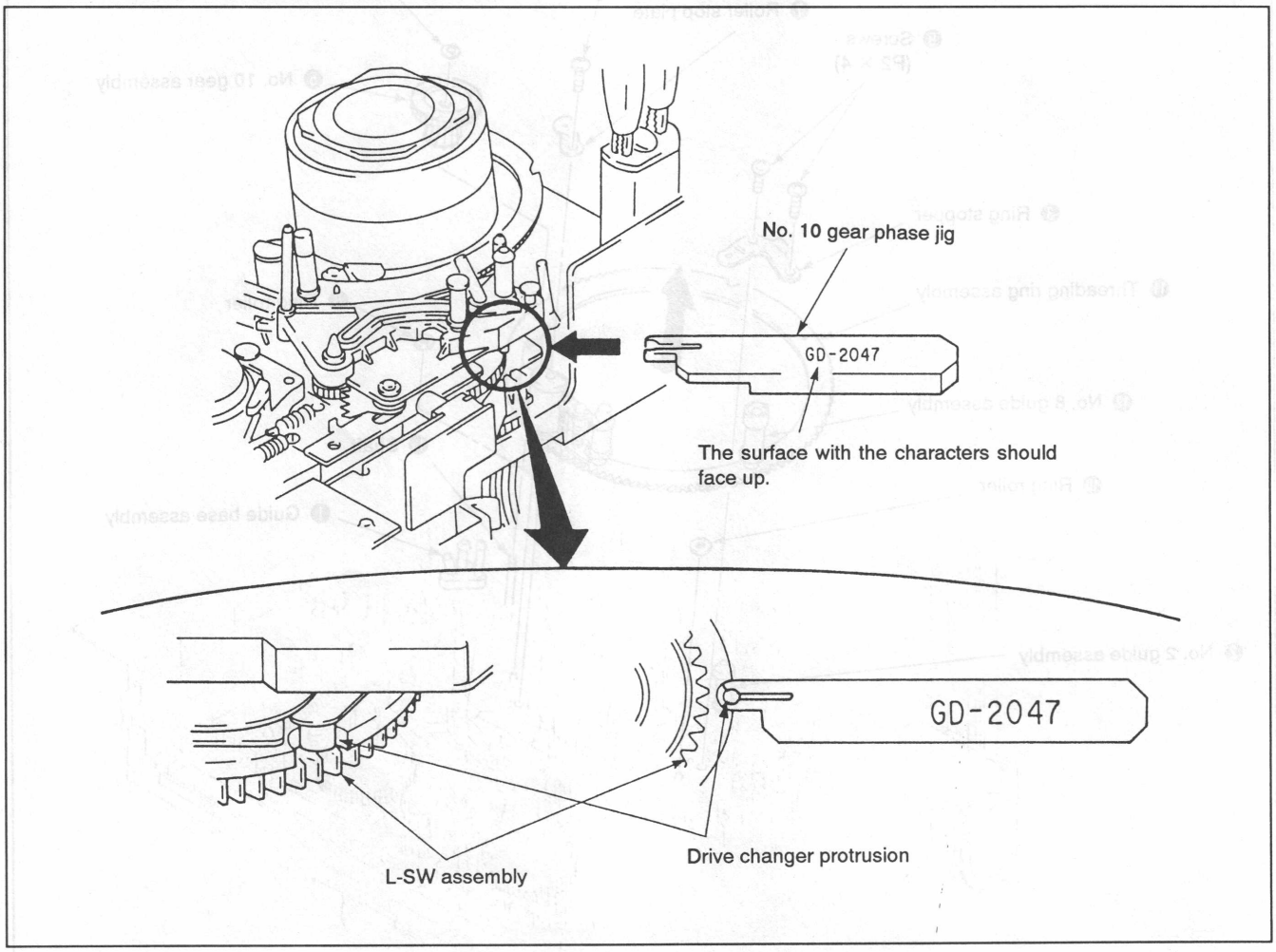

Fig. 7-14.

7-3-9. Pinch Roller Arm Assembly

1. Removal (See Figs. 7-15. through 7-19.)

1) Remove the threading ring assembly according to 7-3-8. 1. Removal. (See Fig. 7-13.)
2) Remove the stopper washer ❶. (See Fig. 7-15.)
3) Change the position of the torsion spring ❸ on No. 7 guide assembly ❷. (See Fig. 7-16.)
4) Turn the pinch roller arm assembly ❹ in the direction of arrow. (See Fig. 7-17.)
5) Remove the pinch roller arm assembly ❹ in the direction of arrow. (See Fig. 7-18.)
6) Remove the torsion spring ❸. (See Fig. 7-19.)

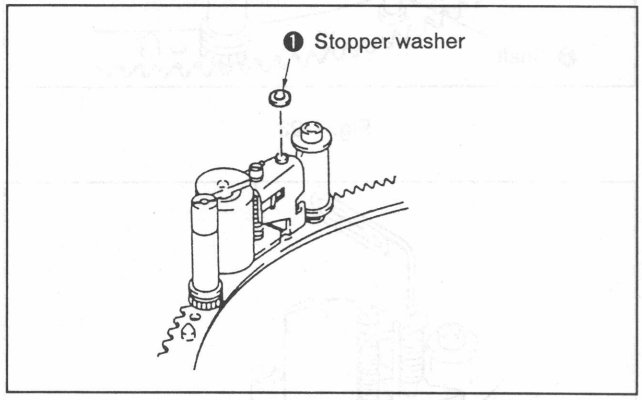

Fig. 7-15.

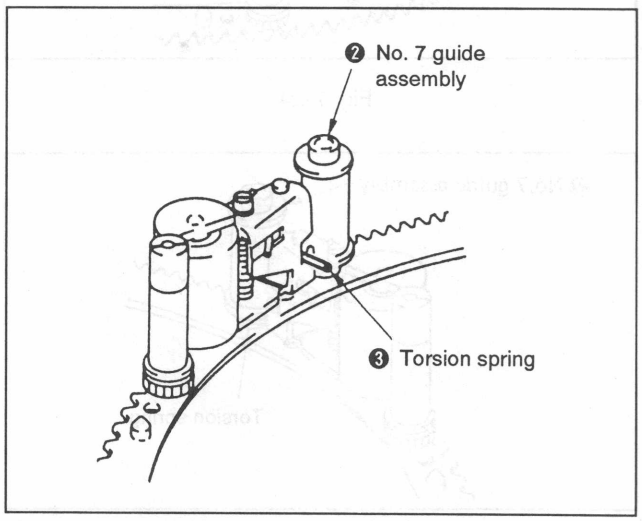

Fig. 7-16.

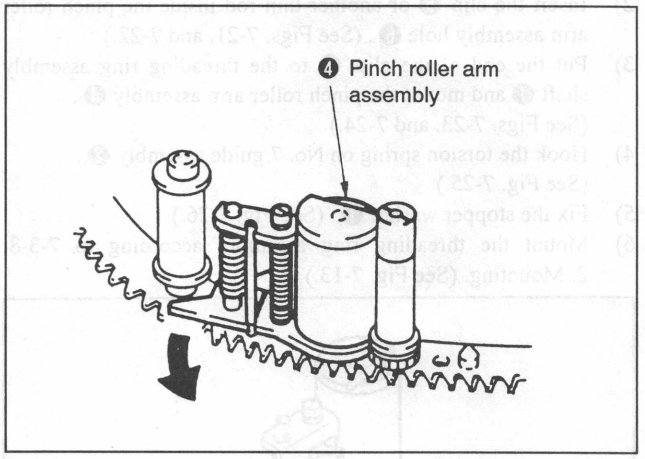

Fig. 7-17.

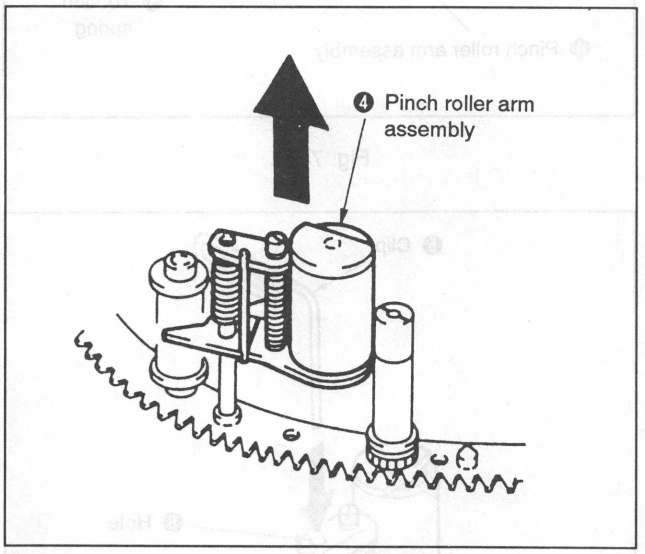

Fig. 7-18.

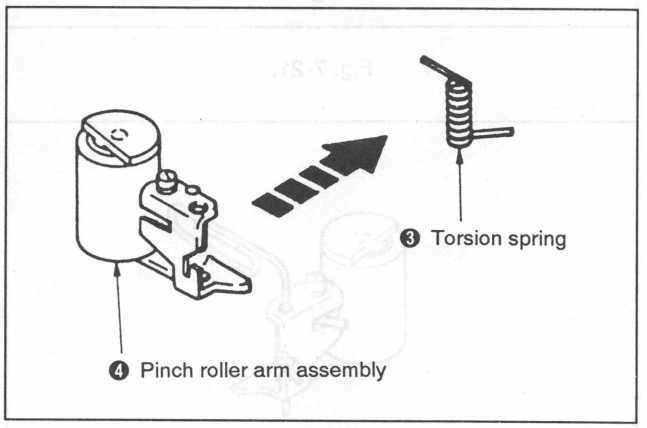

Fig. 7-19.

2. Mounting (See Figs. 7-20. through 7-26.)

1) Hook the torsion spring ❸. (See Fig. 7-20.)
2) Insert the clip ❺ or another thin rod inside the pinch roller arm assembly hole ❻. (See Figs. 7-21. and 7-22.)
3) Put the end of the clip ❺ to the threading ring assembly shaft ❼ and mount the pinch roller arm assembly ❹. (See Figs. 7-23. and 7-24.)
4) Hook the torsion spring on No. 7 guide assembly ❷. (See Fig. 7-25.)
5) Fix the stopper washer ❶. (See Fig. 7-26.)
6) Mount the threading ring assembly according to 7-3-8. 2. Mounting. (See Fig. 7-13.)

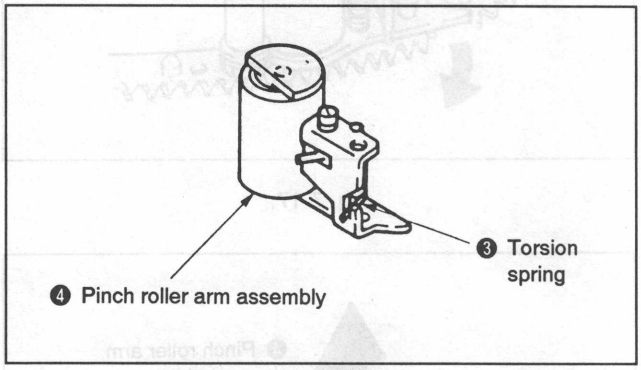

Fig. 7-20.

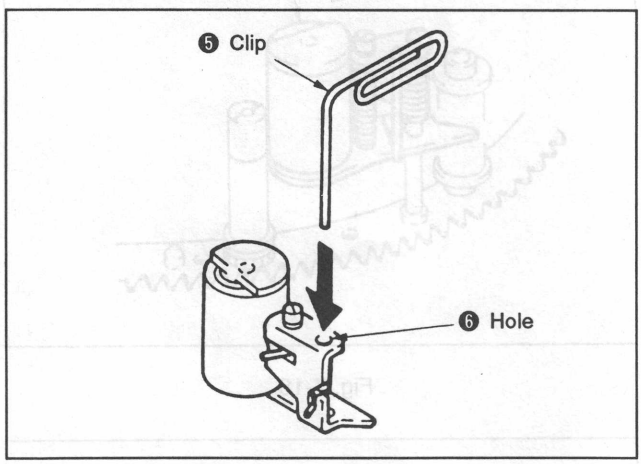

Fig. 7-21.

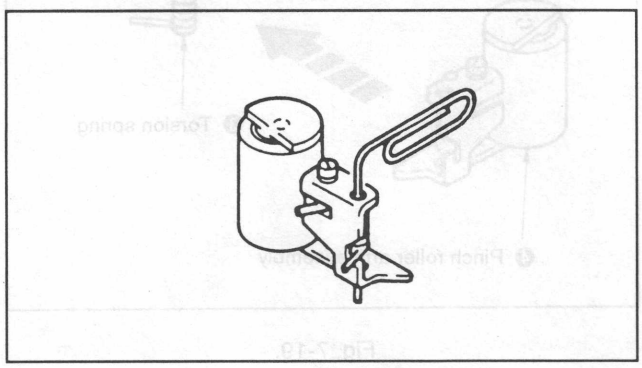

Fig. 7-22.

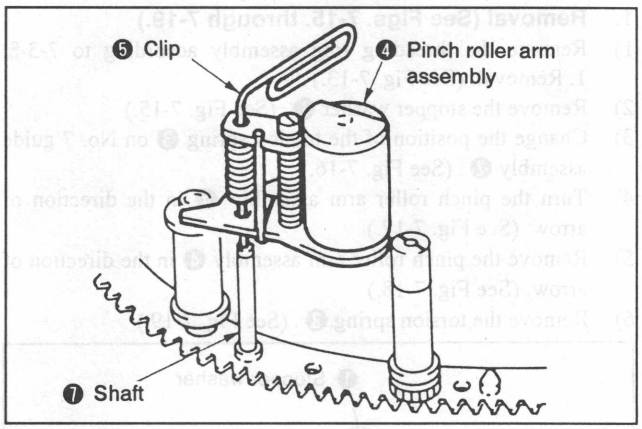

Fig. 7-23.

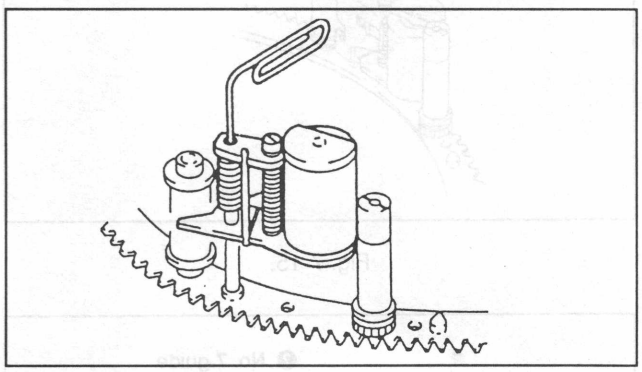

Fig. 7-24.

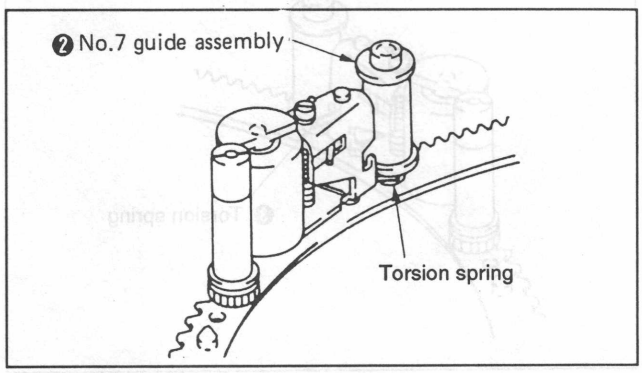

Fig. 7-25.

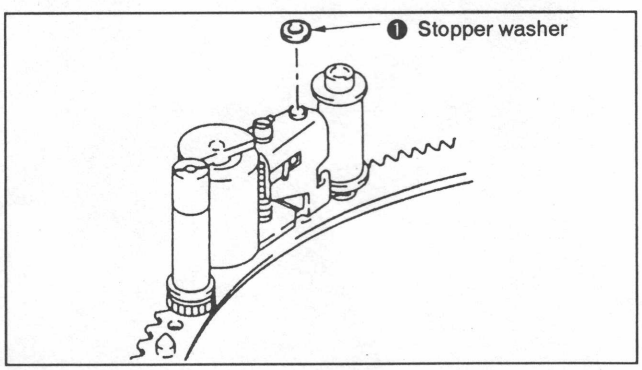

Fig. 7-26.

7-3-10. Slant Guide Chassis Assembly

1. Removal (See Fig. 7-27.)

1) Remove the threading ring assembly according to 7-3-8. 1. Removal. (See Fig. 7-13.)
2) Remove screw ❶ and E ring ❷.
3) Remove the slant guide chassis assembly ❸.

2. Mounting (See Figs. 7-27. through 7-29.)

1) Operate the mode selector, and line up the right edge of the L slider assembly and the right edge of the lock slider assembly. (See Fig. 7-28.)
2) Set the slant guide chassis assembly ❸ guide base assembly in unthreaded state (guide base assembly is on front panel side) and mount. (See Fig. 7-29.)
   Note: At this time, check the engagement position of the slant guide driving gear and L slider section assembly gear. (See Fig. 7-33.)
3) Insert the E ring ❷ and tighten with screw ❶.
4) Put in the state in 7-3-8. 1. Removal, 3).
5) Mount the threading ring assembly according to 7-3-8. 2. Mounting. (See Figs. 7-13. and 7-14.)

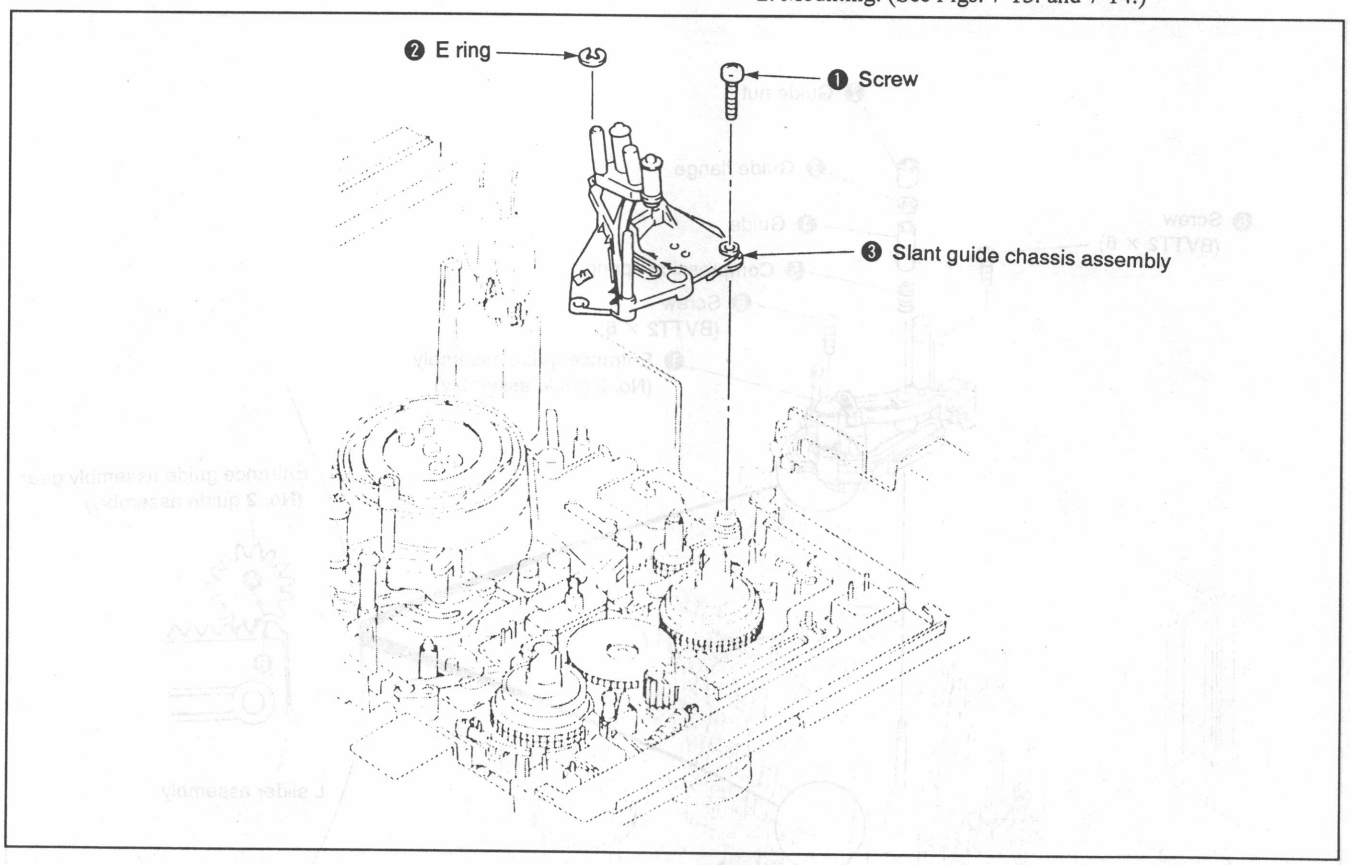

Fig. 7-27.

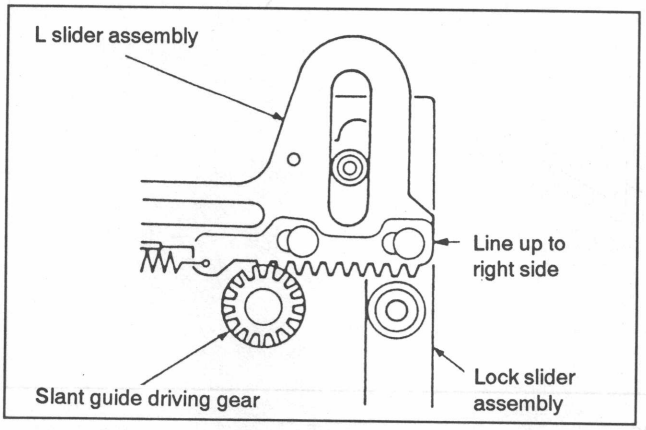

Fig. 7-28.

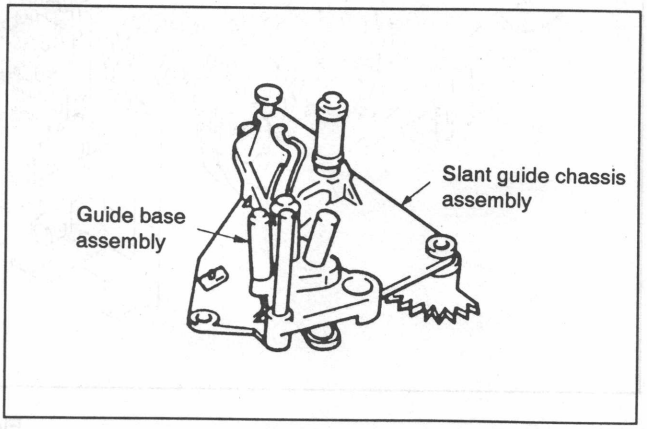

Fig. 7-29.

7-3-11. Entrance Guide Assembly (No. 2 Guide Assembly)

1. Removal (See Fig. 7-30.)

1) Remove the LS cassette compartment assembly according to Section 2. DISASSEMBLY 2-16.
2) Turn the rotary upper drum counterclockwise, so that the head section dose not touch the entrance guide assembly ❶.
3) Remove the fly wheel according to 7-3-1. 1. Removal. (See Fig. 7-6.)
4) Remove No. 3 guide nut ❷, and remove guide flange ❸, guide ❹ and compression spring ❺.
5) Remove the two screws ❻.
6) Remove the entrance guide assembly ❶.

2. Mounting (See Fig. 7-30.)

1) Engage the lower side of the entrance guide assembly and L slider assembly with their flat portions Ⓐ and Ⓑ as shown.
2) Tighten the two screws ❻.
3) Mount the compression spring ❺, guide ❹ and guide flange ❸ in that order and then temporarily tighten the guide nu❷.
4) Mount the fly wheel according to 7-3-1. 2. Mounting. (See Fig. 7-6.)
5) Mount the LS cassette compartment assembly in opposite procedure of Section 2. DISASSEMBLY 2-16.

Note: Be sure to perform 7-4. TAPE PATH ADJUSTMENT after mounting.

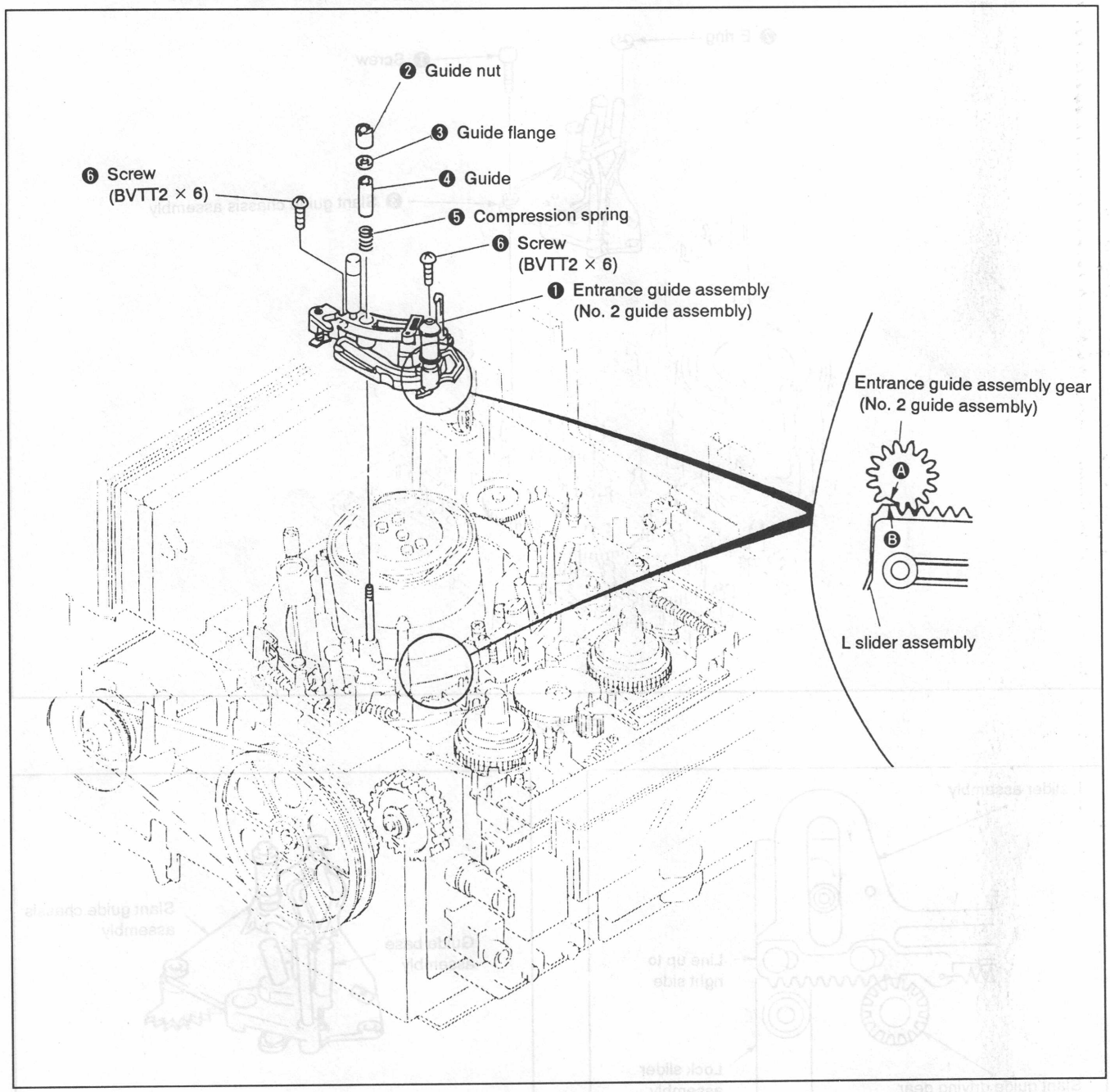

Fig. 7-30.

7-3-12. L Slider Assembly

1. Removal (See Fig. 7-31.)

1) Remove the slant guide chassis assembly according to 7-3-10. 1. Removal.
2) Remove the entrance guide assembly according to 7-3-11. 1. Removal.
3) Set to DRUM START mode.
4) Remove the slant guide driving gear ❶.
5) Remove the tension regulator load arm assembly ❷ pin from the cam groove of the tension regulator arm assembly. (See 7-3-5. Tension regulator arm assembly.)
6) Remove the two stopper washers ❸.
7) Remove the L slider assembly ❺ while pushing the RL arm assembly knob ❹ in the direction of arrow.
8) Remove the stopper washer ❻ and remove the tension regulator load arm assembly ❷.

2. Mounting (See Figs. 7-31. through 7-33.)

1) Grease. (See Fig. 7-32.)
2) Mount the tension regulator load arm assembly ❷ and fix the stopper washer ❻.
3) Mount the L slider assembly ❺ while pushing the RL arm assembly knob ❹ in the direction of arrow.
4) Insert the pin of the tension regulator load arm assembly ❷ into the groove of the M slider. (See 7-3-16. M Slider)
5) Mount the two stop washers ❸.
6) Refer to 2) of 7-3-5. 2. Mounting and insert the pin of the tension regulator load arm assembly ❷ into the cam groove of the tension regulator arm assembly. (See Fig. 7-10.)
7) Operate the mode selector and line up the right sides of the L slider assembly and lock slider assembly. (See 1) of 7-3-10. 2. Mounting.)
8) Shift the notch section of the slant guide driving gear one tooth from the leftmost tooth of the L slider assembly, and engage. (See Fig. 7-33.)
9) Mount the entrance guide assembly according to 7-3-11. 2. Mounting.
10) Mount the slant guide assembly according to 7-3-10. 2. Mounting.

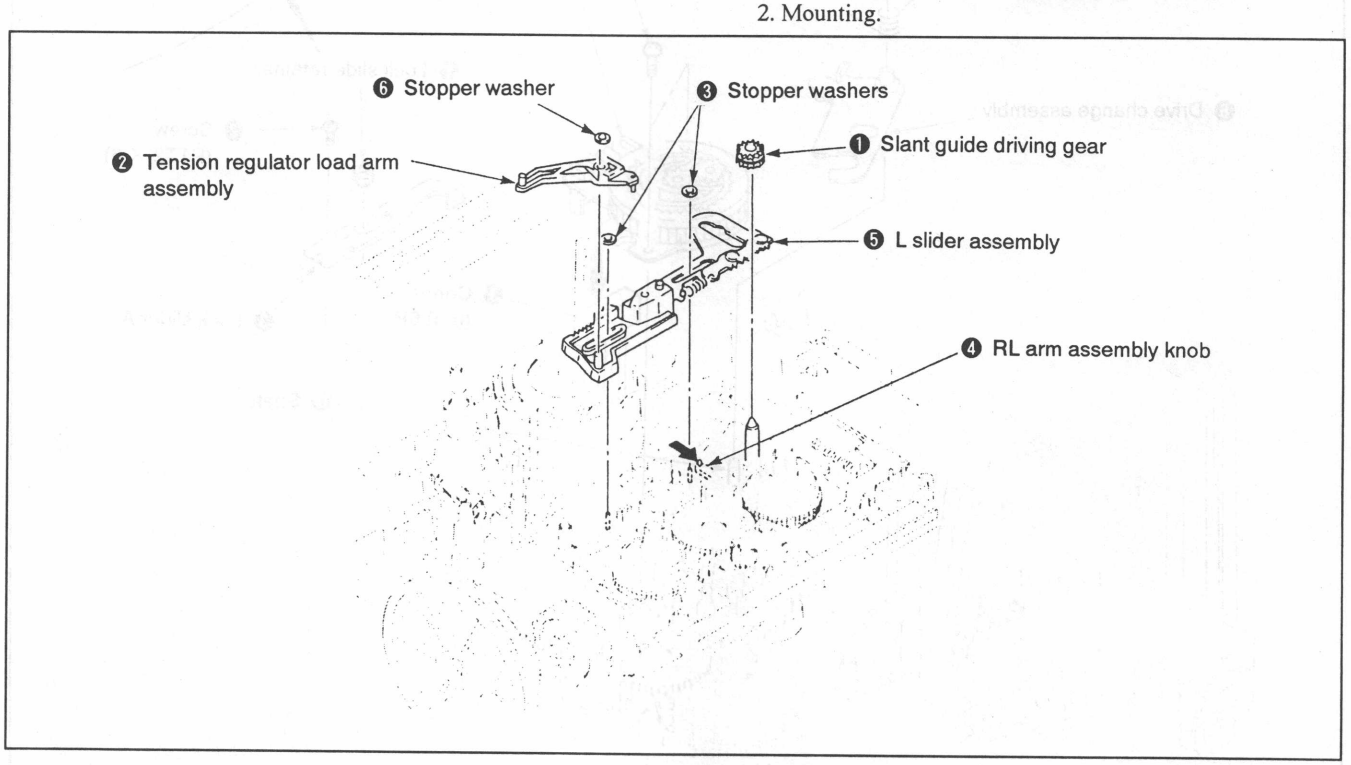

Fig. 7-31.

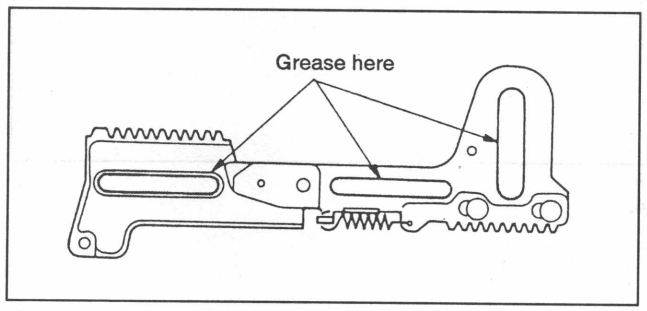

Fig. 7-32.

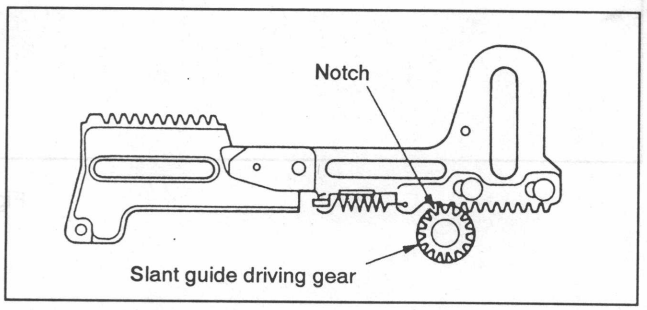

Fig. 7-33.

7-3-13. L-SW Assembly

1. Removal (See Fig. 7-34.)

1) Remove the L slider assembly according to 7-3-12. 1. Removal.
2) Remove the lock slider retainer ❶.
3) Remove the screw ❷ and lock slider A ❸.
4) Remove the stopper washer ❹ and remove torsion spring ❺.
5) Remove the drive change assembly ❻.
6) Remove the connector ❼.
7) Remove the two screws ❽ and remove the L-SW assembly ❾.

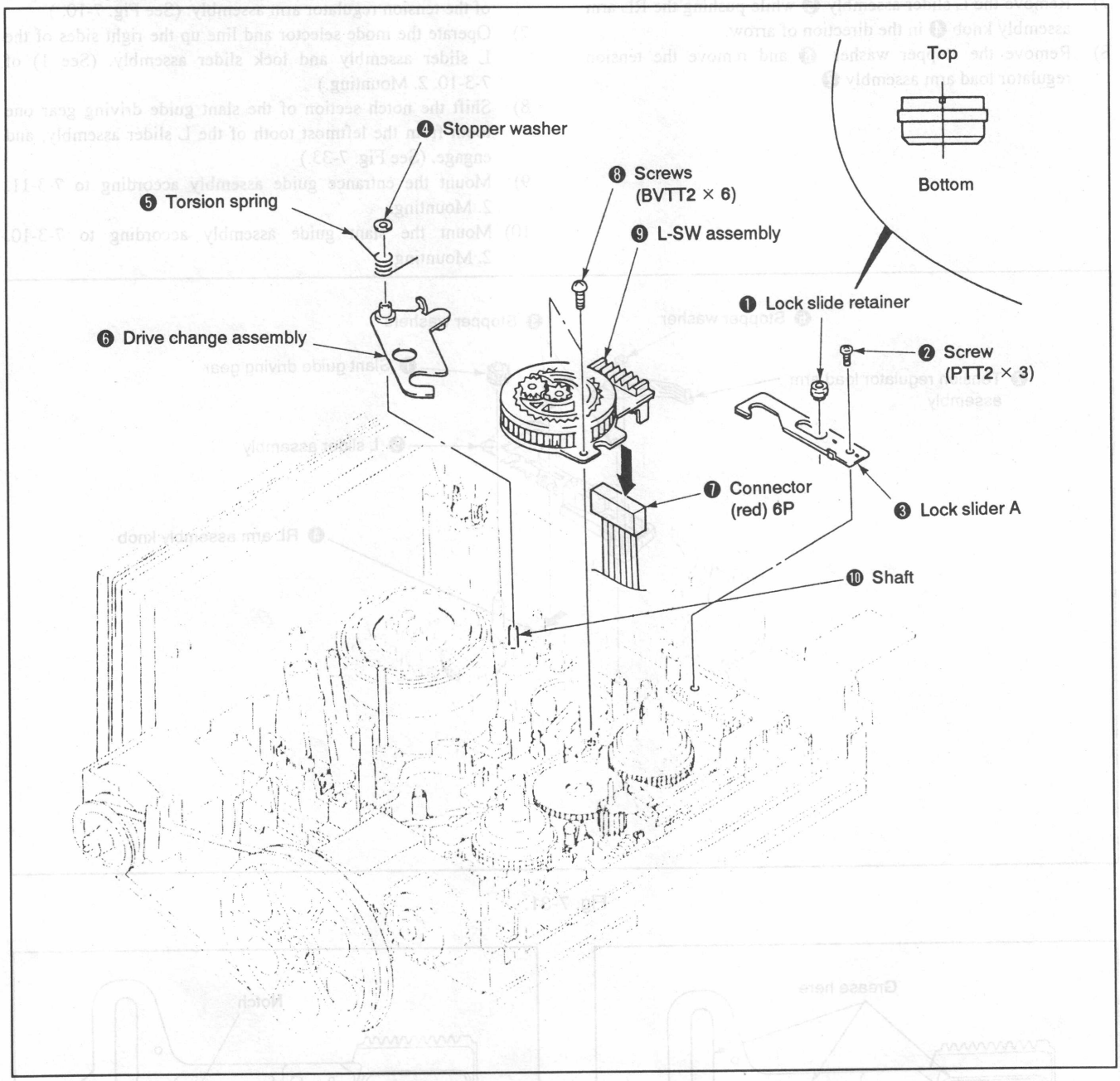

Fig. 7-34.

2. Mounting (See Figs. 7-34. through 7-36.)

1) Put a half drop of oil on the L-SW assembly ❾ shaft (planetary roller shaft).
2) Mount the L-SW assembly ❾ and tighten with the two screws ❽.
3) Connect the connector ❼.
4) Operate the mode selector and confirm that the L-SW assembly ❾ rotates.
5) Put a half drop of oil on the shaft ❿.
6) Grease the drive change assembly ❻. (See Fig. 7-35.)
7) Mount the drive change assembly ❻.
8) Hook the torsion spring ❺ and fix the stopper washer ❹.
9) Operate the mode selector and confirm that the L-SW assembly ❾ rotates.
10) Mount the lock slider A ❸ and tighten with the screw ❷.
11) Mount the lock slider retainer ❶.
12) Operate the mode selector and set to the position in Fig. 7-36.
13) Mount the L slider assembly according to 7-3-12. 2. Mounting.

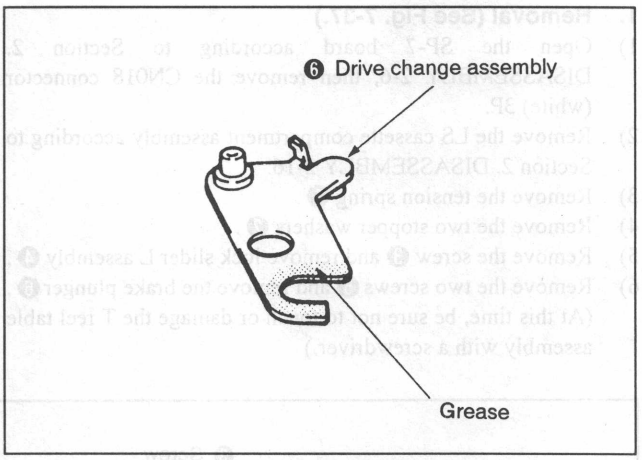

Fig. 7-35.

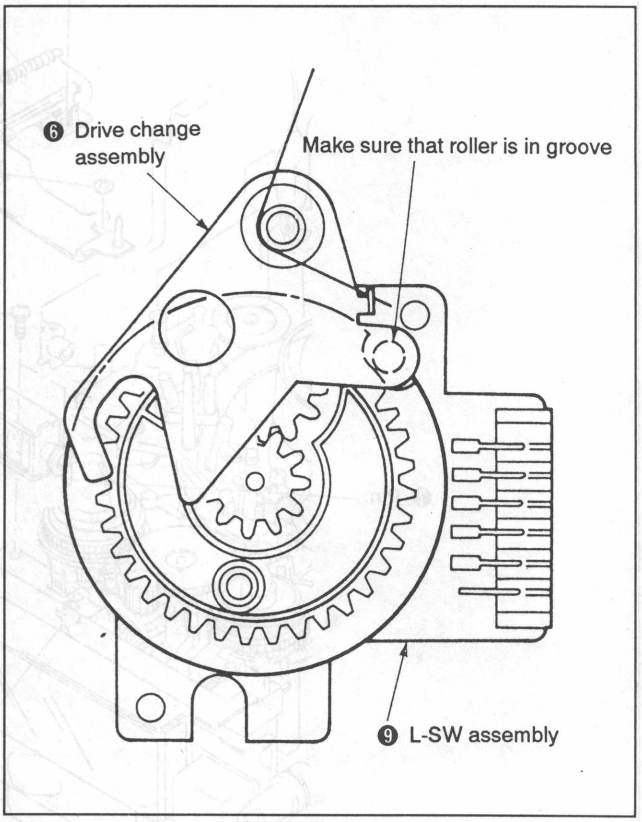

Fig. 7-36.

7-3-14. Brake Plunger

1. Removal (See Fig. 7-37.)

1) Open the SP-7 board according to Section 2. DISASSEMBLY 2-6, then remove the CN018 connector (white) 3P.
2) Remove the LS cassette compartment assembly according to Section 2. DISASSEMBLY 2-16.
3) Remove the tension spring ❶.
4) Remove the two stopper washers ❷.
5) Remove the screw ❸ and remove lock slider L assembly ❹.
6) Remove the two screws ❺ and remove the brake plunger ❻. (At this time, be sure not to touch or damage the T reel table assembly with a screwdriver.)

2. Mounting (See Fig. 7-37.)

1) Insert the brake plunger pin ❼ into the P arm hole ❽ and mount with the two screws ❺. (At this time, be sure not to touch or damage the T reel table assembly with a screwdriver.)
2) Mount lock slider L assembly ❹ and fix with screw ❸.
3) Fix the two stopper washers ❷.
4) Hook the tension spring ❶.
5) Mount the LS cassette compartment assembly in opposite procedure of Section 2. DISASSEMBLY 2-16.
6) Connect the CN018 connector (white) 3P to the SP-7 board.
7) Mount the SP-7 board in opposite procedure of Section 2. DISASSEMBLY 2-6.

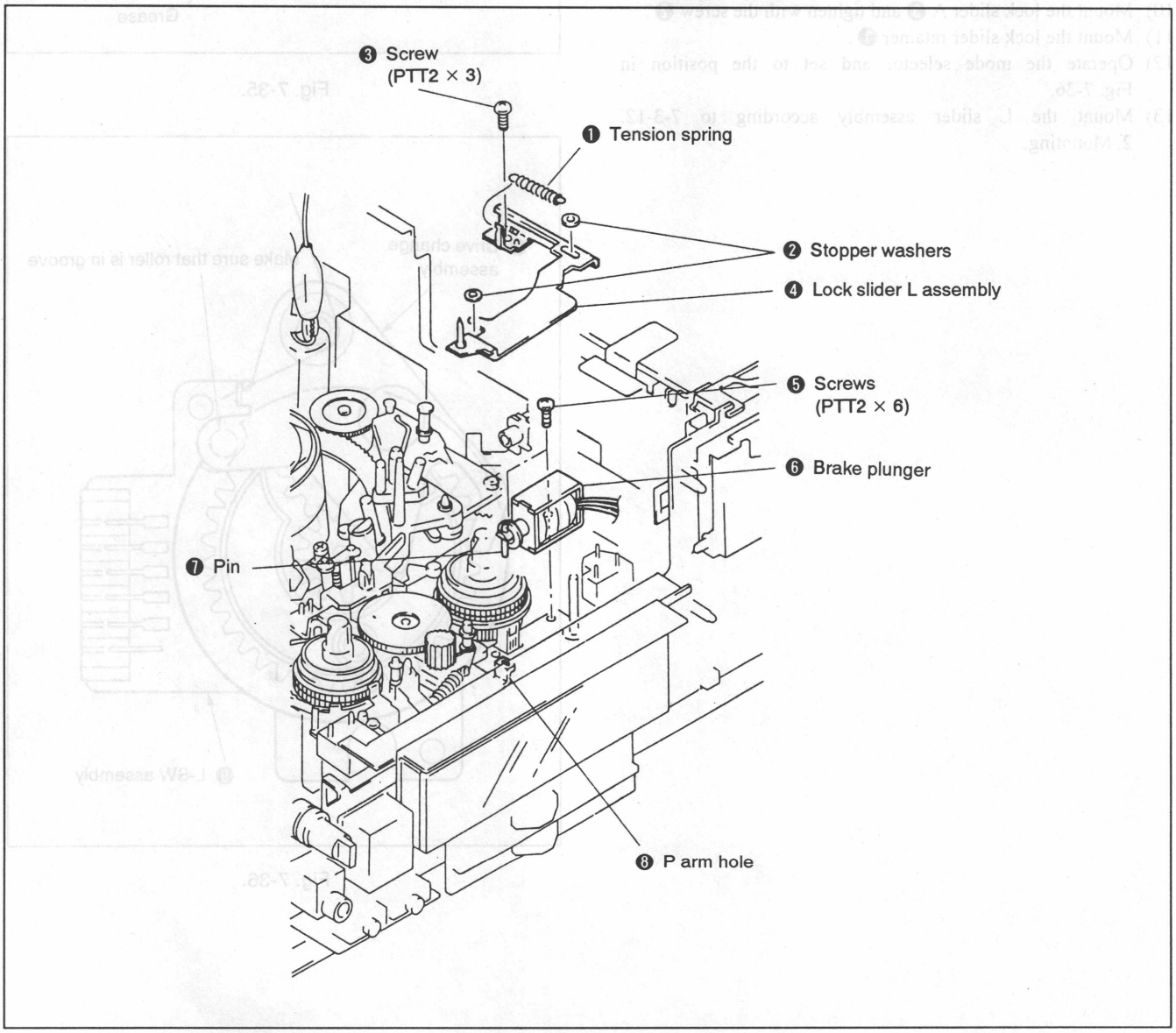

Fig. 7-37.

7-3-15. M-SW Assembly

1. Removal (See Figs. 7-38. and 7-39.)

1) Remove the T reel table assembly according to 7-3-3. (See Fig. 7-8.)
2) Remove stopper washer ❶ and remove the driving gear B assembly ❷.
3) Remove the LD-1 board ❸. (See Fig. 7-38.)
4) Remove lock slider L assembly according to 7-3-14. 1. Removal, 3) to 5).
5) Remove the tension spring ❹ and remove B release arm ❺.
6) Confirm that [EJECT] mode is set.
7) Remove stopper washer ❻ and remove the mode output gear ❼.
8) Remove the two claws ❾ of the control motor cover L ❽, and remove the push switch ❿.
9) Disconnect connector ⓫.
10) Remove three screws ⓬, and remove the control motor cover L ❽ and the M-SW assembly ⓭.
11) Remove solder Ⓐ and remove the DC motor ⓮.

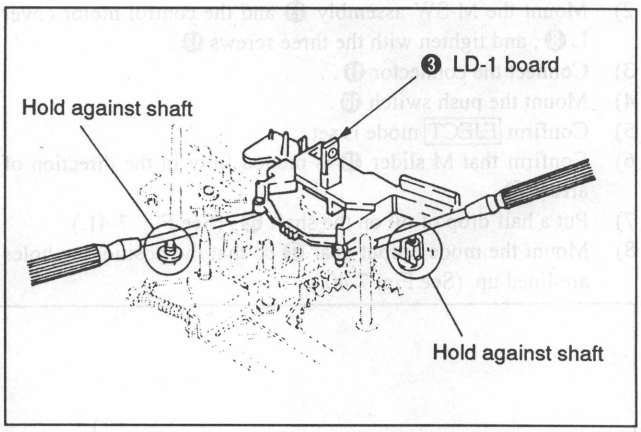

Fig. 7-38.

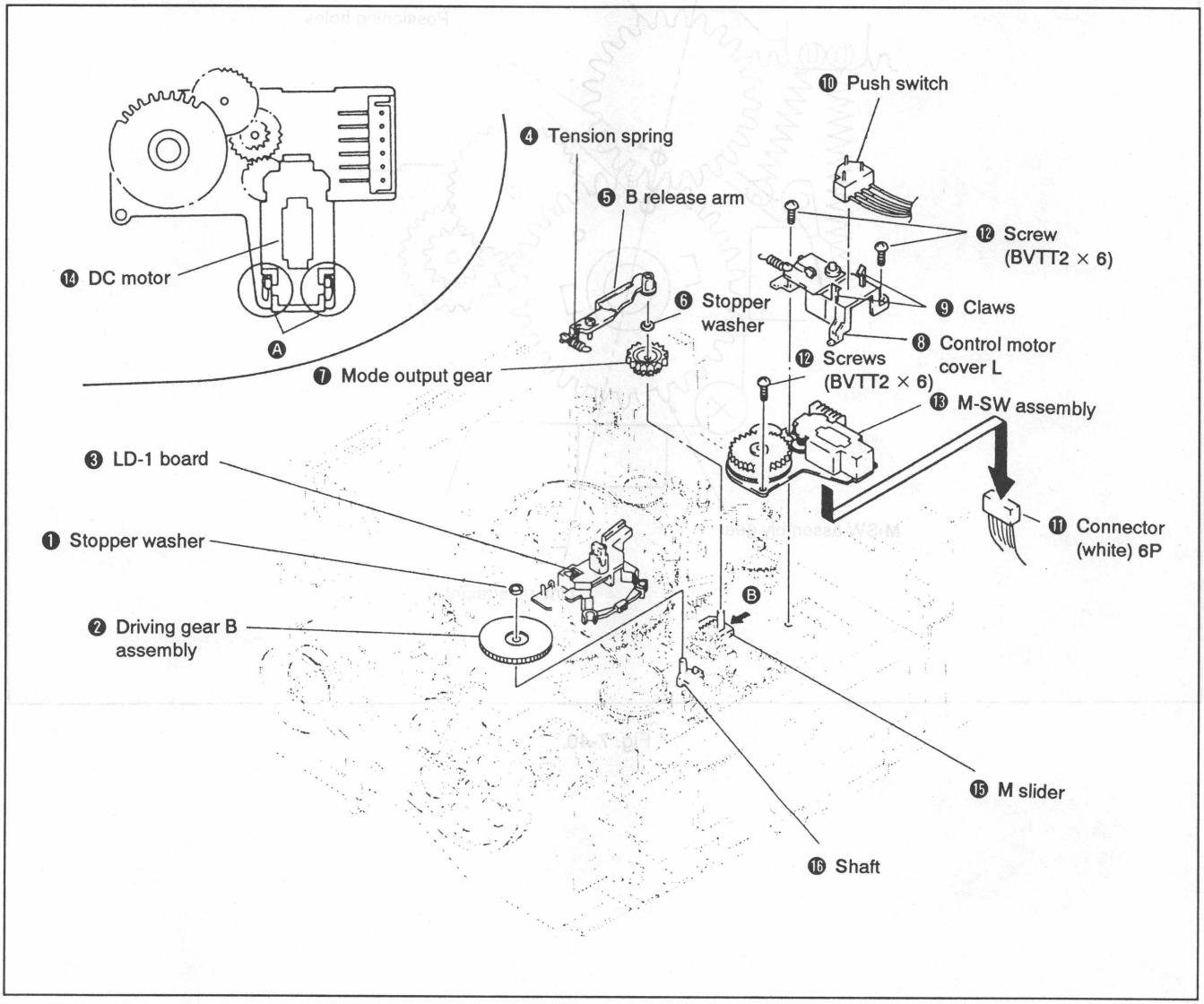

Fig. 7-39.

2. Mounting (See Figs. 7-39. and 7-40.)

1) Solder the DC motor ⓮.
2) Mount the M-SW assembly ⓭ and the control motor cover L ❽, and tighten with the three screws ⓬.
3) Connect the connector ⓫.
4) Mount the push switch ⓾.
5) Confirm [EJECT] mode is set.
6) Confirm that M slider ⓯ is moved fully in the direction of arrow Ⓑ.
7) Put a half drop of oil on the shaft ⓰. (See Fig. 7-41.)
8) Mount the mode output gear ❼ so that the positioning holes are lined up. (See Fig. 7-40.)
9) Fix stopper washer ❻.
10) Set to [LOADING/UNLOADING] mode.
11) Mount the B release arm ❺ and hook the tension spring ❹.
12) Mount the lock slider L assembly according to 7-3-14. 2. Mounting, 2) to 4).
13) Mount the LD-1 board ❸.
14) Mount the driving gear B assembly ❷ and fix the stopper washer ❶.
15) Mount the T reel table assembly according to 7-3-3. 2. Mounting.

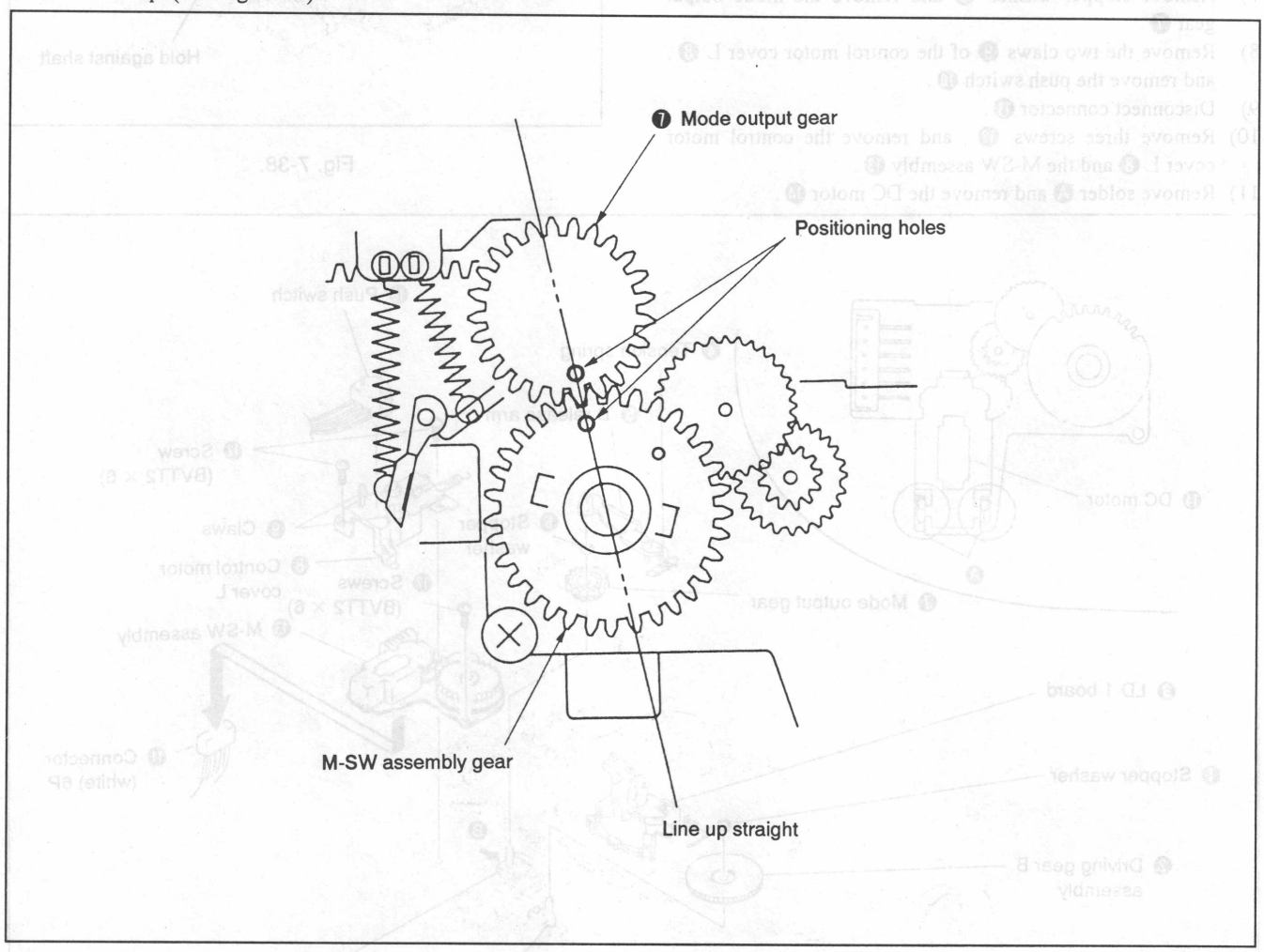

Fig. 7-40.

7-3-16. M Slider

1. Removal (See Fig. 7-41.)

1) Remove the pinch press arm assembly according to 7-3-4. 1. Removal. (See Fig. 7-9.)
2) Remove the tension regulator arm assembly according to 7-3-5 1. Removal. (See Fig. 7-10.)
3) Remove the tension regulator band assembly according to 7-3-6. 1. Removal. (See Fig. 7-11.)
4) Remove the threading ring assembly according to 7-3-8. 1. Removal. (See Fig. 7-13.)
5) Perform 7-3-15. 1. Removal, 1) to 5). (See Figs. 7-38. and 7-39.)
6) Remove the tension regulator load arm assembly according to 7-3-12. 1. Removal, 8). (See Fig. 7-31.)
7) Remove the tension spring ❶.
8) Remove the two stopper washers ❷ and remove the S main brake assembly ❸ and the T main brake assembly ❹.
9) Set to [LOADING TOP] and [LOADING/UNLOADING] modes.
10) Remove the two screws ❺ and the driving complete assembly ❻.
11) Perform 7-3-15. 1. Removal, 6). and 7). (See Fig. 7-39.)
12) Remove the two tension springs ❼.
13) Remove the REW brake assembly ❽.
14) Remove the stopper washer ❾ and remove the B release slider ❿.
15) Remove stopper washer ⓫, and remove the ring lock spring ⓬ and RL arm ⓭.
16) Move the M slider ⓮ to the right. (Leave about 5 mm at the left.)
17) Remove the E ring ⓯ and remove the pinch press lever assembly ⓰.
18) Remove the spring ⓱ and remove the hard brake S ⓲.
19) Remove the stopper washer ⓳, push the mode arm ⓴ in the direction of the arrow, and lift up the left side of the M slider ⓮ to remove.

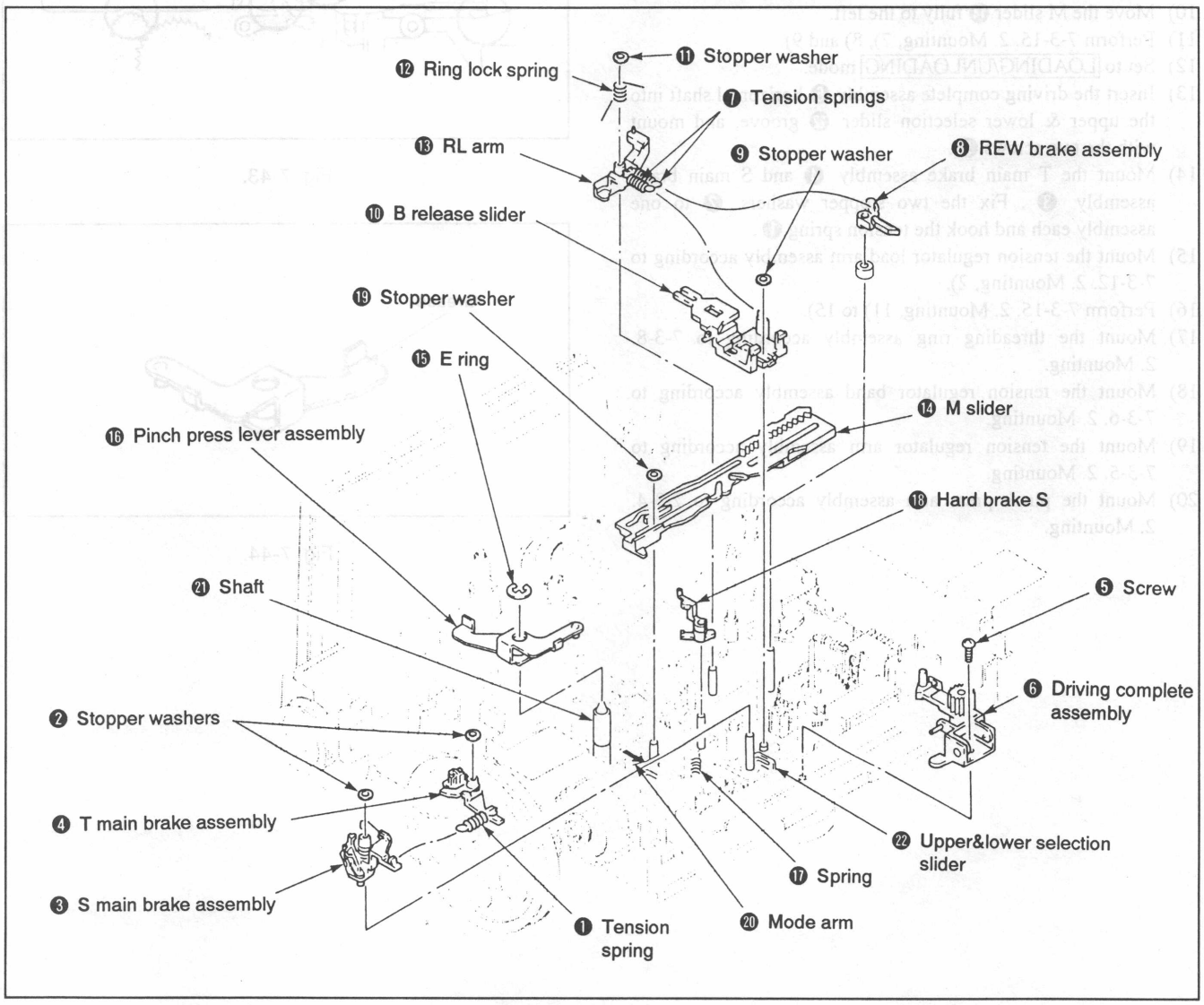

Fig. 7-41.

2. Mounting (See Figs. 7-41. through 7-44.)

1) Grease. (See Fig. 7-42.)
2) Push mode arm ⓴ in the direction of the arrow, and mount the M slider ⓮, noting the positioning of the other parts in Fig. 7-45, and fix the stopper washer ⓳.
3) Mount the hard brake S ⓲ and hook the spring ⓱.
4) Grease. (See Fig. 7-44.)
5) Put a half drop of oil from the shaft ㉑ groove to the bottom, mount the pinch press lever assembly ⓰ and insert the E ring ⓯.
6) Mount the RL arm ⓭, hook the ring lock spring ⓬ and fix the stopper washer ⓫.
7) Mount the B release slider ⓾ and fix stopper washer ❾.
8) Mount the REW brake assembly ❽.
9) Hook the two tension springs ❼.

Note: Hook the two springs as follows, being careful not to mix them up.

- B release slider spring:
  ·····total diameter 2 mm, wire diameter 0.18 mm
- REW brake assembly spring:
  ····total diameter 1.6 mm, wire diameter 0.12 mm

10) Move the M slider ⓮ fully to the left.
11) Perform 7-3-15. 2. Mounting, 7), 8) and 9).
12) Set to [LOADING/UNLOADING] mode.
13) Insert the driving complete assembly ❻ horizontal shaft into the upper & lower selection slider ㉒ groove, and mount with the two screws ❺.
14) Mount the T main brake assembly ❹ and S main brake assembly ❸. Fix the two stopper washers ❷ to one assembly each and hook the tension spring ❶.
15) Mount the tension regulator load arm assembly according to 7-3-12. 2. Mounting, 2).
16) Perform 7-3-15. 2. Mounting, 11) to 15).
17) Mount the threading ring assembly according to 7-3-8. 2. Mounting.
18) Mount the tension regulator band assembly according to 7-3-6. 2. Mounting.
19) Mount the tension regulator arm assembly according to 7-3-5. 2. Mounting.
20) Mount the pinch press arm assembly according to 7-3-4. 2. Mounting.

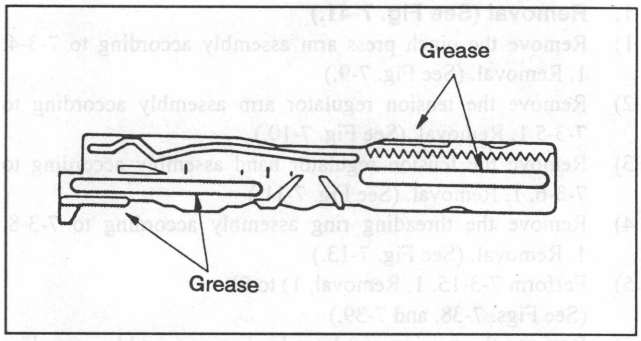

Fig. 7-42.

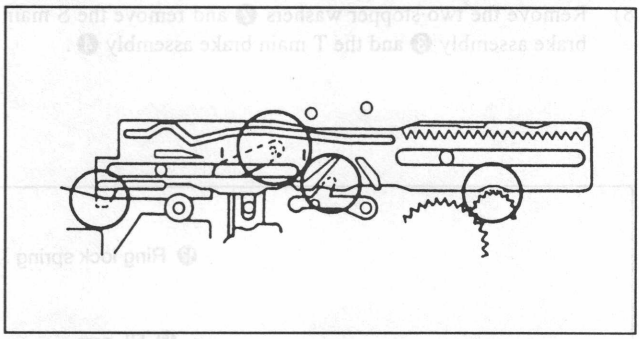

Fig. 7-43.

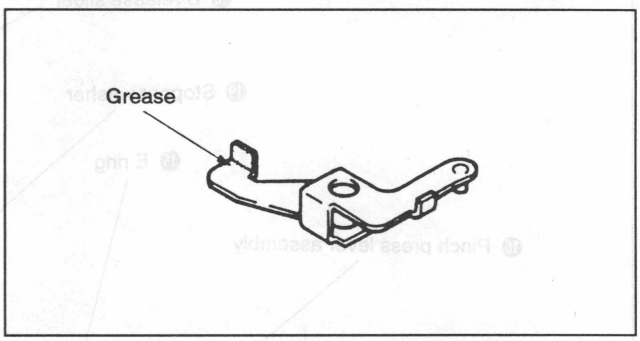

Fig. 7-44.

7-3-17. Capstan Motor

1. Removal (See Fig. 7-45.)

1) Remove the threading ring assembly according to 7-3-8. 1. Removal. (See Fig. 7-13.)
2) Open the SP-7 board according to Section 2. DISASSEMBLY 2-6.
3) Remove the connector ❶ from the SP-7 board.
4) Remove the connector ❷ from the RS-17 board.
5) Remove the two screws ❸ and remove the rotor holding plate ❹.
6) Remove the two screws ❺ and remove the capstan motor ❻ in the direction of the arrow.

2. Mounting (See Fig. 7-45.)

1) Mount the capstan motor ❻ and tighten with two screws ❺.
2) Mount the rotor holding plate ❹ and fix with two screws ❸.
3) Connect the connector ❶ to the SP-7 board and connector ❷ to the RS-17 board.
4) Mount the threading ring assembly according to 7-3-8. 2. Mounting. (See Figs. 7-13 and 7-14.)
5) Mount the SP-7 board in opposite procedure of Section 2. DISASSEMBLY 2-6.

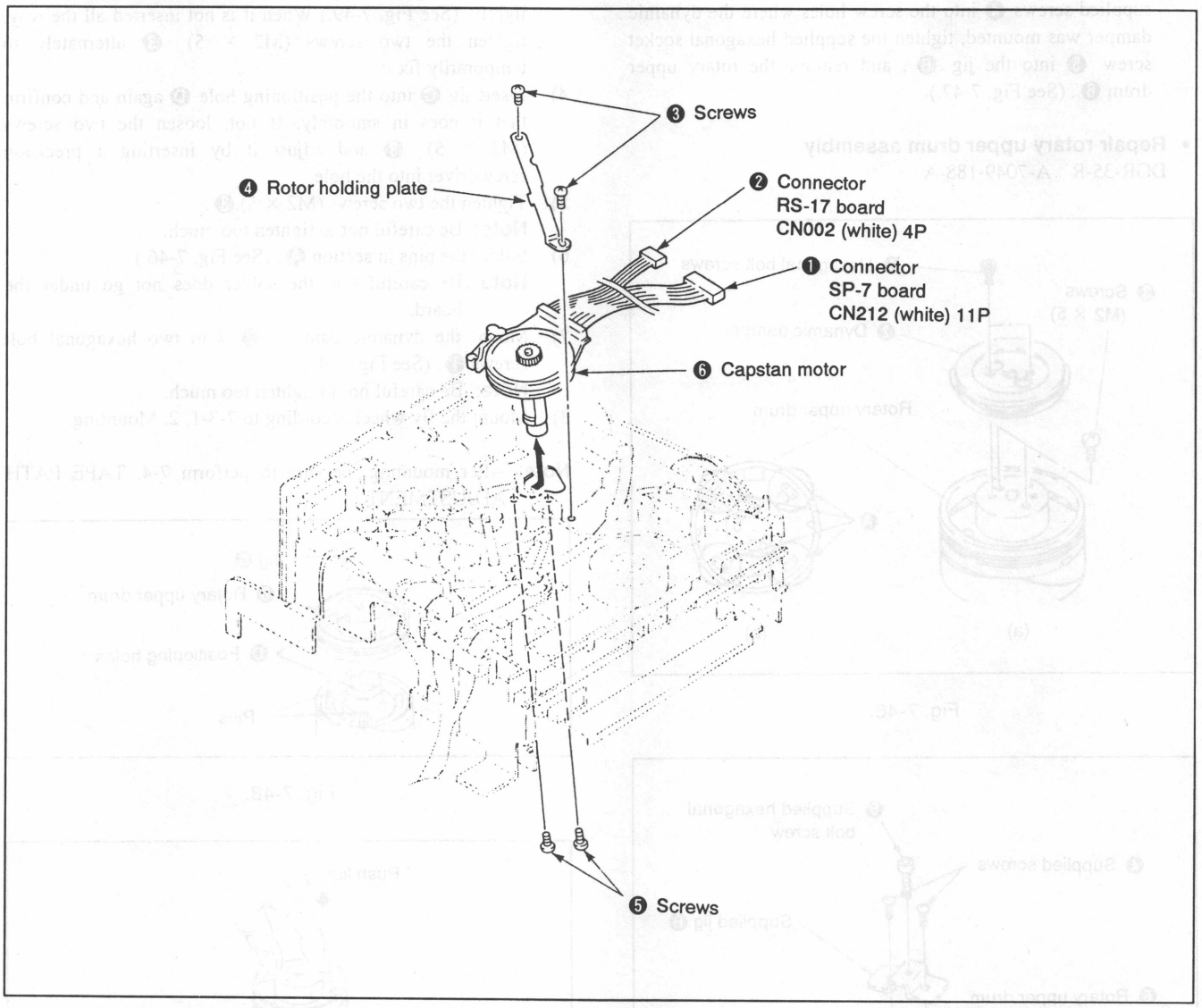

Fig. 7-45.

7-3-18. Replacement of Rotary Upper Drum

1. Removal

• If recording is possible, remove after recording.

1) Remove the fly wheel according to 7-3-1. 1. Removal. Removal.
2) Remove the two hexagonal bolt screws ❶, and remove the dynamic damper ❷. (See Fig. 7-46.)
3) Remove all ten solders in section Ⓐ and confirm that the board and the pins on the bottom can move freely, using tweezers or the like. (See Fig. 7-46.)
4) Remove the two screws (M2 × 5) ❸. (See Fig. 7-46.)
5) Mount the jig Ⓑ (Ref. No. J-11) by inserting the two supplied screws ❹ into the screw holes where the dynamic damper was mounted, tighten the supplied hexagonal socket screw ❺ into the jig Ⓑ, and remove the rotary upper drum ❻. (See Fig. 7-47.)

• **Repair rotary upper drum assembly**
DGR-35-R A-7049-188-A

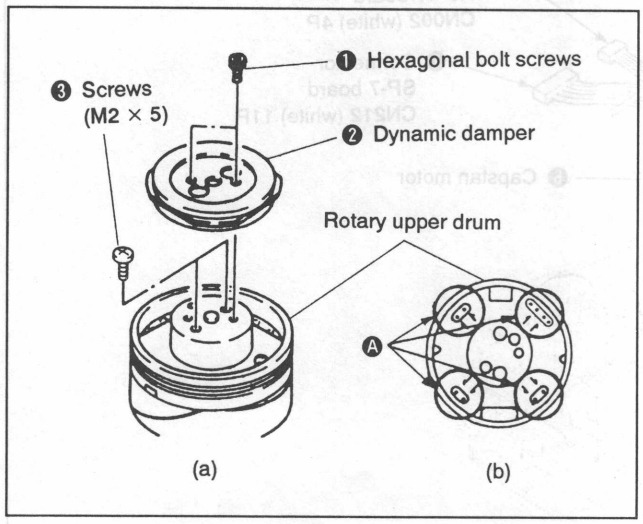

Fig. 7-46.

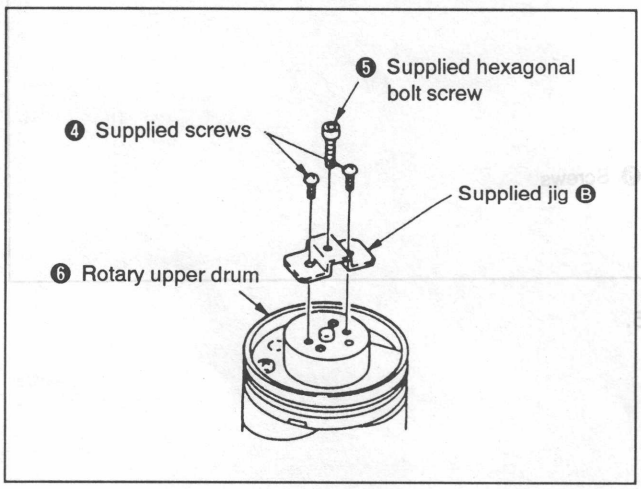

Fig. 7-47.

2. Mounting

1) Clean the flange surface and the surface of the rotary upper drum which contacts it, and confirm that there is no dirt or scratches.
2) Lightly push in the rotary upper drum while using the jig Ⓒ (Ref. No. J-11)to line up the rotary upper drum ❻ and positioning holes Ⓓ. Confirm that the pins are above the board hole of the rotary upper drum at this time. Use tweezers, etc. for correction if the pins catch. (See Fig. 7-48.)
3) Remove jig Ⓒ and push the rotary upper drum in by hand, lightly. (See Fig. 7-49.) When it is not inserted all the way, tighten the two screws (M2 × 5) ❸ alternately to temporarily fix it.
4) Insert jig Ⓒ into the positioning hole Ⓓ again and confirm that it goes in smoothly. If not, loosen the two screws (M2 × 5) ❸ and adjust it by inserting a precision screwdriver into the hole.
5) Tighten the two screws (M2 × 5) ❸.
   Note: Be careful not to tighten too much.
6) Solder the pins in section Ⓐ. (See Fig. 7-46.)
   Note: Be careful that the solder does not go under the board.
7) Mount the dynamic damper ❷ with two hexagonal bolt screws ❶. (See Fig. 7-46.)
   Note: Be careful not to tighten too much.
8) Mount the fly wheel according to 7-3-1. 2. Mounting.

Note: After mounting, be sure to perform 7-4. TAPE PATH ADJUSTMENT.

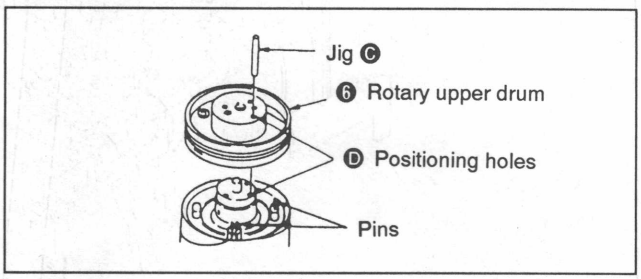

Fig. 7-48.

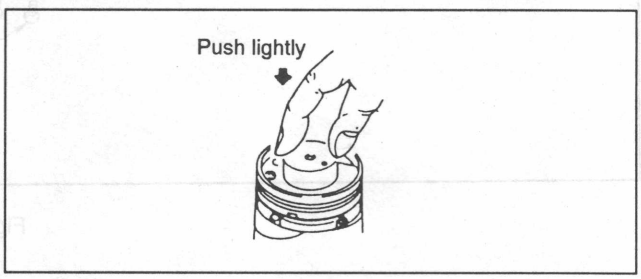

Fig. 7-49.

7-3-19. Drum Assembly Replacement

[Precautions for mounting the drum assembly]

1. When using a magnetized screwdriver for mounting the drum assembly, attach in the position shown in the diagram below to prevent the magnetized screwdriver from affecting the head tip position.
2. After mounting, be sure to perform 7-4. TAPE PATH ADJUSTMENT.

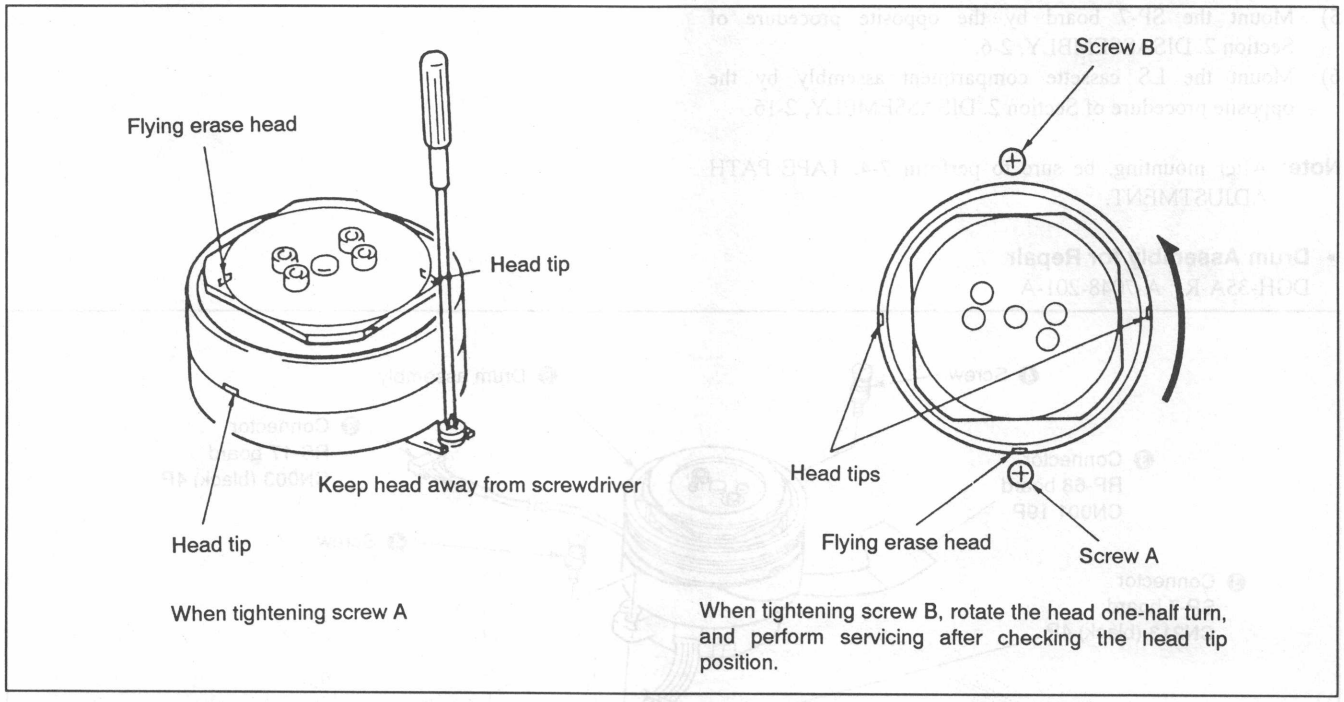

Fig. 7-50.

1. Removal (See Fig. 7-51. and 7-52.)

1) Remove the LS cassette compartment assembly according to Section 2. DISASSEMBLY, 2-16.
2) Open the SP-7 board according to Section 2. DISASSEMBLY, 2-6.
3) Remove the fly wheel according to 7-3-1. 1. Removal
4) Remove the screw ❶ and remove the shaft ground terminal ❷. (See Fig. 7-51.)
5) Remove the three connectors ❸.
6) Remove the two screws ❹.
7) Remove the drum assembly ❺.

Note: Make sure that the drum assembly does not come into contact with the No. 3 guide and IP roller guide, etc., at this time.

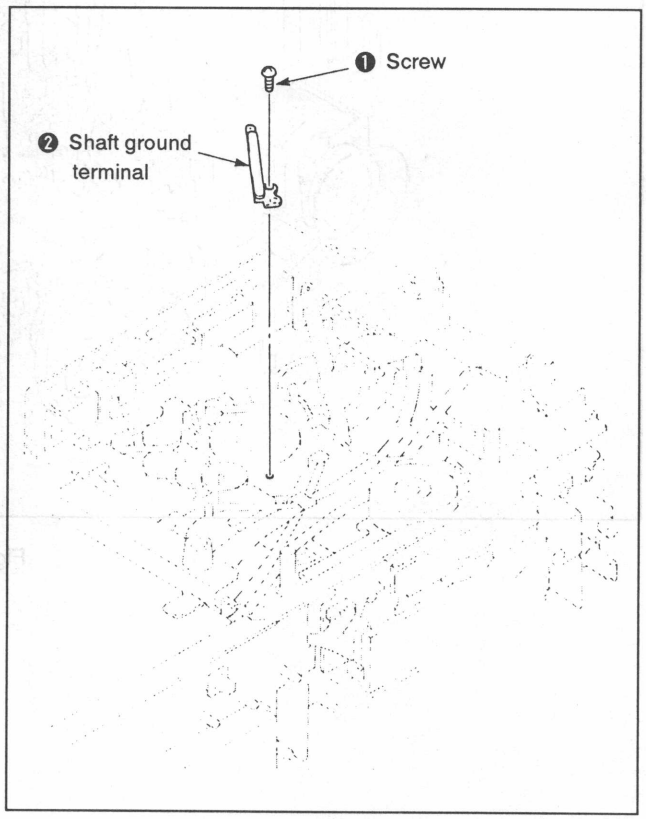

Fig. 7-51.

2. Mounting (See Fig. 7-51. and 7-52.)

1) Mount the drum assembly ❺ with the two screws ❹.
2) Connect the three connectors ❸.
3) Mount the shaft ground terminal ❷ with the screw ❶. (See Fig. 7-51.)
4) Mount the fly wheel according to 7-3-1. 2. Mounting.
5) Mount the SP-7 board by the opposite procedure of Section 2. DISASSEMBLY, 2-6.
6) Mount the LS cassette compartment assembly by the opposite procedure of Section 2. DISASSEMBLY, 2-16.

Note: After mounting, be sure to perform 7-4. TAPE PATH ADJUSTMENT.

- **Drum Assembly for Repair**
  DGH-35A-R A-7048-201-A

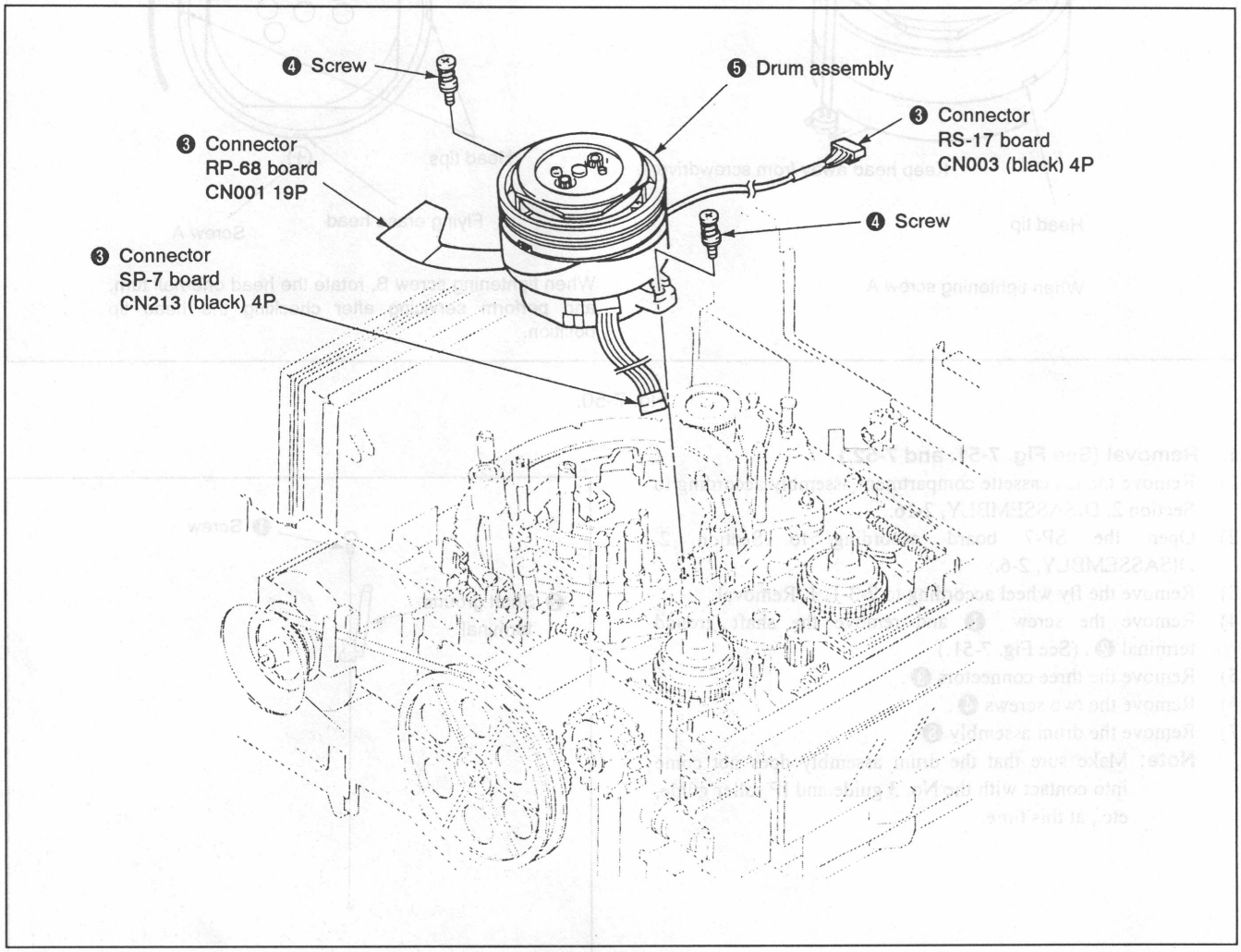

Fig. 7-52.

7-3-20. Adjustment after Replacement of No. 3 Guide and No. 4 Guide

For replacement of both No. 3 and No. 4 guides, line up the tape along the upper flange after replacing.

7-3-21. No. 5 Guide Assembly

1. Removal (See Fig. 7-53.)

1) Remove the LS cassette compartment assembly according to Section 2. DISASSEMBLY 2-16.
2) Remove the fly wheel according to 7-3-1. 1. Removal.
3) Remove the three screws ❶ and remove the No. 5 guide assembly.
4) Remove the guide nut ❷ and remove No. 5 guide boss ❸, No. 5 guide flange ❹, No. 5 guide ❺ and compression spring ❻.

2. Mounting (See Fig. 7-53.)

1) Mount the compression spring ❻, No. 5 guide ❺, No. 5 guide flange ❹ and No. 5 guide boss ❸ to the No. 5 guide shaft ❼, and tighten the guide nut ❷.
2) Mount the No. 5 guide assembly and tighten with the three screws ❶.
3) Mount the fly wheel according to 7-3-1. 2. Mounting.
4) Mount the LS cassette compartment assembly in opposite procedure of Section 2. DISASSEMBLY 2-16.

Note: Be sure to perform 7-4. TAPE PATH ADJUSTMENT after mounting.

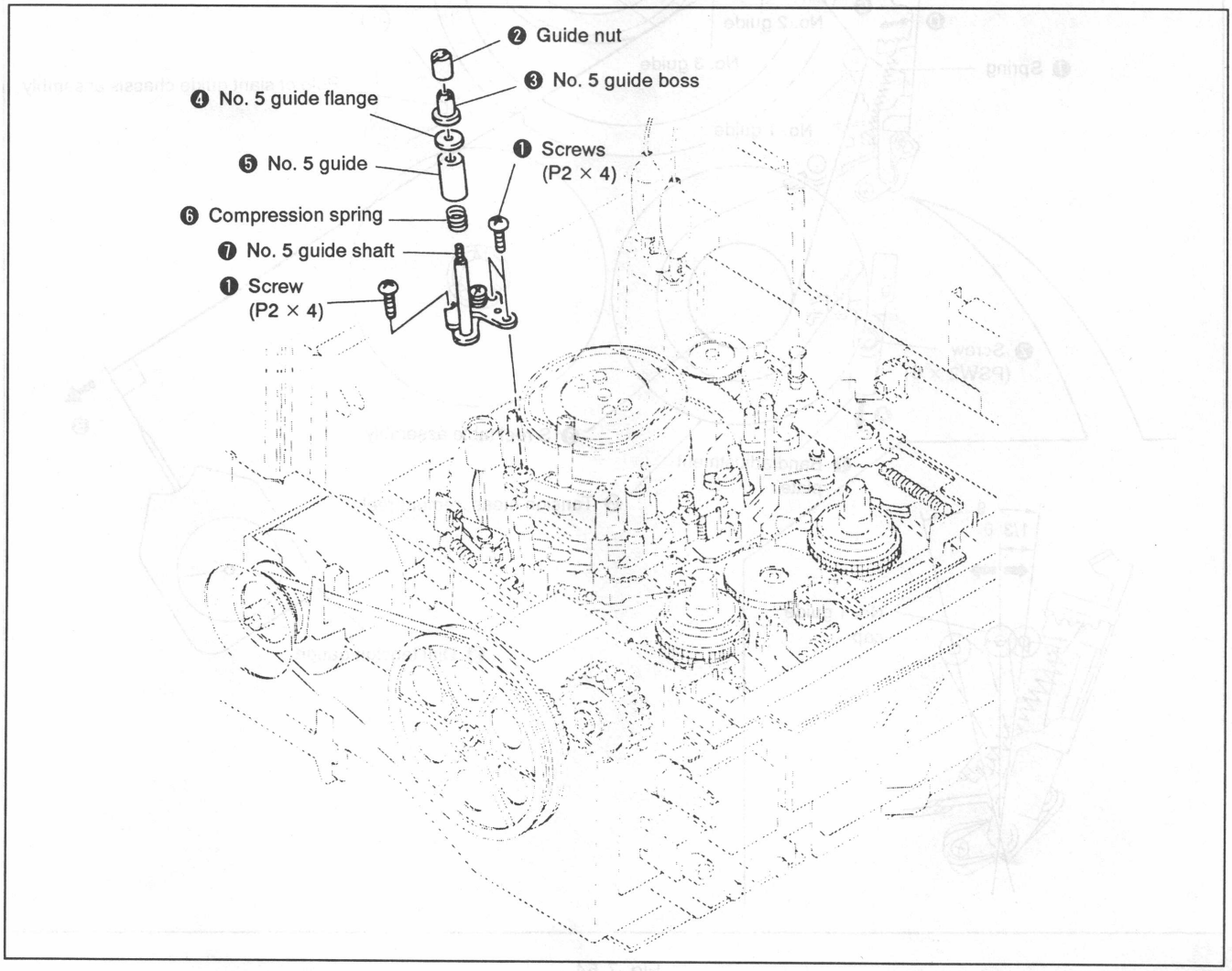

Fig. 7-53.

7-3-22. FWD Back Tension Adjustment (See Fig. 7-54.)

1) Remove the LS cassette compartment assembly according to Section 2. DISASSEMBLY 2-16.
2) Remove the mechanism block according to Section 2. DISASSEMBLY 2-15.
3) Set to LOADING END, FWD modes.
4) Loosen band adjustment plate ❶ screw ❷ and move the band adjustment plate ❶ in the direction of arrow Ⓐ. And confirm the range of movement θ for No. 1 guide.
5) Tighten the screw ❷ so that the position of No. 1 guide cap is 1/3 θ
6) Place the tension measurement reel (Ref. No. J-7) ❹ on the S reel table assembly ❸ and set the tape along No. 1 guide, No. 2 guide, No. 3 guide, IP roller guide and the drum.
7) Pull the dial tension gauge (Ref. No. J-6) ❺ in the direction of arrow Ⓑ and hook the spring ❼ onto the tension regulator spring hook assembly ❻ so that the value becomes 13.0 ± 1g, as shown below.
   Value too large: arrow Ⓒ direction
   Value too small: arrow Ⓓ direction

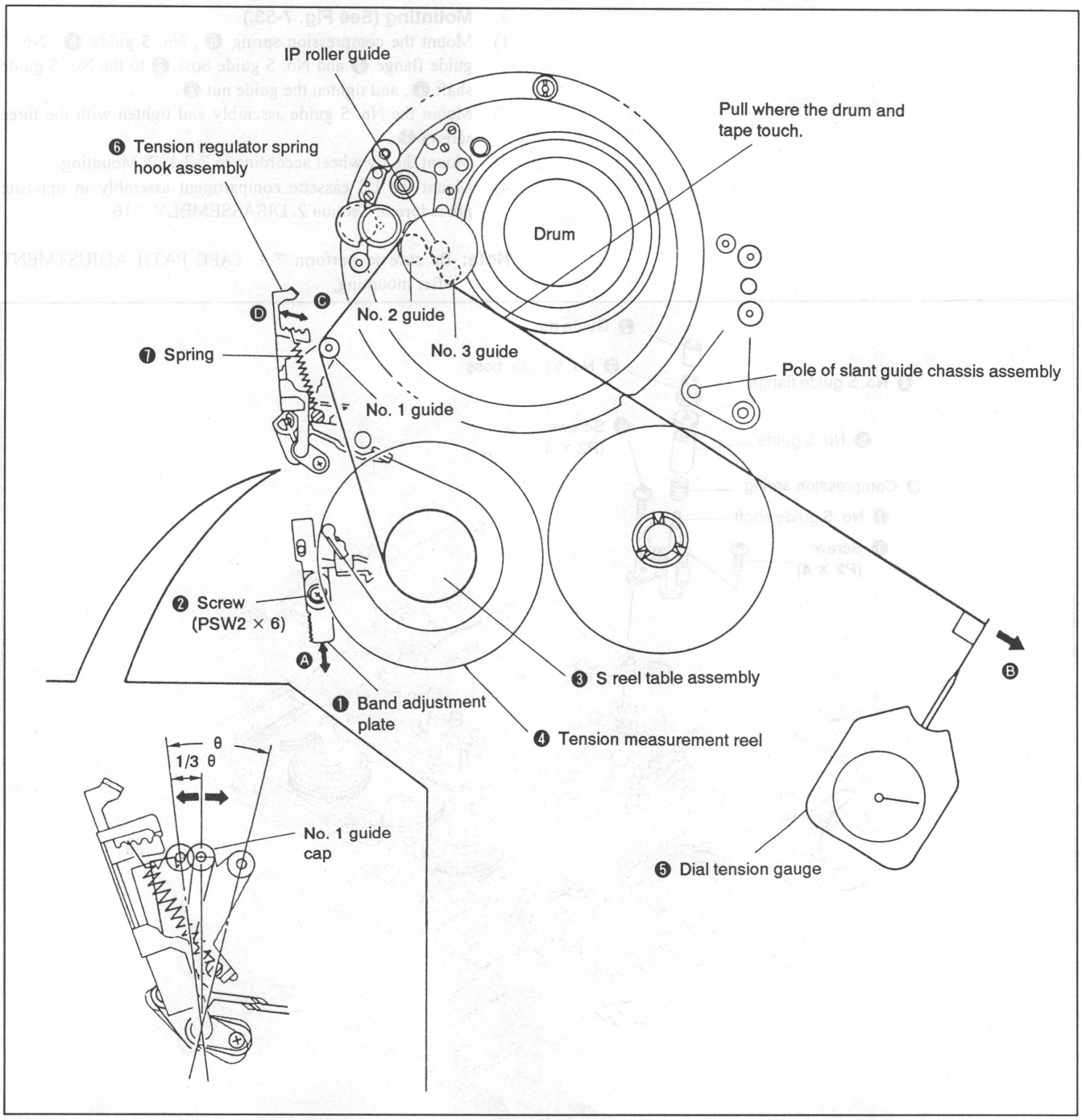

Fig. 7-54.

7-3-23. Reel Motor Replacement

1. Removal (See Fig. 7-55.)

1) Open the SP-7 board according to Section 2. DISASSEMBLY, 2-6.
2) Remove the two screws ❶ and remove the reel motor bracket ❷.
3) Remove the connector ❸.
4) Remove the three screws ❹ and remove the reel motor ❺ in the direction of arrow.

2. Mounting (See Fig. 7-55.)

1) Mount the reel motor ❺ to the reel motor bracket ❷ with the three screws ❹.
2) Mount the connector ❸.
3) Mount the reel motor assembly with the two screws ❶.
4) Mount the SP-7 board by the opposite procedure of Section 2. DISASSEMBLY, 2-6.

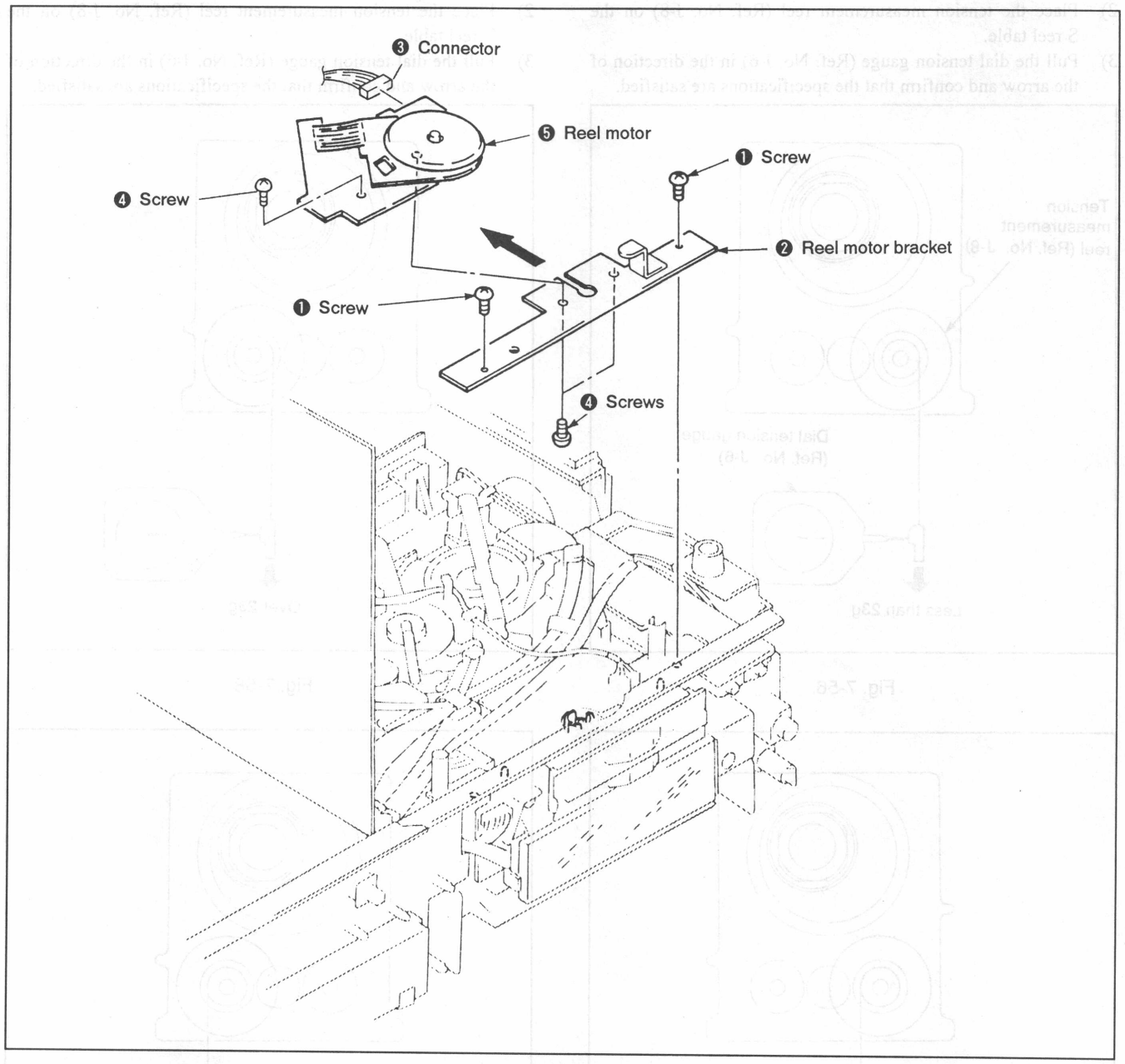

Fig. 7-55.

7-3-24. Check of S and T Main Brake Torques

1) Remove the front panel according to Section 2. DISASSEMBLY 2-2.
2) Remove the LS cassette compartment assembly according to Section 2. DISASSEMBLY 2-16.

1. S main brake torque (See Figs. 7-56. and 7-57.)

1) Set to FF/REW mode.
2) Place the tension measurement reel (Ref. No. J-8) on the S reel table.
3) Pull the dial tension gauge (Ref. No. J-6) in the direction of the arrow and confirm that the specifications are satisfied.

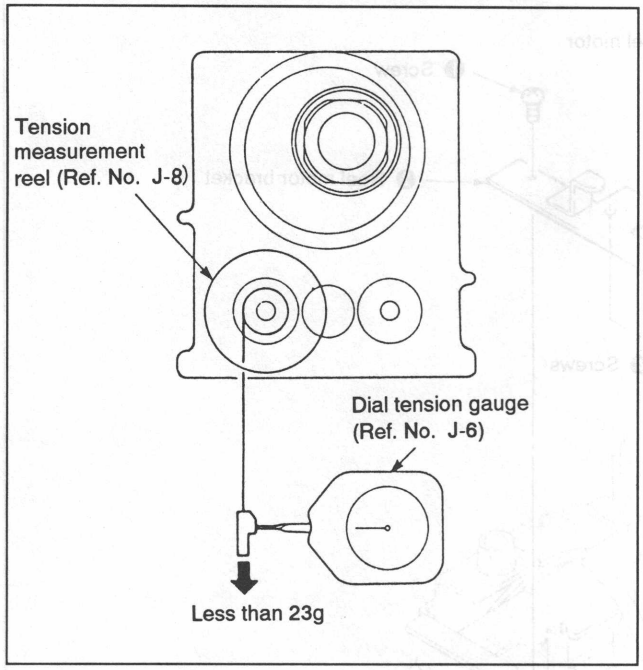

Fig. 7-56.

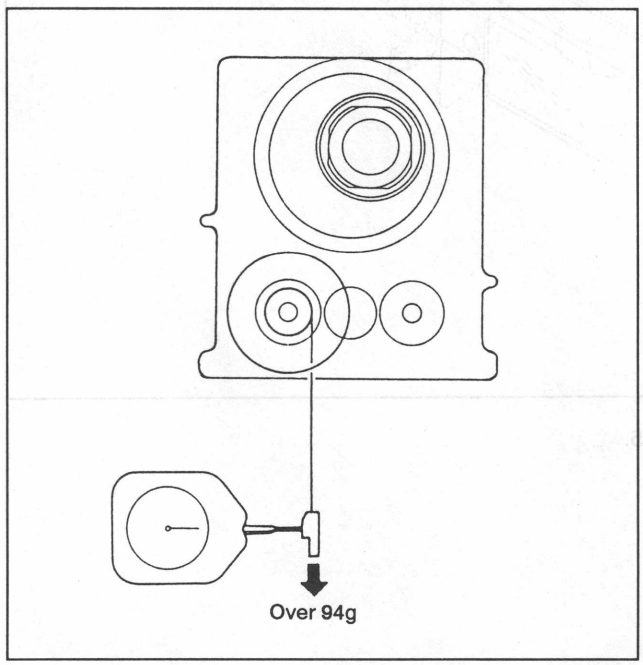

Fig. 7-57.

2. T main brake torque (See Figs. 7-58. and 7-59.)

1) Set to FF/REW mode.
2) Place the tension measurement reel (Ref. No. J-8) on the T reel table.
3) Pull the dial tension gauge (Ref. No. J-6) in the direction of the arrow and confirm that the specifications are satisfied.

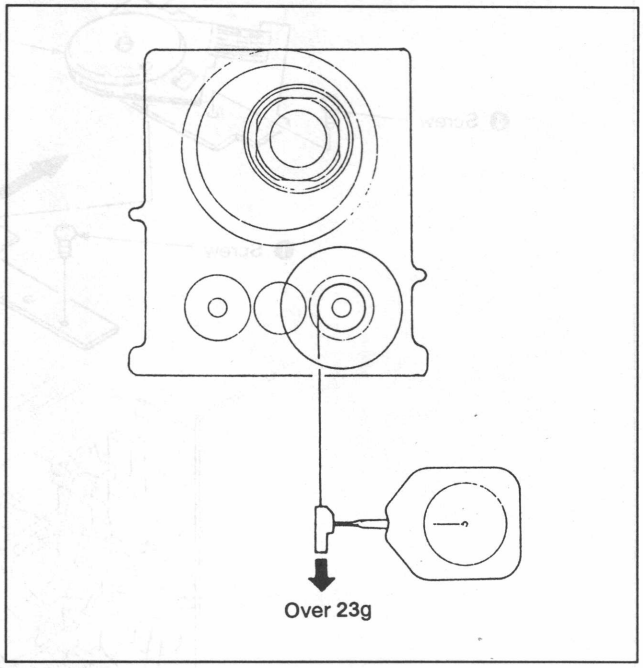

Fig. 7-58.

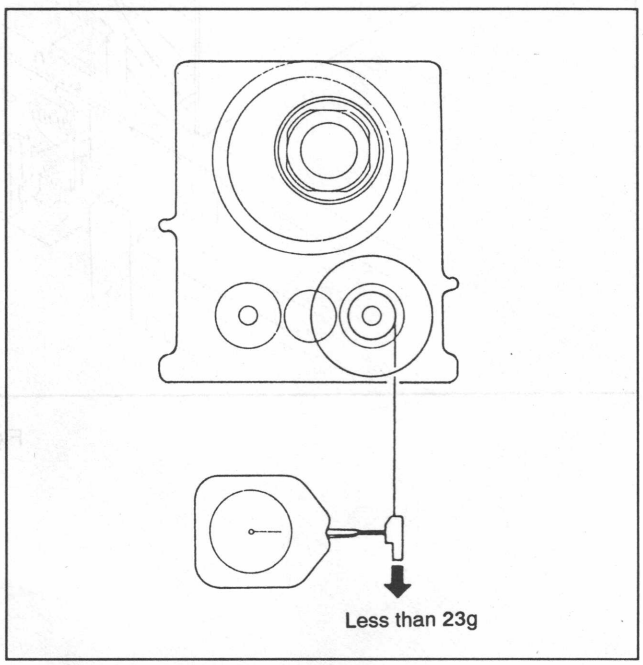

Fig. 7-59.

7-3-25. Check of S and T Soft Brake Torques

1) Remove the front panel according to Section 2. DISASSEMBLY 2-2.
2) Remove the LS cassette compartment assembly according to Section 2. DISASSEMBLY 2-16.

1. S soft brake torque (See Fig. 7-60.)

1) Set to [FF/REW] mode.
2) Place the tension measurement reel (Ref. No. J-8) on the S reel table.
3) Release the S main brake with a finger.
4) Pull the dial tension gauge (Ref. No. J-6) in the direction of the arrow and confirm that the specifications are satisfied.

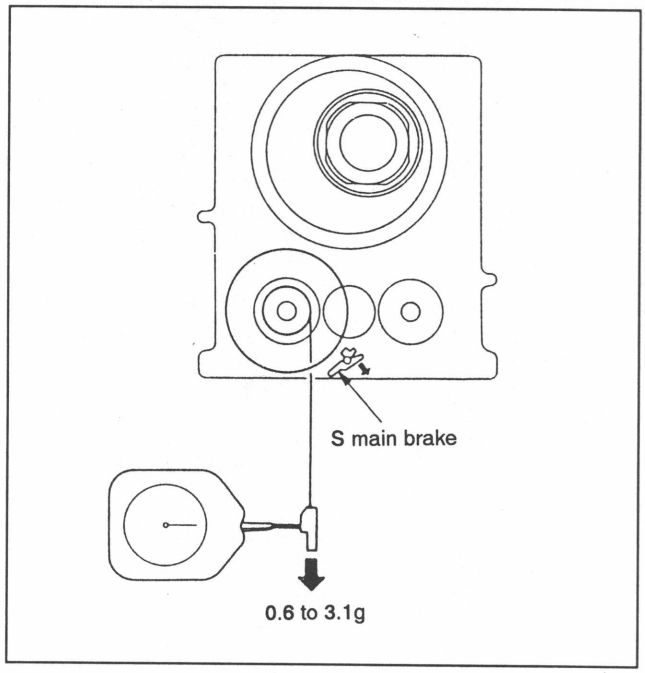

Fig. 7-60.

2. T soft brake torque (See Fig. 7-61.)

1) Set to [REV] mode.
2) Place the tension measurement reel (Ref. No. J-8) on the T reel table.
3) Release the T main brake with a finger.
4) Pull the dial tension gauge (Ref. No. J-6) in the direction of the arrow and confirm that the specifications are satisfied.

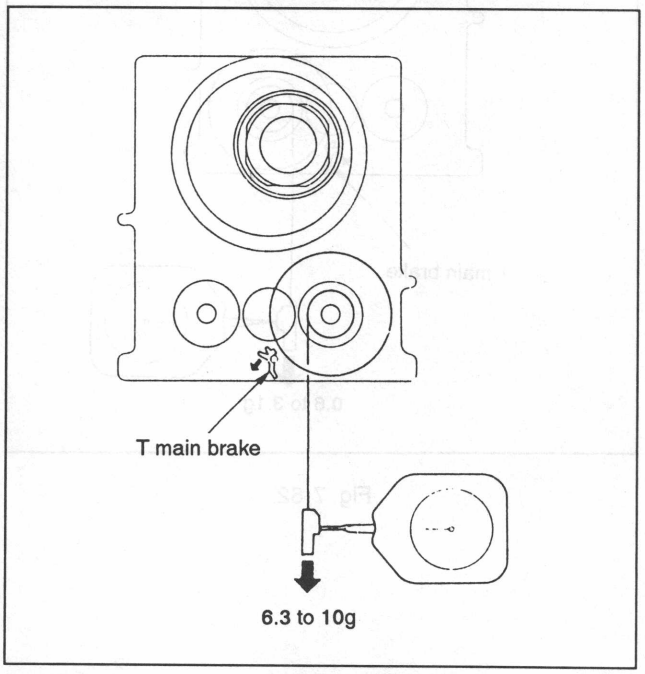

Fig. 7-61.

7-3-26. Check of REW Brake Torque (See Fig. 7-62.)

1) Set to [FF/REW] mode.
2) Place the tension measurement reel (Ref. No. J-8) on the T reel table.
3) Release the T main brake with a finger.
4) Pull the dial tension gauge (Ref. No. J-6) in the direction of the arrow and confirm that the specifications are satisfied.

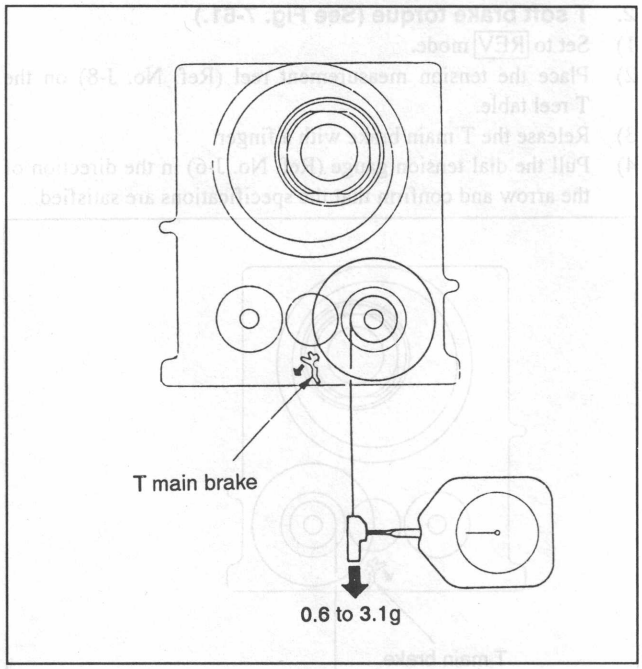

Fig. 7-62.

7-3-27. Check by FWD and RVS Winding Torque Cassette

1) Insert the FWD and RVS winding torque cassette (Ref. No. J-12).
2) Set to playback mode and confirm that T reel table torque is 7.5 to 14.5 g•cm.
3) Replace on appropriate reel table if the above specifications are not satisfied.

7-4. TAPE PATH ADJUSTMENT
TAPE RUNNING SYSTEM DIAGRAM

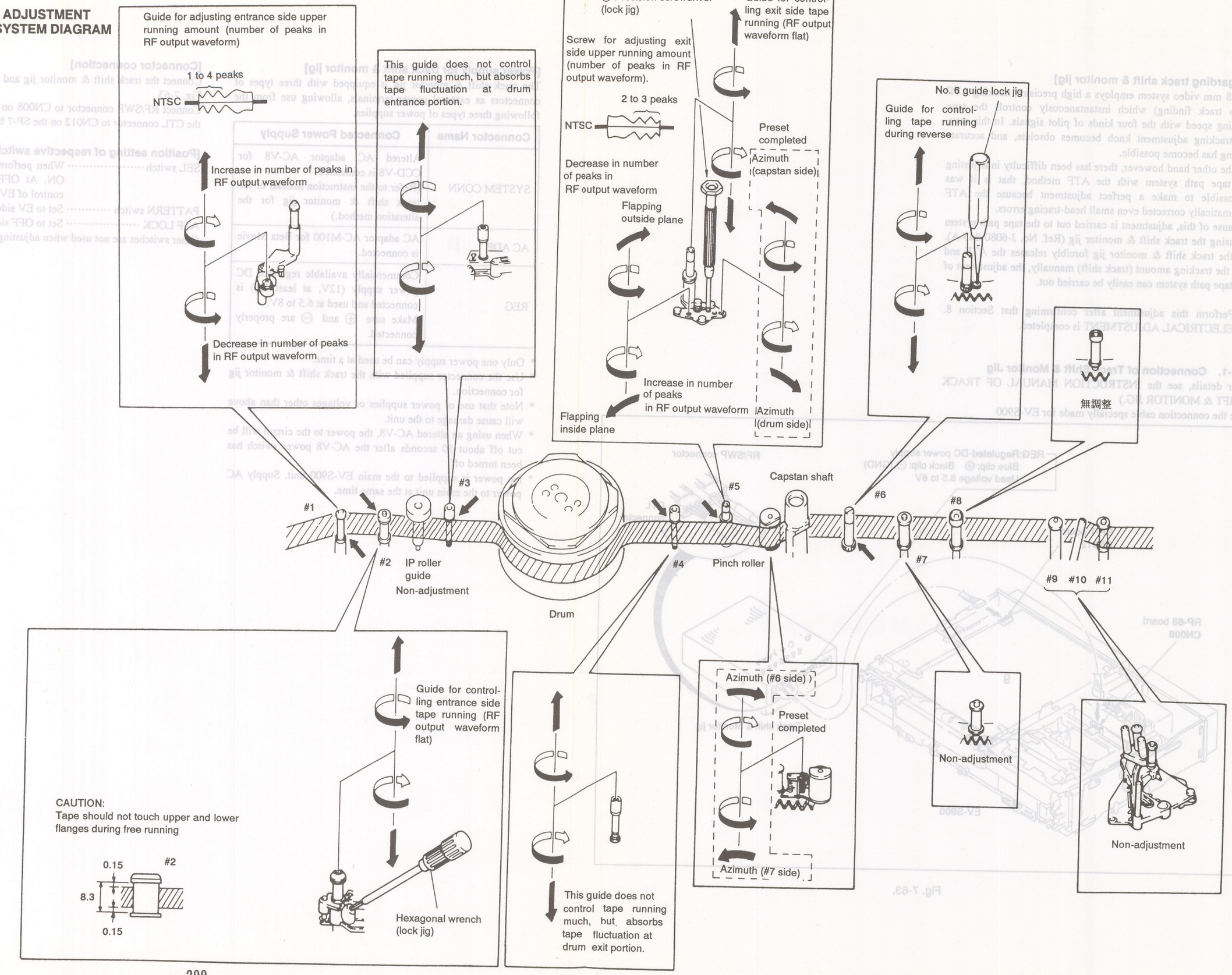

[Regarding track shift & monitor jig]

The 8 mm video system employs a high precision tracking ATF (auto track finding) which instantaneously controls the tape running speed with the four kinds of pilot signals. In this way, the tracking adjustment knob becomes obsolete, and accurate tracing has become possible.

On the other hand however, there has been difficulty in adjusting the tape path system with the ATF method, that is it was impossible to make a perfect adjustment because the ATF automatically corrected even small head-tracing errors.

Because of this, adjustment is carried out to the tape path system by using the track shift & monitor jig (Ref. No. J-6080-843-A). As the track shift & monitor jig forcibly releases the ATF and sets the tracking amount (track shift) manually, the adjustment of the tape path system can easily be carried out.

- Perform this adjustment after confirming that Section 8. ELECTRICAL ADJUSTMENT is completed.

7-4-1. Connection of Track Shift & Monitor Jig

(For details, see the INSTRUCTION MANUAL OF TRACK SHIFT & MONITOR JIG.)

Use the connection cable specially made for EV-S900

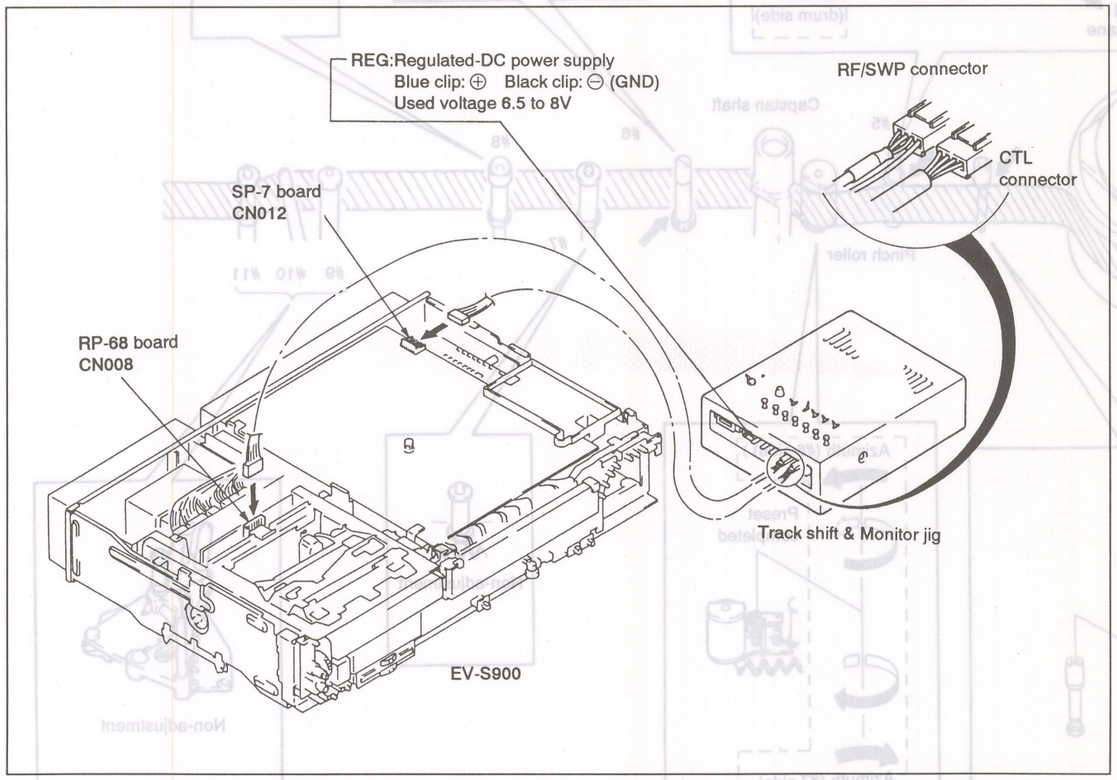

Fig. 7-63.

[Power supply for track shift & monitor jig]

The track shift & monitor jig is equipped with three types of connectors as external power terminals, allowing use from the following three types of power supplies.

Connector Name	Connected Power Supply
SYSTEM CONN	Altered AC adaptor AC-V8 for CCD-V8 is connected. (Refer to the instruction manual of the track shift & monitor jig for the alteration method.)
AC ADP	AC adaptor AC-M100 for Beta Movie is connected.
REG	Commercially available regulated DC power supply (12V, at least 3A) is connected and used at 6.5 to 8V. Make sure ⊕ and ⊖ are properly connected.

* Only one power supply can be used at a time.
* Use the connector supplied with the track shift & monitor jig for connection.
* Note that use of power supplies or voltages other than above will cause damage to the unit.
* When using an altered AC-V8, the power to the circuit will be cut off about 10 seconds after the AC-V8 power switch has been turned off.
* No power is supplied to the main EV-S900 unit. Supply AC power to the main unit at the same time.

[Connector connection]

Connect the track shift & monitor jig and EV-S900 as shown in Fig. 7-63.

Connect RF/SWP connector to CN008 on the RP-68 board, and the CTL connector to CN012 on the SP-7 board.

[Position setting of respective switches]

SEL switch ····· When performing track shift, set to ON. At OFF position it becomes control of EV-S900 side.
PATTERN switch ····· Set to EV side.
ATF LOCK ····· Set to OFF side.
Other switches are not used when adjusting EV-S900.

7-4-2. Preparation for Adjustment

1) Perform cleaning of the tape running surface (the individual tape guides, drum, capstan shaft and pinch roller).
2) Connection of oscilloscope
   1ch: CH2 checking pin of track shift & monitor jig
   External trigger: RF SWP checking pin of track shift & monitor jig
3) Set the SEL switch of the track shift & monitor jig to OFF, then play back the alignment tape (WR5-7NE) for tracking, and confirm that the RF waveform of both the entrance and exit sides become flat (Fig. 7-64. ⓐ).
   If the RF waveform of both sides is not flat, the adjustment should be carried out as described below.
   - In case the RF waveform on the entrance side is not flat (Fig. 7-64. ⓑ)
     ····· Perform the adjustment according to 7-4-3. Entrance Side Adjustment.
   - In case the RF waveform on the exit side is not flat (Fig. 7-64. ⓒ)
     ····· Perform the adjustment according to 7-4-4. Exit Side Adjustment.

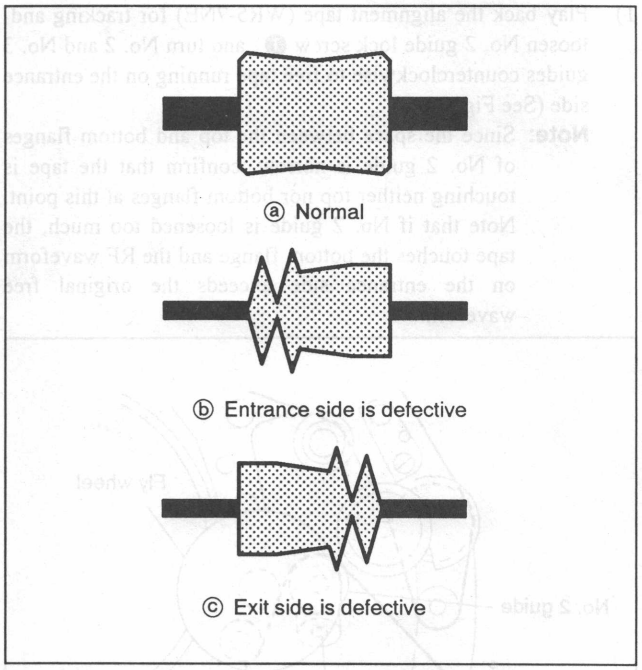

Fig. 7-64.

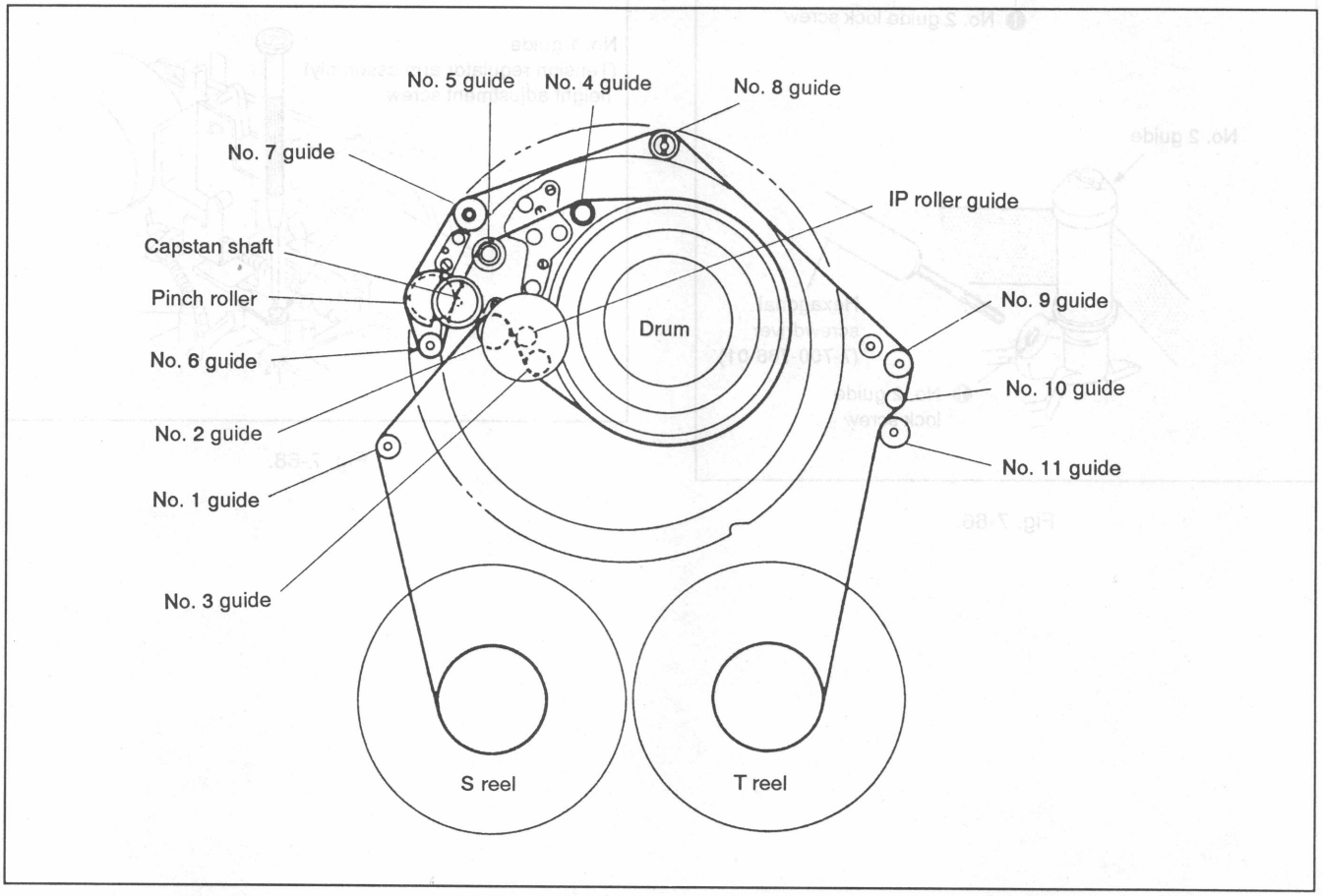

Fig. 7-65. Tape guide arrangement diagram

7-4-3. Entrance Side Adjustment

1) Play back the alignment tape (WR5-7NE) for tracking and loosen No. 2 guide lock screw ❶, and turn No. 2 and No. 3 guides counterclockwise to free tape running on the entrance side (See Fig. 7-66.)

Note: Since the space between the top and bottom flanges of No. 2 guide is narrow, confirm that the tape is touching neither top nor bottom flanges at this point. Note that if No. 2 guide is loosened too much, the tape touches the bottom flange and the RF waveform on the entrance side exceeds the original free waveform.

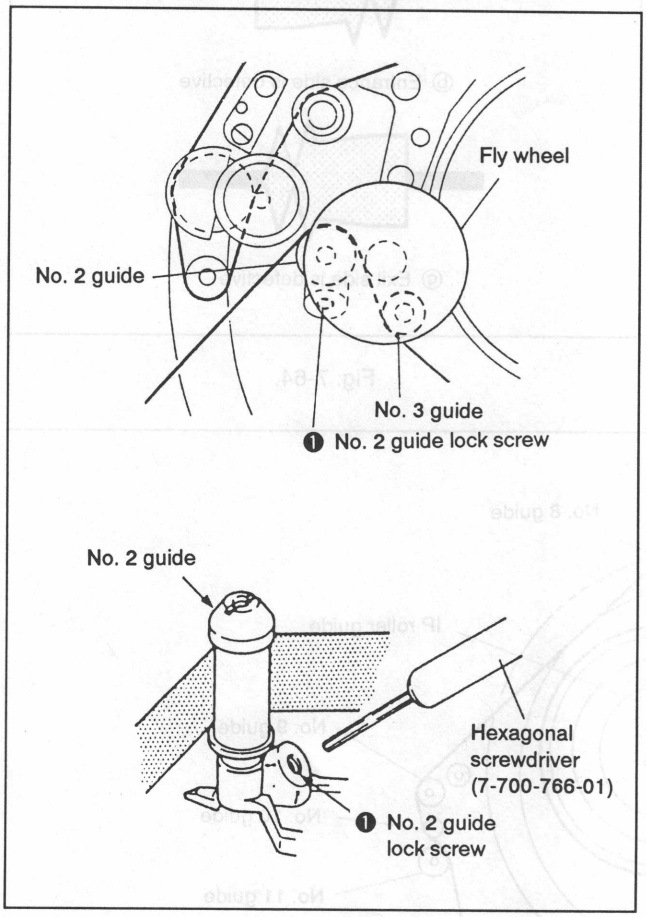

Fig. 7-66.

2) Confirm that the RF waveform on the entrance side has 1 to 4 peaks in this condition. If not, adjust as follows. (See Fig. 7-67.)

<less than 1 peak>

Adjust the No. 1 guide (tension regulator arm assembly) height adjustment screw by turning it clockwise 90 ° at a time. (See Fig. 7-68.)

<more than 4 peaks>

Adjust the height adjustment screw of No. 1 guide (tension regulator arm assembly) by turning it counterclockwise 90 ° at a time. (See Fig. 7-68.)

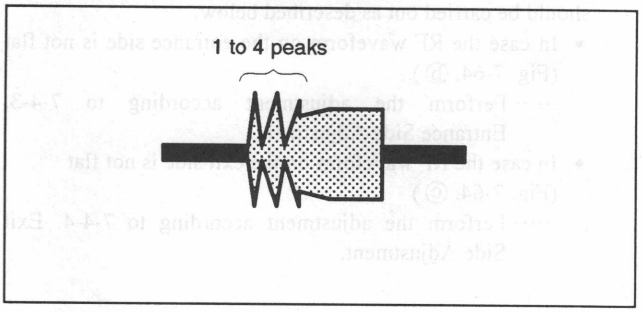

Fig. 7-67.

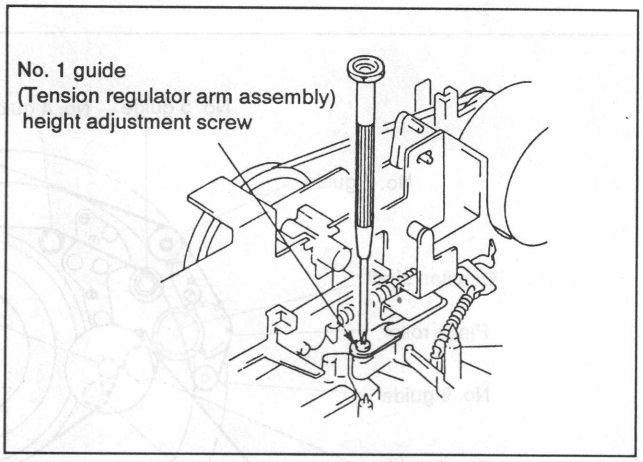

Fig. 7-68.

3) Remove the fly wheel according to 7-3-1. 1. Removal.
4) Slowly turn the No. 2 guide clockwise to make the entrance side waveform approximately flat. (Fig. 7-69.)
Note: Do not turn No. 2 guide excessively.
5) Set the SEL switch of the track shift & monitor jig to ON, then turn the track shift knob until the RF waveform amplitude becomes 2/3. (See Fig. 7-70.)
6) Raise the entrance side waveform slightly by turning No. 2 guide. (See Fig. 7-71.)
7) Flatten the waveform with No. 3 guide. (See Fig. 7-72.)
8) Tighten No. 2 guide lock screw ❶. (See Fig. 7-66.)
9) Mount the fly wheel according to 7-3-1. 2. Mounting. (See Fig. 7-6.)

Note: After adjustment is completed, be sure to perform checking in accordance with 7-4-5. Checking After Adjustment.

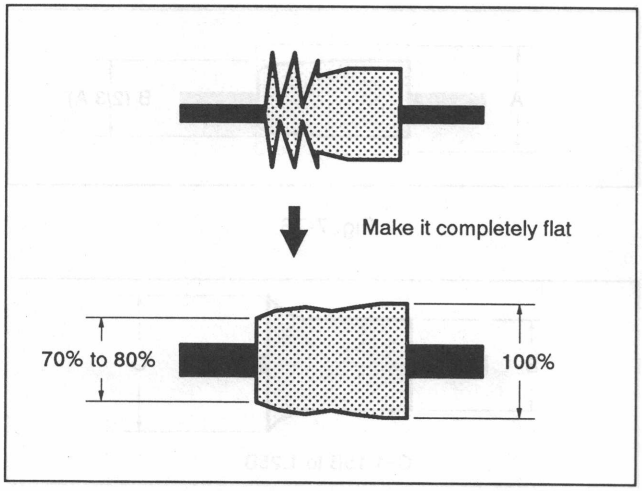

Fig. 7-69.

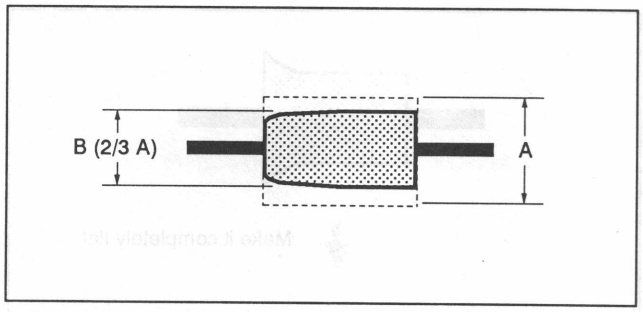

Fig. 7-70.

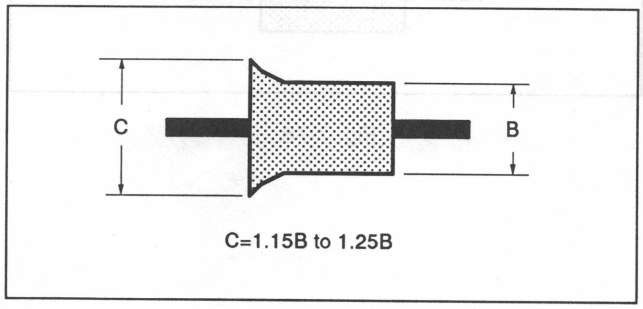

Fig. 7-71.

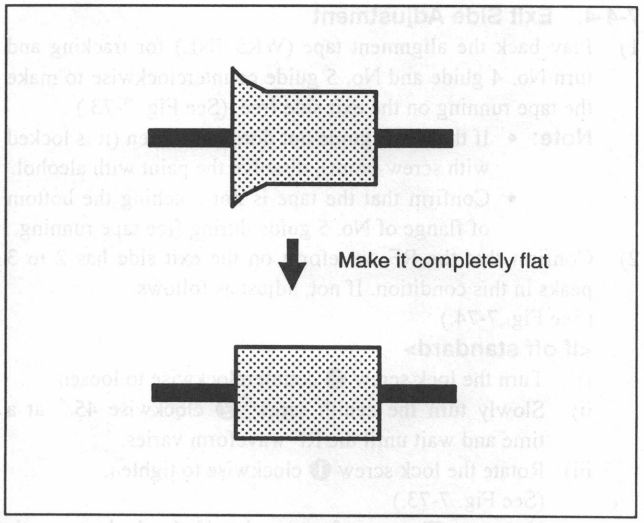

Fig. 7-72.

7-4-4. Exit Side Adjustment

1) Play back the alignment tape (WR5-7NE) for tracking and turn No. 4 guide and No. 5 guide counterclockwise to make the tape running on the exit side free. (See Fig. 7-73.)
   Note: • If the No. 5 guide nut does not loosen (it is locked with screw-paint), dissolve the paint with alcohol.
   • Confirm that the tape is not touching the bottom of flange of No. 5 guide during free tape running.
2) Confirm that the RF waveform on the exit side has 2 to 3 peaks in this condition. If not, adjust as follows. (See Fig. 7-74.)
   <If off standard>
   i) Turn the lock screw ❶ counterclockwise to loosen.
   ii) Slowly turn the zenith screw ❷ clockwise 45 ° at a time and wait until the RF waveform varies.
   iii) Rotate the lock screw ❶ clockwise to tighten. (See Fig. 7-73.)
   Note: • The waveform varies if the lock screw is tightened too strongly. Tighten moderately.
   • Never turn the azimuth screw of No. 5 guide.
3) Turn the No. 5 guide clockwise to make the RF waveform on the exit side approximately flat. (Fig. 7-75.)
   Note: The waveform reaction is slow against nut rotation. Turn the nut after the waveform variations are stabilized.
4) Set the SEL switch of the track shift & monitor jig to ON, then turn the track shift knob until the RF waveform amplitude becomes 2/3. (See Fig. 7-76.)
5) Raise the exit side waveform slightly by turning No. 5 guide. (See Fig. 7-77.)
6) Turn No. 4 guide so that waveform is flat. (See Fig. 7-78.)

Note: After adjustment is completed, be sure to perform checking in accordance with 7-4-5. Checking After Adjustment.

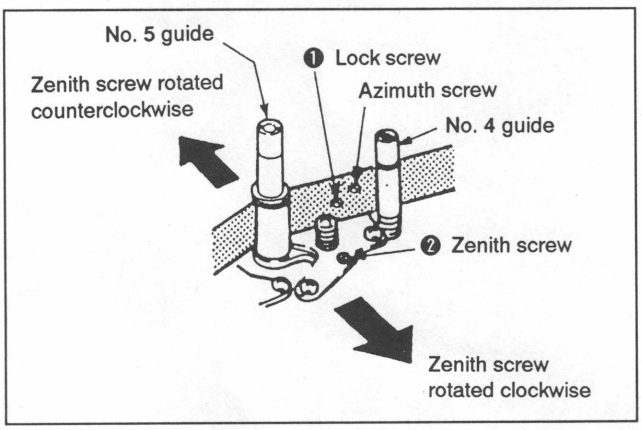

Fig. 7-73.

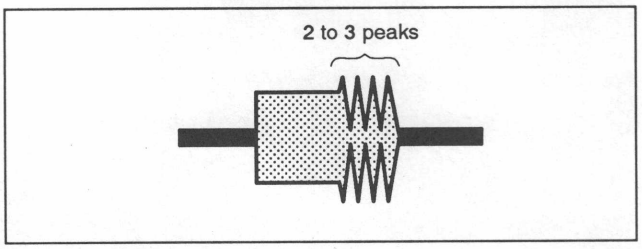

Fig. 7-74.

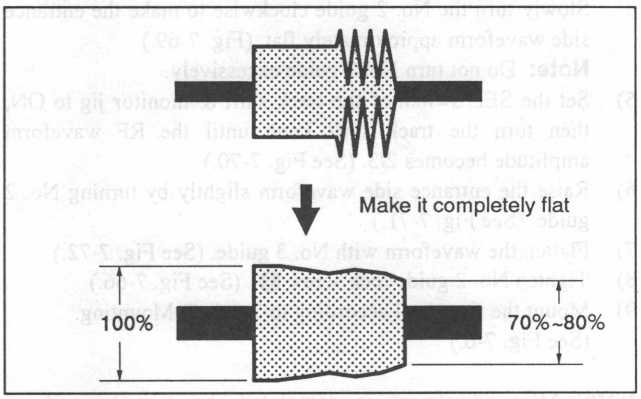

Fig. 7-75.

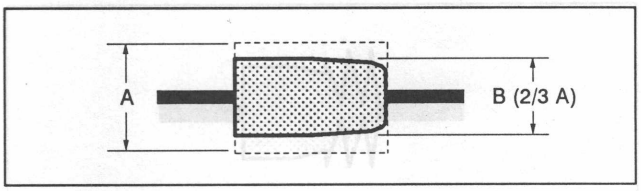

Fig. 7-76.

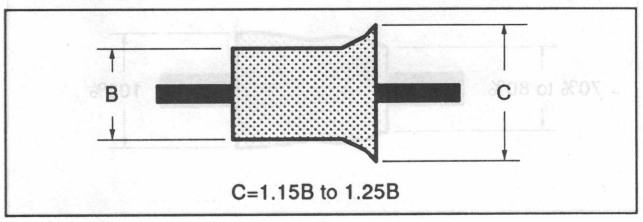

Fig. 7-77.

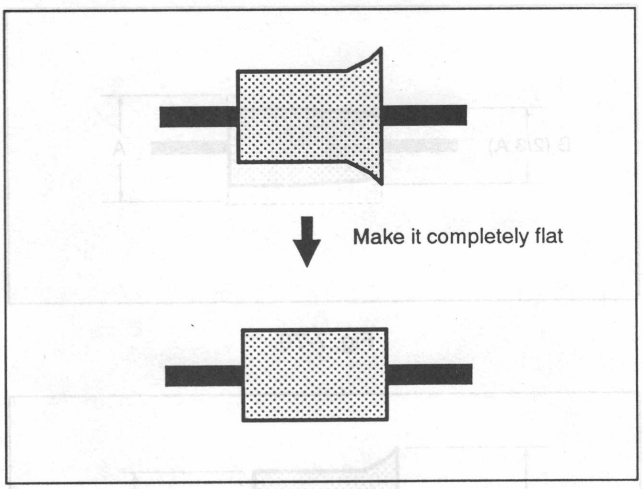

Fig. 7-78.

7-4-5. Checking After Adjustment

1. Tracking check

1) Play back the alignment tape (WR5-7NE) for tracking.
2) Set the SEL switch of the track shift & monitor jig to ON, and turn the track shift knob until the RF waveform amplitude becomes 2/3. (See Fig. 7-79.)
3) Confirm that the RF waveform amplitude minimum value (EMIN) at this time is more than 75% of maximum value (EMAX). (See Fig. 7-80.)
4) Confirm that the fluctuation amount of both RF waveform entrance and exit sides are as shown in Fig. 7-81.
5) Set the SEL switch of the track shift & monitor jig to OFF.
6) Set to the REV mode and confirm that the waveform noise pitches are uniform. (See Fig. 7-82.) If not, adjust as follows.

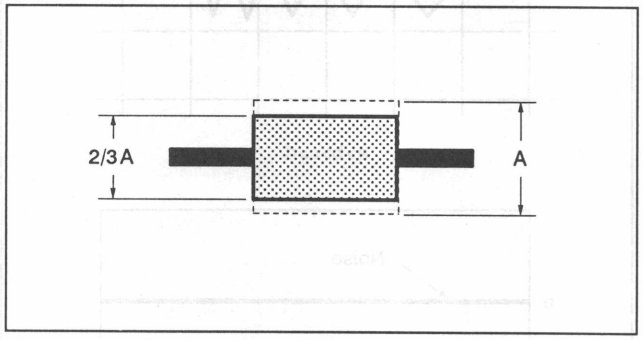

Fig. 7-79.

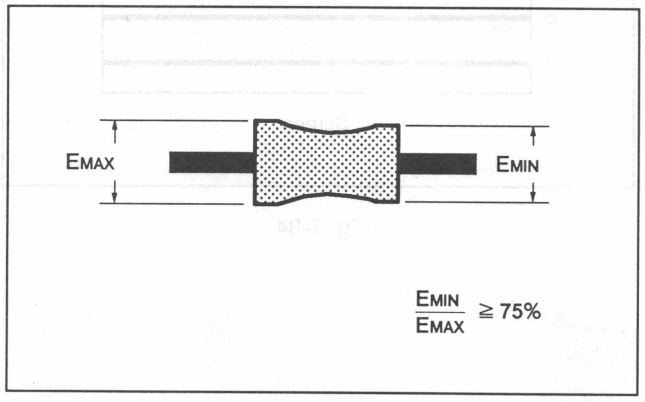

Fig. 7-80.

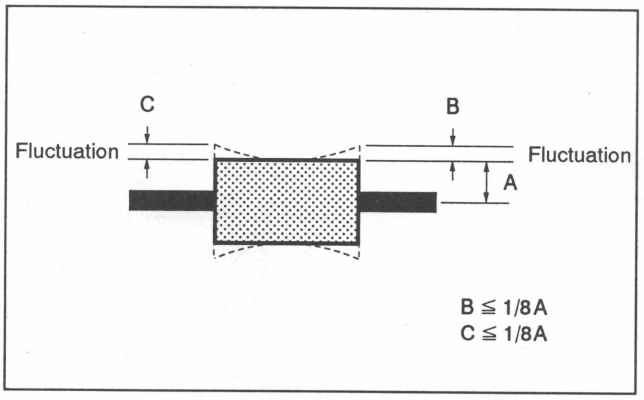

Fig. 7-81.

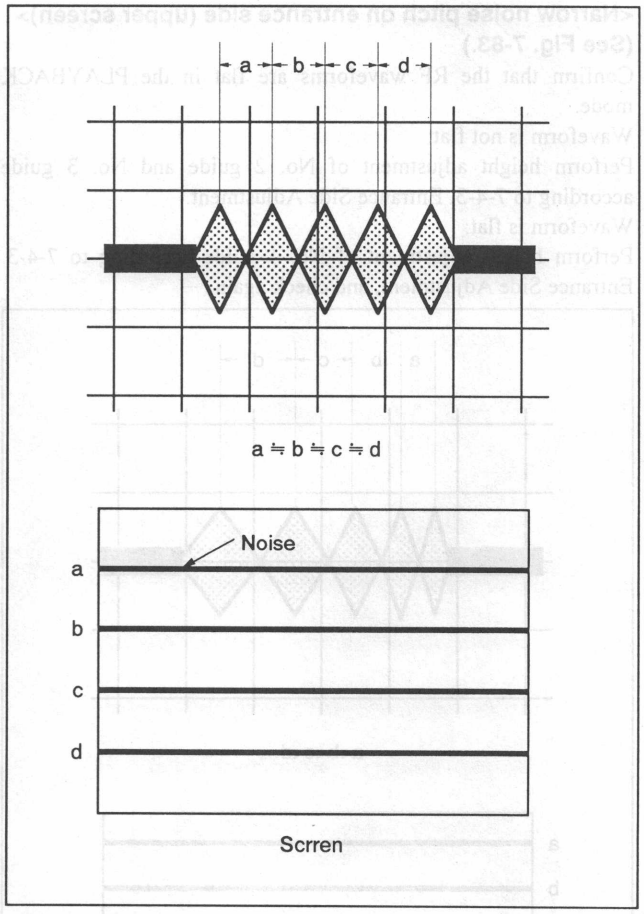

Fig. 7-82.

<Narrow noise pitch on entrance side (upper screen)>
(See Fig. 7-83.)

Confirm that the RF waveforms are flat in the PLAYBACK mode.

Waveform is not flat:

Perform height adjustment of No. 2 guide and No. 3 guide according to 7-4-3. Entrance Side Adjustment.

Waveform is flat:

Perform height adjustment of No. 1 guide according to 7-4-3. Entrance Side Adjustment, and check again.

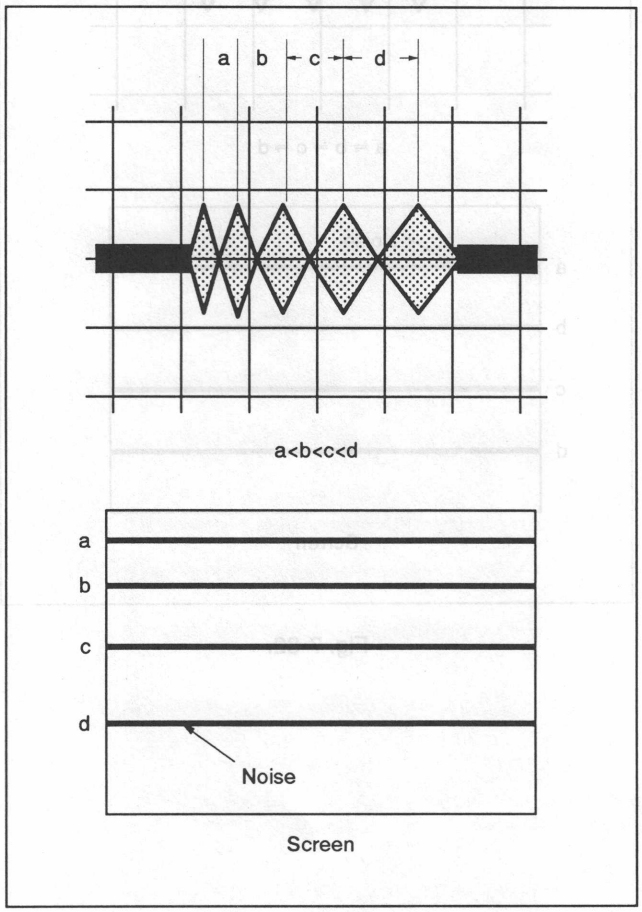

Fig. 7-83.

<Narrow noise pitch on exit side (lower screen)>
(See Fig. 7-84.)

Set to the PLAYBACK mode and perform height adjustment of No. 4 guide and No. 5 guide according to 7-4-4. Exit Side Adjustment.

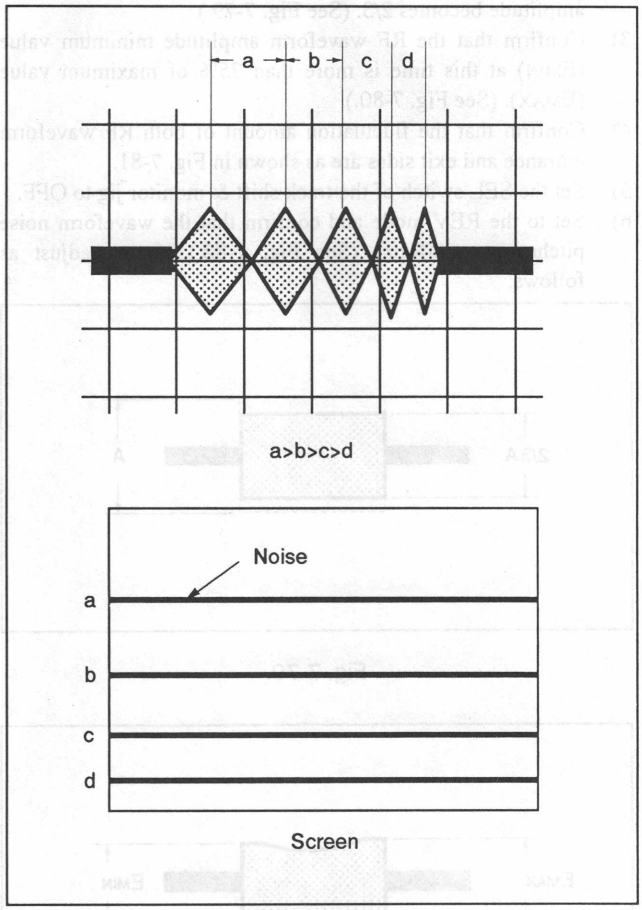

Fig. 7-84.

<Wide noise pitch on exit side (lower screen)>
(See Fig. 7-85.)

Set to the PLAYBACK mode and confirm that the RF waveform is flat.

Waveform is not flat:

Perform height adjustment of No. 4 guide and No. 5 guide according to 7-4-4. Exit Side Adjustment.

Waveform is flat:

Turn the guide lower gear counterclockwise with No. 6 guide lock jig (Ref. No. J-10) to loosen, and turn No. 6 guide counterclockwise 45 ° to tighten the lower gear. Check the RF waveform of the REV mode. (See Fig. 7-86.)

Note: If No. 6 guide is raised too much at this time, wrinkles may occur in section Ⓐ between the capstan shaft and No. 5 guide. Confirm that no wrinkles are occurring. (See Fig. 7-87.)

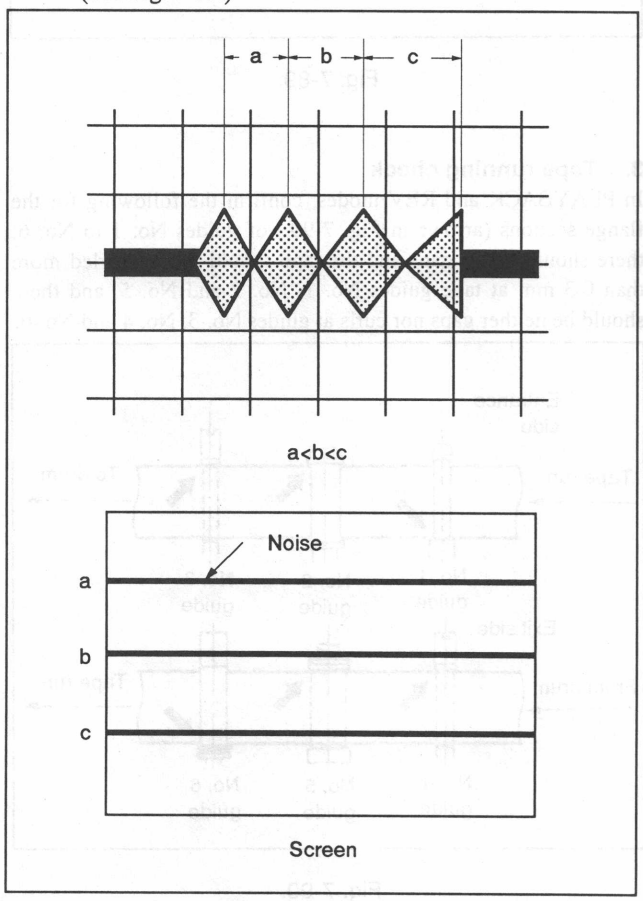

Fig. 7-85.

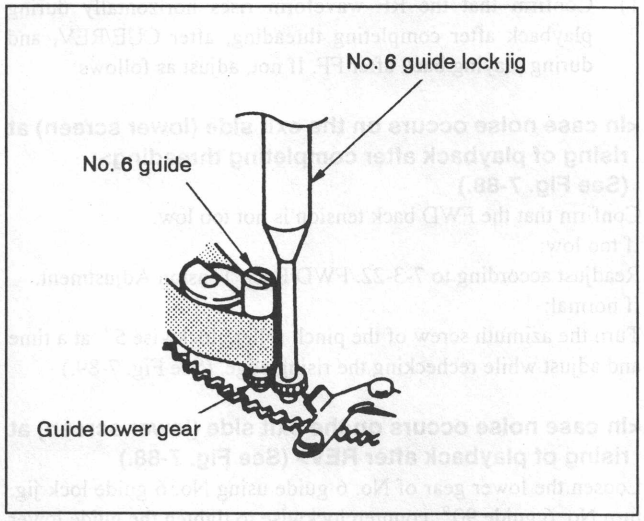

Fig. 7-86.

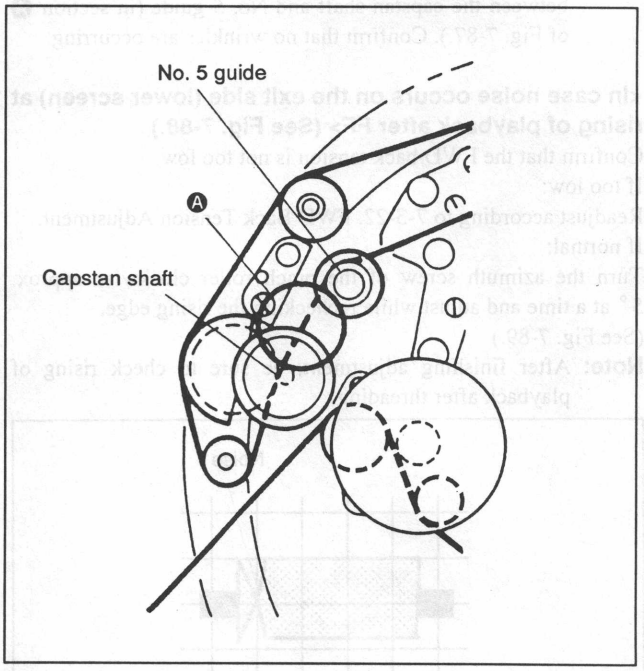

Fig. 7-87.

2. Checking of rising edge

1) Confirm that the RF waveform rises horizontally during playback after completing threading, after CUE/REV, and during playing back after FF. If not, adjust as follows.

<In case noise occurs on the exit side (lower screen) at rising of playback after completing threading> (See Fig. 7-88.)

Confirm that the FWD back tension is not too low.
If too low:
Readjust according to 7-3-22. FWD Back Tension Adjustment.
If normal:
Turn the azimuth screw of the pinch roller clockwise 5° at a time and adjust while rechecking the rising edge. (See Fig. 7-89.)

<In case noise occurs on the exit side (lower screen) at rising of playback after REV> (See Fig. 7-88.)

Loosen the lower gear of No. 6 guide using No. 6 guide lock jig, turn No. 6 guide 90° counterclockwise to tighten the guide lower gear, then recheck the rising edge.

Note: If No. 6 guide is raised too much, wrinkles may occur between the capstan shaft and No. 5 guide (in section Ⓐ of Fig. 7-87.). Confirm that no wrinkles are occurring.

<In case noise occurs on the exit side (lower screen) at rising of playback after FF> (See Fig. 7-88.)

Confirm that the FWD back tension is not too low.
If too low:
Readjust according to 7-3-22. FWD Back Tension Adjustment.
If normal:
Turn the azimuth screw of the pinch roller clockwise approx. 5° at a time and adjust while rechecking the rising edge.
(See Fig. 7-89.)

Note: After finishing adjustment, be sure to check rising of playback after threading.

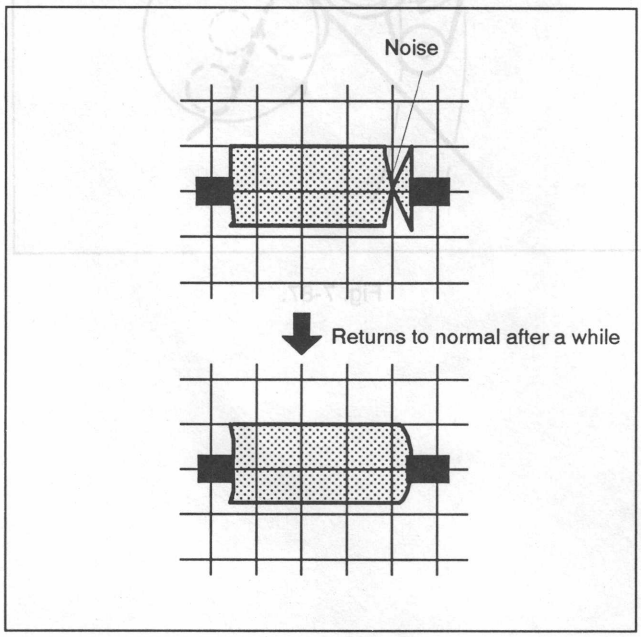

Fig. 7-88.

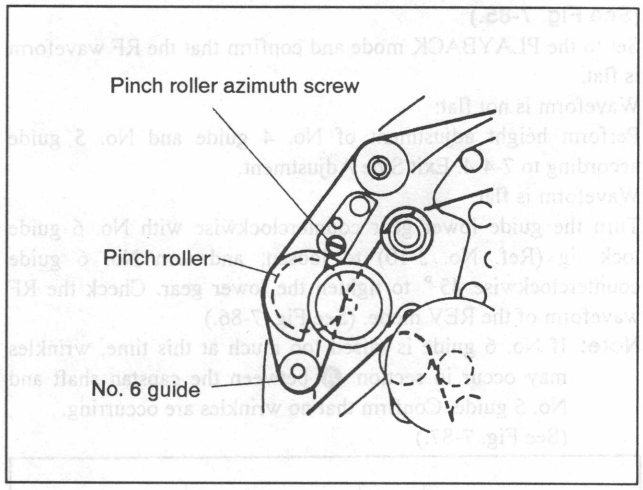

Fig. 7-89.

3. Tape running check

In PLAYBACK and REV modes, confirm the following for the flange sections (arrows in Fig. 7-90.) of guides No. 1 to No. 6: there should be no gaps and the tape should not be curled more than 0.3 mm at tape guides No. 1, No. 2 and No. 5, and there should be neither gaps nor curls at guides No. 3, No. 4 and No. 6.

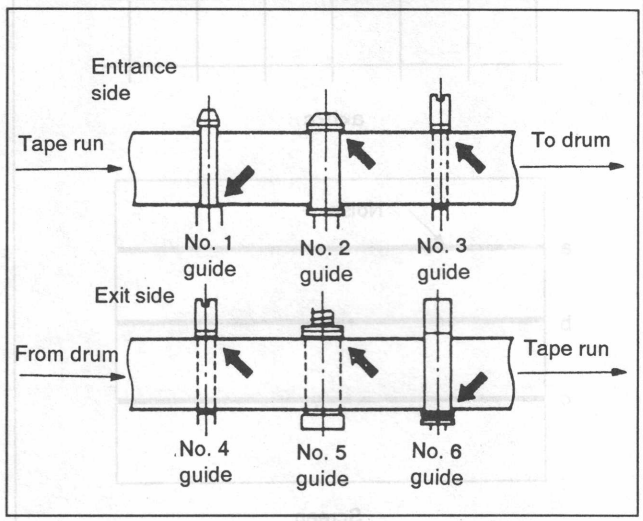

Fig. 7-90.

SECTION 8
ELECTRICAL ADJUSTMENTS

During adjustment, refer to the relevant parts arrangement diagrams beginning on page 338.

The following measuring equipment is used for electrical adjustments.

[Equipment to be used]

1) Monitor TV
2) Dual trace oscilloscope having band of over 10 MHz, incorporating delay mode. (Use 10:1 probe unless otherwise specified)
3) Frequency counter
4) Pattern generator
   (Equipped with video output terminal: refer to 8-1-1. Connection of Equipment)
5) Digital voltmeter
6) Audio generator
7) Audio level meter
8) Audio distortion meter
9) Audio attenuator
10) Audio multiplex signal generator
11) Alignment tapes
    Tracking adjustment (WR5-1NP)
    Parts Code: 8-967-995-02
    Video frequency response adjustment (WR5-7NE)
    Parts Code: 8-967-995-13
    Normal mode operation checking
    For SP (WR5-5NSP) Parts Code: 8-967-995-42
    or (WR5-4NSP) Parts Code: 8-967-995-41
    For LP (WR5-4NL) Parts Code: 8-967-995-51
    Hi8 mode operation checking (ME Tape)
    For SP (WR5-8NSE) Parts Code: 8-967-995-43
    For LP (WR5-8NLE) Parts Code: 8-967-995-52

8-1. PREPARATIONS

8-1-1. Connection of Equipment

Adjustment is performed by connection of the measuring equipment shown in Fig. 8-1., according to the input terminal indications (S VIDEO or VIDEO). The input terminal is indicated by ( ) in the signal column. Either input terminal can be used when there is no indication. The S VIDEO IN terminal has priority. When adjusting using the VIDEO IN terminal input, remove the connector from the S VIDEO IN terminal.

Notes: 1) If adjustment is performed by VIDEO input when S VIDEO input is indicated, the product specifications for this unit may not be satisfied. Be sure to follow the indications.
2) When performing adjustment using a VCR equipped with an S video output terminal as the signal source, the performance of this unit may be affected by that VCR. Try to use a pattern generator with a Y/C separation output terminal if possible.

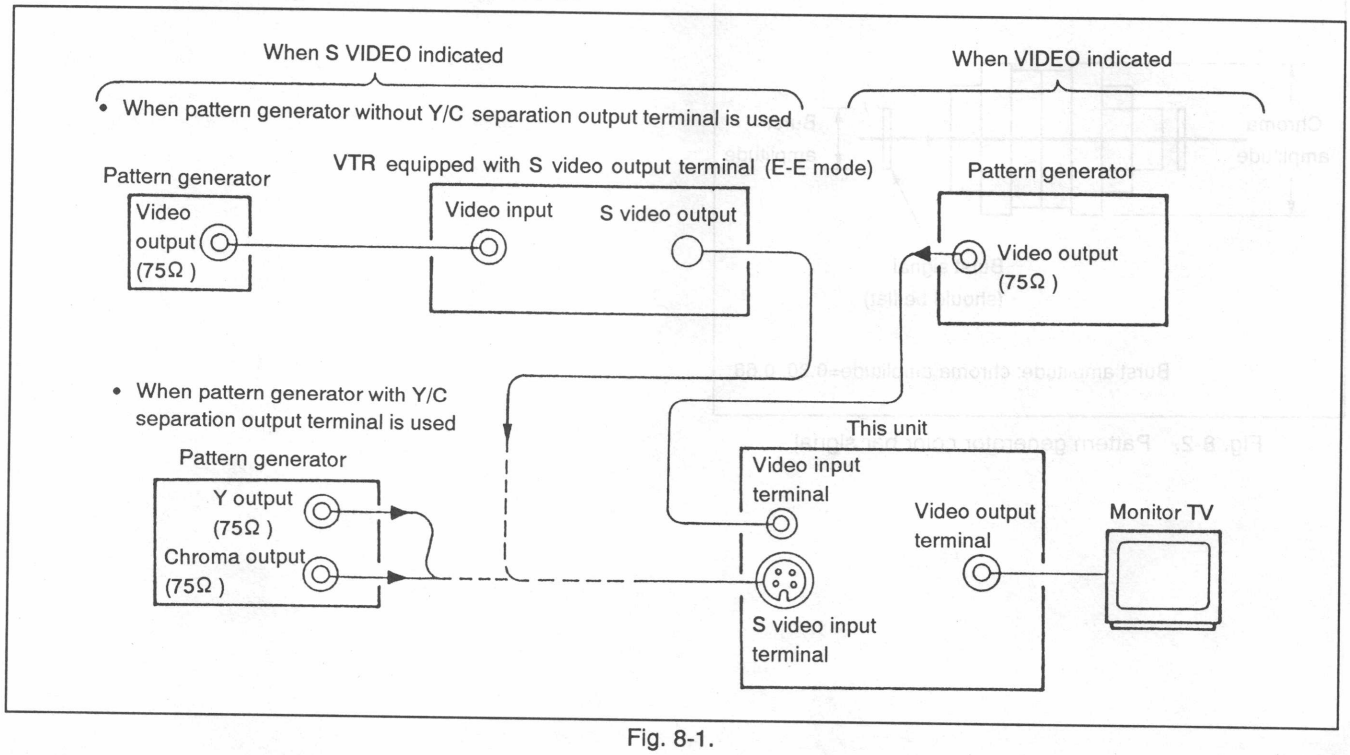

Fig. 8-1.

8-1-2. Confirmation of Input Signal

As adjustment is made using a video signal obtained from a pattern generator as the adjustment signal, it is necessary to confirm that the video output signal is within the required specifications.

1. S VIDEO input

Connect an oscilloscope to the Y signal terminal of the S video input terminal (CNJ701 on IO-17 board) and confirm that the sync signal of the Y signal is approximately 0.3 Vp-p and the amplitude of the video section is approximately 0.7 Vp-p. (When using a VCR equipped with an S video output terminal, confirm that there is no residual chroma signal or burst signal.) Next, connect the oscilloscope to the chroma signal terminal of the S video input terminals and confirm that the burst signal amplitude of the chroma signal is approximately 0.3 Vp-p and flat, and that the amplitude ratio of the burst signal to the chroma signal is 0.30:0.66. The Y and chroma signals used for adjustment are shown in Fig. 8-2.

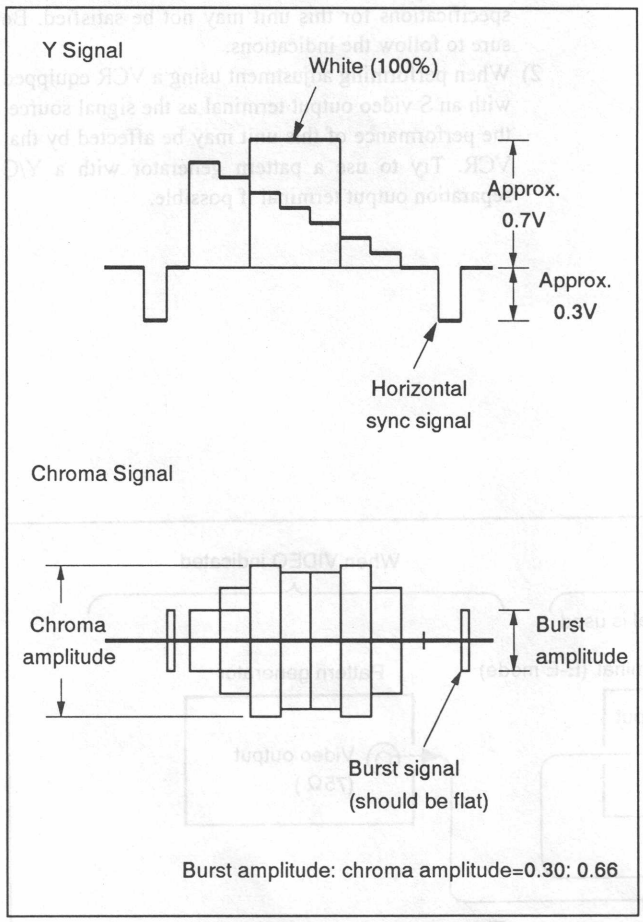

Fig. 8-2. Pattern generator color bar signal

2. VIDEO input

Connect an oscilloscope to the video input terminal (CNJ701 on IO-17 board) and confirm that the amplitude of the sync signal of the video signal is approximately 0.3V and the amplitude of the video section is approximately 0.7V. Confirm that the burst signal amplitude is approximately 0.3V and flat, and that the level ratio of the burst signal and red signal is 0.30:0.66.

The video signal (color bars) used for adjustment are shown in Fig. 8-3.

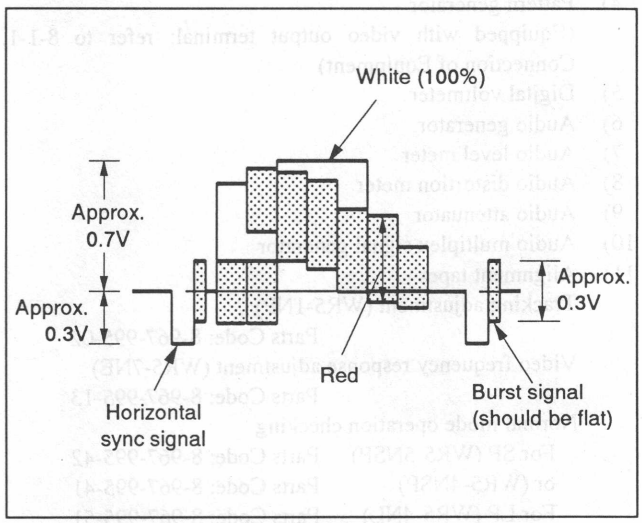

Fig. 8-3. Pattern generator color bar signal

[Alignment tapes]

The alignment tapes shown in the table below are available. Use the tape indicated in the signal column of each adjustment section.

When a specific name is not given for use of an operation checking tape, any of the operation checking tapes can be used.

Name	Recording Mode	Tape Type	Tape Speed	Contents		Use
				Video Area	PCM Area	
Tracking WR5-1NP	STD	MP	SP	CH2: Signal for 1 MHz tape path adjustment Marker (CH1: 9 MHz) for switching position adjustment		Tape path adjustment Switching position adjustment
Video frequency response WR5-7NE	Hi8	ME	SP	RF sweep 0 to 15 MHz Markers 2, 4.5, 7, 8.5, 10 MHz		Frequency response adjustment
Operation checking WR5-4NSP or WR5-5NSP	STD	MP	SP	• Video signals Color bars 4 minutes Monoscope 4 minutes • Audio signal (AFM) 400 Hz, 60% modulation	• Audio signals (PCM) Monoscope section 20 Hz 20 seconds 400 Hz 20 seconds 14 kHz 20 seconds } Repeated four times Color bar section 1 kHz 4 minutes	Operation checking
WR5-8NSE	Hi8	ME	SP			
WR5-4NL	STD	MP	LP	• Video signals Color bars 4 minutes Monoscope 4 minutes • Audio signal (AFM) 400 Hz, 60% modulation		
WR5-8NLE	Hi8	ME	LP			

Note: Recording modes
STD ·····Conventional mode
Hi8 ·····High band mode

Tape Types
MP ·····Metal particle tape
ME·····Metal evaporated tape

The 75% color bar signal recorded on the alignment tape is shown in Fig. 8-4.

Note: Measured at VIDEO OUT terminal (terminated at 75Ω)

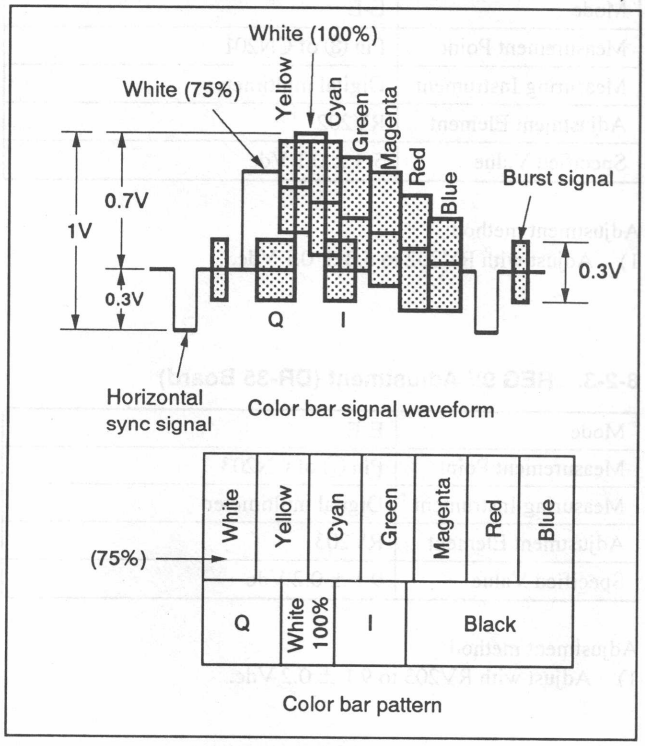

Fig. 8-4. Color bar signal on alignment tape

[I/O level and impedance]

Video input Pin jack
Input signal: 1 Vp-p, 75Ω unbalanced, negative SYNC

Video output Pin jack
Output signal: 1 Vp-p, 75Ω unbalanced, negative SYNC

S video input (4-pin mini DIN)
Luminance signal: 1 Vp-p, 75Ω unbalanced, negative SYNC
Color signal: 0.286 Vp-p, 75Ω , unbalanced

S video output (4-pin mini DIN)
Luminance signal: 1 Vp-p, 75Ω unbalanced, negative SYNC
Color signal: 0.286 Vp-p, 75Ω , unbalanced

Audio input Pin jack
Input level: –7.5 dBs (0 dBs=0.775 Vrms)

Audio output Pin jack
Rated output: –7.5 dBs (with 47 kΩ load)
Output impedance: Less than 2.2 kΩ

[Adjustment order]

Perform adjustment in the following order.

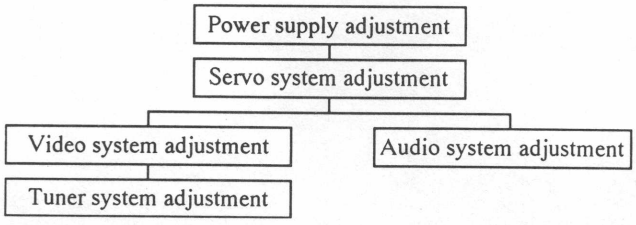

8-1-3. Recording Mode Selection (Hi8 mode/Normal mode)

The recording mode (Hi8 mode/Normal mode) of this unit is selected as shown in the table below. The playback mode (Hi8 mode/Normal mode) is automatically selected according to the mode in which the tape was recorded.

High Band (STD mode/Hi8 mode select switch) (SW062 on FT-37 board)	S Video Input Terminal (CNJ701 on IO-17 board)	Tape Used	Recording Mode
Auto (Hi8 mode)	Not relevant	Hi8 ME	Hi8
		Hi8 MP	
		MP	STD
	Connector inserted	Hi8 ME	Hi8
		Hi8 MP	
		MP	STD
	Nothing inserted	Hi8 ME	STD
		Hi8 MP	
		MP	
Off (STD mode)	Not relevant	Hi8 ME	STD
		Hi8 MP	
		MP	

8-2. POWER SUPPLY BLOCK ADJUSTMENT

8-2-1. Oscillation Frequency Adjustment (DR-35 Board)

Mode	E-E
Measurement Point	Collector of Q201
Measuring Instrument	Frequency counter
Adjustment Element	RV201
Specified Value	91 ± 2 kHz

Adjustment method:

1) Adjust with RV201 to 91 ± 2 kHz.

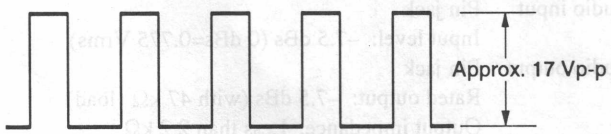

Fig. 8-5.

8-2-2. REG 5V Adjustment (DR-35 Board)

Mode	E-E
Measurement Point	Pin ③ of CN201
Measuring Instrument	Digital multimeter
Adjustment Element	RV202
Specified Value	5.3 ± 0.1 Vdc

Adjustment method:

1) Adjust with RV202 to 5.3 ± 0.1 Vdc.

8-2-3. REG 9V Adjustment (DR-35 Board)

Mode	E-E
Measurement Point	Pin ① of CN203
Measuring Instrument	Digital multimeter
Adjustment Element	RV203
Specified Value	9.1 ± 0.2 Vdc

Adjustment method:

1) Adjust with RV203 to 9.1 ± 0.2 Vdc.

8-2-4. Voltage Check (DR-35 and DT-63 Boards)

Mode	E-E
Measuring Instrument	Digital multimeter
UNSW 5V Check	
Measurement Point	Pin ② of CN203 on DR-35 board
Specified Value	5.4 ± 0.1 Vdc
DRIVE 9V Check	
Measurement Point	Pin ④ of CN202 on DR-35 board
Specified Value	9.1 ± 0.2 Vdc
UNSW 38V Check	
Measurement Point	Pin ② of CN104 on DT-63 board
Specified Value	36.5 ± 0.8 Vdc
UNSW –30V Check	
Measurement Point	Pin ④ of CN104 on DT-63 board
Specified Value	–29 ± 0.8 Vdc
UNSW 9V Check	
Measurement Point	Pin ① of CN105 on DT-63 board
Specified Value	8.8 ± 0.2 Vdc
UNSW –9V Check	
Measurement Point	Pin ③ of CN305 on DT-63 board
Specified Value	–8.8 ± 0.2 Vdc
BACK UP 5V Check	
Measurement Point	Pin ⑦ of CN106 on DT-63 board
Specified Value	5.7 ± 0.8 Vdc

Checking method:

1) Confirm that each voltage is at the specified level.

8-3. SYSTEM CONTROL SYSTEM ADJUSTMENT

8-3-1. Timer Clock Adjustment (FT-37 Board)

Mode	E-E
Signal	Arbitrary
Measurement Point	Pin ⑥⓪ of IC002
Measuring Instrument	Frequency counter
Adjustment Element	CV001
Specified Value	1048.58 ± 0.01 kHz

Note: Perform adjustment after connecting Pin ⑤⑥ and Pin ⑤⑨ of IC002 to GND.

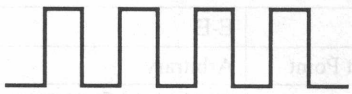

1048.58 ± 0.01 kHz

Fig. 8-6.

8-4. SERVO SYSTEM ADJUSTMENT

8-4-1. Reel Bias Adjustment (SP-7 Board)

Mode	Playback (LP mode)
Signal	Any tape
Measurement Point	TP210
Measuring Instrument	Frequency counter
Adjustment Element	RV209
Specified Value	21 ± 1 Hz

8-4-2. REC ATF Level Check (SP-7 Board)

Mode	E-E
Measurement Point	Arbitrary
Measuring Instrument	TP235 (Pin ⑤ of CN214: REC ATF)
Adjustment Element	Oscilloscope
Specified Value	500 ± 50 mVp-p

Checking method:

1) Confirm that the REC ATF level is 500 ± 50 mVp-p.

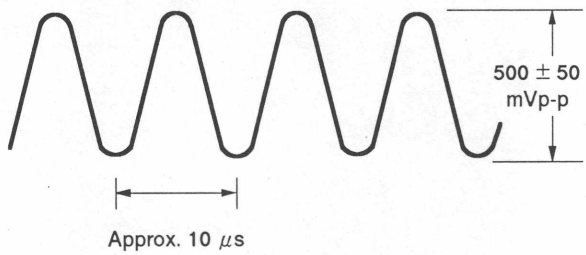

Fig. 8-7.

8-4-3. Drum Free Speed Adjustment (SP-7 Board)

Mode	Playback (SP mode)
Signal	Any tape
Measurement Point	TP213 (Pin ⑭ of IC212: ADE)
Measuring Instrument	Oscilloscope (DC range)
Adjustment Element	RV202
Specified Value	1.9 ± 0.1 Vdc

Adjustment method:

1) Adjust RV202 so that the center value of the DC voltage is 1.9 ± 0.1 Vdc.

8-4-4. Capstan Free Speed Adjustment (SP-7 Board)

The adjusting element for the LP mode is shown within [ ].

Mode	Playback
Signal	Any tape
Measurement Point	TP202 (Pin ⑬ of IC204: C FG)
Measuring Instrument	Frequency counter
Adjustment Element	RV206 [RV208]
Specified Value	960 ± 1 Hz [480 ± 1 Hz]

Connections:

1) Connect a capacitor (220 μF/10V) between TP203 (Emitter of Q704: PB ATF) and REG GND.

Adjustment method:

1) Use the SP/LP button to set to the SP [LP] mode.
2) Set to the play back mode.
3) Adjust with RV206 [RV208] to 960 ± 1 Hz [480 ± 1 Hz].

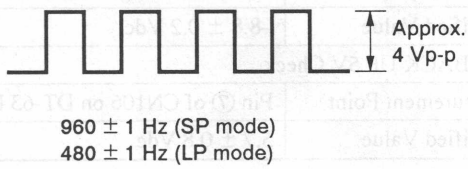

Fig. 8-8.

8-4-5. Switching Position Adjustment (SP-7 Board)

Mode	Playback
Signal	Alignment tape: tracking adjustment (WR5-1NP)
Measurement Point	CH1: Pin ④ (RF CH 2) of CN008 on PR-68 board CH2: TP207 (Pin ㉑ of IC204: SV RF)
Measuring Instrument	Oscilloscope
Adjustment Element	RV201
Specified Value	0 ± 10 μs

Adjustment method:

1) Adjust with RV201 so that the marker of the RF CH 2 waveform is lined up with the falling edge of the RF SWP waveform.

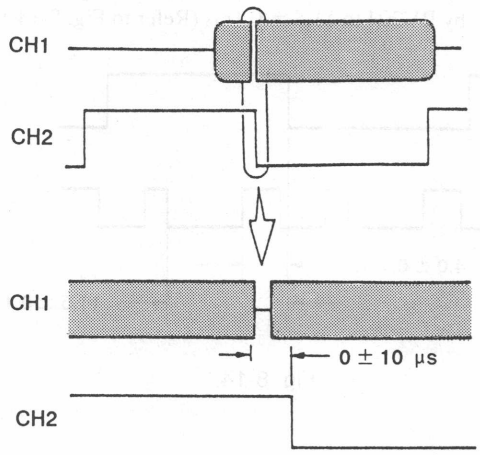

Fig. 8-9. Switching position adjustment

8-4-6. ATF BPF Balance Adjustment (SP-7 Board)

Mode	Playback
Signal	Refer to Fig. 8-10.
Measurement Point	TP236 (Pin ⑨ of IC703: ATF ER)
Measuring Instrument	Oscilloscope
Adjustment Element	RV701
Specified Value	Minimum level step in ATF error signal

Connection 1:

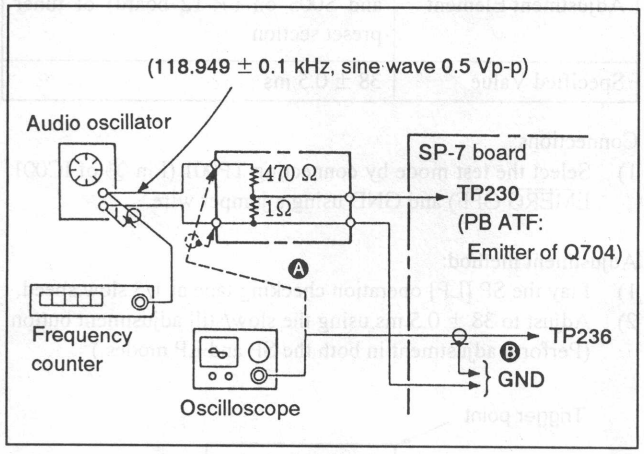

Fig. 8-10.

Connection 2:

1) Connect Pin ⑤ (P SEL1) of CN012 and Pin ① (REG 5V) of CN005 using a jumper wire.

Adjustment method:

1) Use an oscilloscope to confirm that the sine wave level output from t > audio oscillator is 0.5 Vp-p. (Fig. 8-10. Ⓐ)
2) Adjust the oscillation frequency of the audio oscillator until the frequency counter indicates 118.949 ± 0.1 kHz.
3) Play any tape.
4) Connect the oscilloscope to TP236. (Fig. 8-10. Ⓑ)
5) Adjust RV701 for the minimum level step in the ATF error signal.

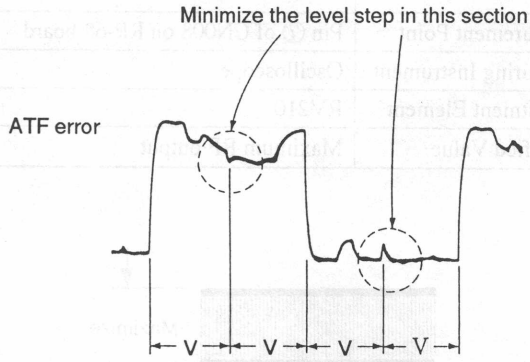

Fig. 8-11.

8-4-7. SLOW Tracking Adjustment (SP-7 Board)

The adjusting element for the LP mode is shown within [ ].

Mode	SLOW 1/5
Signal	SP [LP] operation checking tape
Measurement Point	TP232 (Pin ㉓ of IC208: C. ON)
Measuring Instrument	Oscilloscope • Trigger mode: NORMAL • Trigger slope: +
Adjustment Element	Slow/still adjustment buttons (S004 and S005 on PR-12 board) of tuner preset section
Specified Value	38 ± 0.5 ms

Connections:

1) Select the test mode by connecting TP001 (Pin ㊴ of IC001: $\overline{\text{EMERG OFF}}$) and GND using a jumper wire.

Adjustment method:

1) Play the SP [LP] operation checking tape at 1/5 slow speed.
2) Adjust to 38 ± 0.5 ms using the slow/still adjustment button. (Perform adjustment in both the SP and LP modes.)

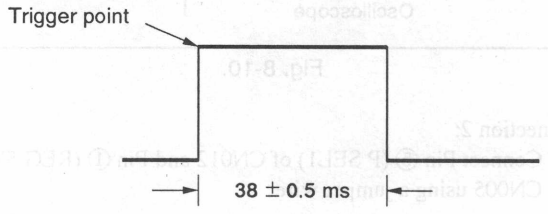

Fig. 8-12.

8-4-8. Tracking Adjustment (SP-7 Board)

Mode	Playback
Signal	Tape with no signal self-recorded in SP mode
Measurement Point	Pin ⑦ of CN008 on RP-68 board
Measuring Instrument	Oscilloscope
Adjustment Element	RV210
Specified Value	Maximum RF output

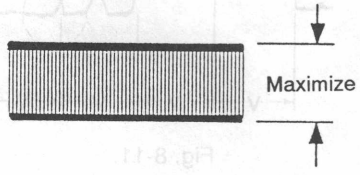

Fig. 8-13.

8-4-9. STILL Adjustment (SP-7 Board)

Mode	STILL (LP)
Signal	Tape self-recorded in LP mode
Measurement Point	CH1: TP207 (Pin ㉑ of IC204: SV RF) CH2: TP228 (Pin ⑧ of IC703: ST ID)
Measuring Instrument	Oscilloscope
Adjustment Element	RV203, RV204
Specified Value	1. 4.0 ± 0.1 ms (RV203) 2. 11.5 ± 0.1 ms (RV204)

Adjustment method:

1) Manually rotate the rotor of the capstan motor, and stop at the position where the noise on the monitor screen is hidden at the top or bottom of the screen.
2) Adjust by RV203 to 4.0 ± 0.1ms. (Refer to Fig. 8-14.)
3) Adjust by RV204 to 11.5 ± 0.1ms (Refer to Fig. 8-14.)

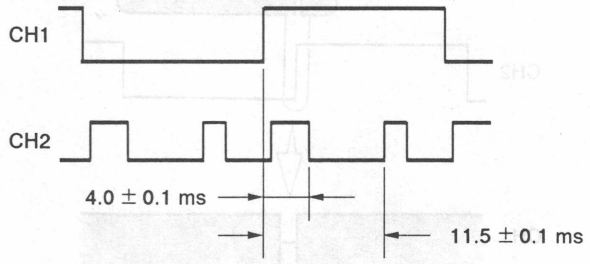

Fig. 8-14.

8-4-10. FORWARD SLOW Adjustment (SP-7 Board)

The adjusting element for the LP mode is shown within [ ].

Mode	FORWARD SLOW
Signal	Tape self-recorded in SP [LP] mode
Measurement Point	Confirm on monitor TV screen
Measuring Instrument	
Adjustment Element	RV205 [RV207]
Specified Value	No noise or skew on monitor TV screen

Adjustment method:

1) Adjust with RV205 [RV207] so that the noise on the monitor screen is hidden on the top or bottom of the screen.

8-4-11. SLOW fH Adjustment (SP-7 Board)

1. fH Bias Adjustment

The adjusting element for the LP mode is shown within [ ].

Mode	E-E
Signal	No signal
Measurement Point	Pin ⑦ of IC219: FH BIAS
Measuring Instrument	Digital multimeter
Adjustment Element	RV216 [RV215]
Specified Value	2.0 ± 0.1 Vdc

Adjustment method:

1) Set to the SP [LP] mode using the SP/LP button.
2) Adjust to 2.0 ± 0.1 Vdc using RV216 [RV215].

2. SLOW fH Adjustment

The adjusting element for the LP mode is shown within [ ].

Mode	FORWARD SLOW
Signal	Tape self-recorded in SP [LP] mode
Measurement Point	Pin ⑤ of CN216: FH
Measuring Instrument	Oscilloscope
Adjustment Element	RV218, RV212 [RV217]
Specified Value	Minimum shift width of fH pulse

Connection:

1) Select the test mode by connecting TP101 ($\overline{\text{EMERG OFF}}$) and GND using a jumper wire.

Adjustment method:

1) Alternately adjust RV218 and RV212 so that the shift width of the fH pulse is as small as possible.
   [Adjust for minimum shift width of the fH pulse using RV217.]

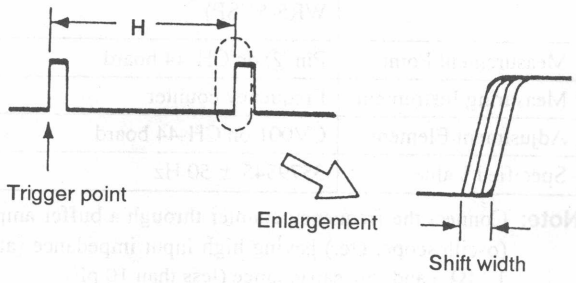

Fig. 8-15.

8-5. VIDEO ADJUSTMENT

As a rule, adjustment of the video system is made in the following order.
The color video signal supplied from the pattern generator is used as the video input signal for adjustment of the video system in the recording mode. Confirm that the sync signal and color burst signal satisfy the specifications designated in the adjustment setup shown in Fig. 8-3.

[Adjustment Method]

1) Playback Frequency Characteristics Adjustment
2) Flying Erase Check
3) X'tal Oscillator fo Adjustment
4) Y/C Separation Comb-type Filter Adjustment
5) Y Comb-type Filter Adjustment
6) SYNC AGC Adjustment
7) 31 AMP Gain Adjustment
8) VIDEO OUT Level Adjustment
9) PB Emphasis Adjustment
10) STD Mode PB Y Level Adjustment
11) Hi8 Mode PB Y Level Adjustment
12) STD Mode Y FM Carrier Frequency, Y FM Deviation Adjustment
13) Hi8 Mode Y FM Carrier Frequency, Y FM Deviation Adjustment
14) 378 fH VCO Adjustment
15) Chroma Emphasis fo Adjustment
16) Carrier Balance Adjustment
17) 1H Comb-type Filter Adjustment
18) 2H Comb-type Filter Adjustment
19) DC Offset Adjustment
20) C Comb-type Filter Cancel Adjustment
21) Ys Level Adjustment
22) REC Y Level Adjustment
23) REC C Level Adjustment
24) REC RF Level Adjustment
25) D.O.C. Level Adjustment
26) Direct Y Signal Level Adjustment
27) Direct C Signal Level Adjustment

8-5-1. Playback Frequency Characteristics Adjustment (RP-68 Board)

1. SP playback frequency characteristics adjustment

The adjusting element for CH2 mode is shown within [ ].

Mode	Playback
Signal	Alignment tape: Frequency characteristics adjustment (WR5-7NE)
Measurement Point	Pin ③ of CN008 [Pin ④ of CN008] External trigger: Pin ② (RF SWP) of CN008 Trigger slope: + [–]
Measuring Instrument	Oscilloscope
Adjustment Element	RV201 [RV202]
Specified Value	8.5 MHz level is 66% of 2 MHz level

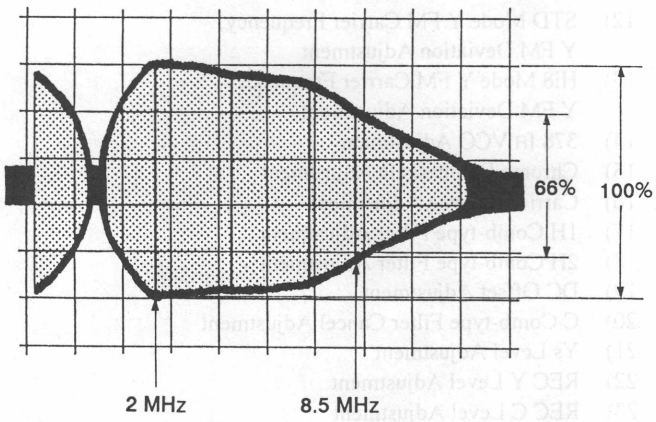

Fig. 5-16.

2. LP playback frequency characteristics adjustment

The adjusting element for CH2 mode is shown within [ ].

Mode	Playback
Signal	Alignment tape: Frequency characteristics adjustment (WR5-7NE)
Measurement Point	Pin ⑤ of CN008 [Pin ⑥ of CN008] External trigger: Pin ② (RF SWP) of CN008 Trigger slope: + [–]
Measuring Instrument	Oscilloscope
Adjustment Element	RV101 [RV102]
Specified Value	8.5 MHz level is 66% of 2 MHz level

8-5-2. Flying Erase Check (RP-68 Board)

Mode	REC
Signal	Arbitrary
Measurement Point	Pin ⑱ of CN001
Frequency Check	
Measuring Instrument	Frequency counter
SMeasuring	7.9 ± 0.5 MHz
Output Level Check	
Instrument	Oscilloscope
Specified Value	Approx. 8 Vp-p

Notes: 1) Use MP-type tape.
2) Connect the frequency counter through a buffer amplifier (oscilloscope, etc.) having high input impedance (at least 1 MΩ) and low capacitance (less than 10 pF).

Adjustment method:

1) Confirm the frequency and output level are 7.9 ± 0.5 MHz and approximately 8.0 Vp-p respectively.

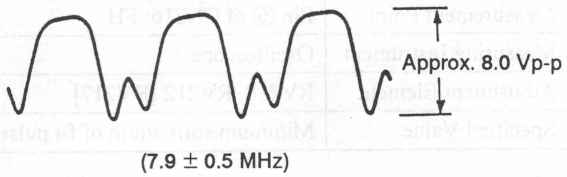

Fig. 8-17.

8-5-3. X'tal Oscillator fo Adjustment (CH-44/VI-57 Board)

Mode	Playback
Signal	Alignment tape: operation checking (WR5-4NSP or WR5-5NSP)
Measurement Point	Pin ② on CH-44 board
Measuring Instrument	Frequency counter
Adjustment Element	CV001 on CH-44 board
Specified Value	3579545 ± 50 Hz

Note: Connect the frequency counter through a buffer amplifier (oscilloscope, etc.) having high input impedance (at least 1 MΩ) and low capacitance (less than 10 pF).

Adjustment method:

1) Adjust to 3579545 ± 50 Hz using CV001.

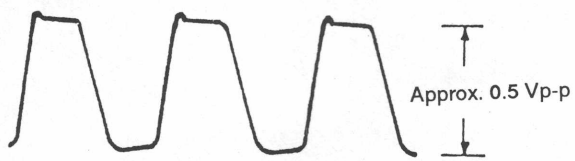

Fig. 8-18.

8-5-4. Y/C Separation Comb-type Filter Adjustment (VI-57 Board)

Mode	E-E
Signal	Color bars
Measurement Point	Pin ㉖ of IC201
Measuring Instrument	Oscilloscope
Adjustment Element	LV201 and RV201
Specified Value	Minimum chroma component (less than 50 mVp-p)

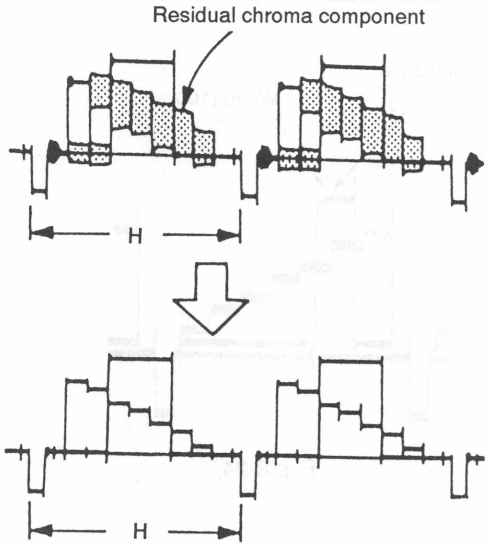

Fig. 8-19.

8-5-5. Y Comb-type Filter Adjustment (VI-57 Board)

Mode	E-E (LP mode)
Signal	Color bars
Measurement Point	Pin ⑫ of IC201
Measuring Instrument	Oscilloscope (1: 1 probe used)
Adjustment Element	RV202
Specified Value	Set amplitude to minimum

Note: Be sure to perform adjustment in LP mode.

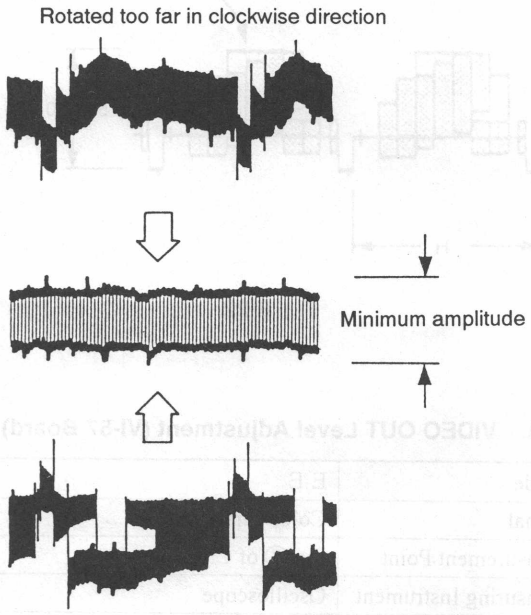

Fig. 8-20.

8-5-6. SYNC AGC Adjustment (VI-57 Board)

Mode	E-E
Signal	Color bars
Measurement Point	Pin ㊲ of IC101
Measuring Instrument	Oscilloscope
Adjustment Element	RV102
Specified Value	0.50 ± 0.025 Vp-p

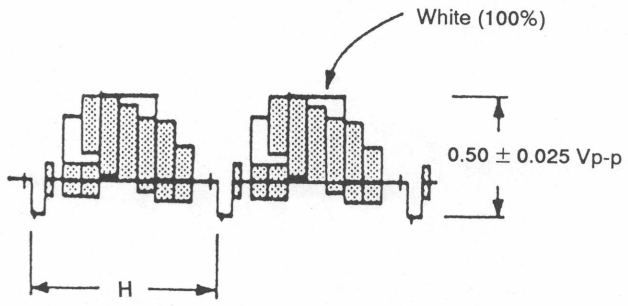

Fig. 8-21.

8-5-7. 31 AMP Gain Adjustment (VI-57 Board)

Mode	E-E
Signal	Color bars
Measurement Point	Pin ㊴ of IC101
Measuring Instrument	Oscilloscope
Adjustment Element	RV108
Specified Value	0.50 ± 0.025 Vp-p

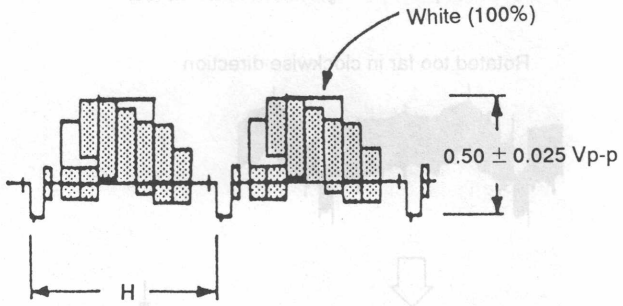

Fig. 8-22.

8-5-8. VIDEO OUT Level Adjustment (VI-57 Board)

Mode	E-E
Signal	Color bars
Measurement Point	Pin ⑦ of CN701
Measuring Instrument	Oscilloscope
Adjustment Element	RV101
Specified Value	1.01 ± 0.03 Vp-p

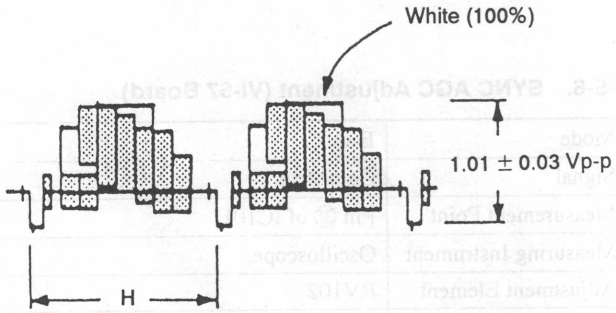

Fig. 8-23.

8-5-9. PB Emphasis Adjustment (VI-57 Board)

Mode	Playback
Signal	Alignment tape: Operation checking (WR5-5NSP or WR5-4NSP) Color bar section
Measurement Point	Pin ⑤ or Pin ⑦ of CN701
Measuring Instrument	Oscilloscope
Adjustment Element	RV107
Specified Value	100% white level is flat

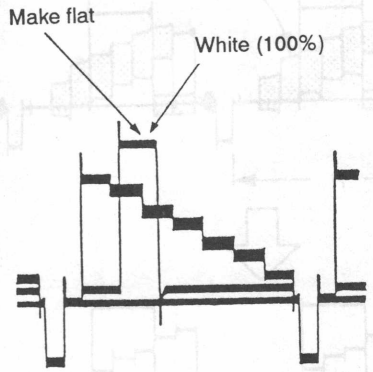

Fig. 8-24.

8-5-10. STD Mode PB Y Level Adjustment (VI-57 Board)

Mode	Playback
Signal	Alignment tape: Operation checking (WR5-5NSP or WR5-4NSP) Color bar section
Measurement Point	Pin ⑤ or Pin ⑦ of CN701
Measuring Instrument	Oscilloscope
Adjustment Element	RV109
Specified Value	0.99 ± 0.03 Vp-p

Note: 1) Set the picture quality adjustment knob to the center click position.
2) After adjustment, be sure to perform "8-5-11. Hi8 Mode PB Y Level Adjustment".

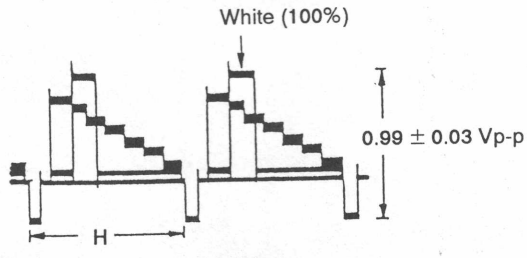

Fig. 8-25.

8-5-11. Hi8 Mode PB Y Level Adjustment (VI-57 Board)

Mode	Playback
Signal	Alignment tape: Operation checking (WR5-8NSE) Color bar section
Measurement Point	Pin ⑤ or Pin ⑦ of CN701
Measuring Instrument	Oscilloscope
Adjustment Element	RV110
Specified Value	0.99 ± 0.03 Vp-p

Note: 1) Set the picture quality adjustment knob to the center click position.
2) Be sure to perform "8-5-10. STD Mode PB Y Level Adjustment" before this adjustment.

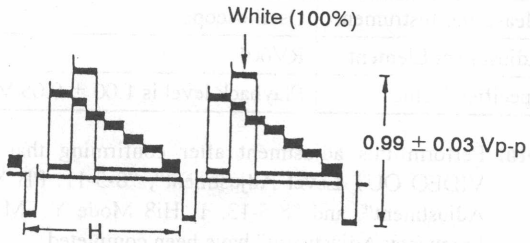

Fig. 8-26.

8-5-12. STD Mode Y FM Carrier Frequency, Y FM Deviation Adjustment

Note: After adjustment, perform "8-5-13. Hi8 Mode Y FM Carrier Frequency, Y FM Deviation Adjustment".

1. STD mode Y FM carrier frequency adjustment (VI-57 board)

Mode	E-E
Signal	No signal
Measurement Point	Pin ⑤ (REC RF) of CN003
Measuring Instrument	Frequency counter
Adjustment Element	RV605
Specified Value	4.40 ± 0.03 MHz

Adjustment method:
1) Insert an MP-type cassette tape.
2) Adjust to 4.40 ± 0.03 MHz using RV605.
3) Perform "2. STD Mode Y FM Deviation Adjustment".

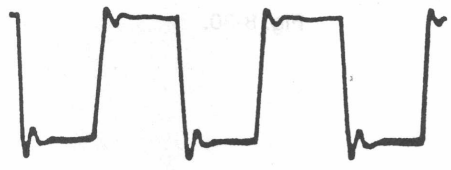

4.40 ± 0.03 MHz

Fig. 8-27.

2. STD mode Y FM deviation adjustment (VI-57 board)

Mode	REC and playback
Signal	Color bars
Measurement Point	Pin ⑤ or Pin ⑦ of CN701
Measuring Instrument	Oscilloscope
Adjustment Element	RV602
Specified Value	Playback level is 1.00 ± 0.05 Vp-p

Note: Perform this adjustment after confirming that "8-5-8. VIDEO OUT Level Adjustment", "8-5-10. STD Mode PB Y Level Adjustment", and "8-5-12. 1. STD Mode Y FM Carrier Frequency Adjustment" have been completed.

Adjustment method:
1) Insert an MP type cassette tape.
2) Record the color bar signal.
3) Playback the recorded signal.
4) Check the playback output level.
Specified value: 1.00 ± 0.05 Vp-p
5) If the specified value is not satisfied, rotate RV602 as described below and repeat steps 1) through 3).

	Rotational direction for RV602
Larger than specified value	Counterclockwise direction (↺)
Smaller than specified value	Clockwise direction (↻)

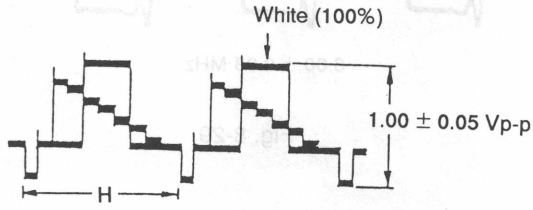

Fig. 8-28.

8-5-13. Hi8 Mode Y FM Carrier Frequency, Y FM Deviation Adjustment

Notes: 1) Perform this adjustment after "8-5-11. STD Mode Y FM Carrier Frequency, Y FM Deviation Adjustment".
2) Before adjustment, confirm that the Hi8 switch (SW026 on FT-37 board) is set to the AUTO position, and that the connector is attached to the S video terminal (CNJ701 on IO-17 board) of the line input (even when there is no signal).

1. Hi8 mode Y FM carrier frequency adjustment (VI-57 board)

Mode	E-E
Signal	No signal
Measurement Point	Pin ⑤ of CN003
Measuring Instrument	Frequency counter
Adjustment Element	RV604
Specified Value	6.00 ± 0.03 MHz

Adjustment method:
1) Insert an ME-type cassette tape.
2) Adjust to 6.00 ± 0.03 MHz using RV604.
3) Perform "2. Hi8 Mode Y FM Deviation Adjustment".

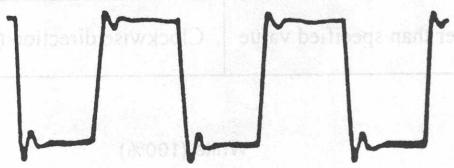

6.00 ± 0.03 MHz

Fig. 8-29.

2. Hi8 mode Y FM deviation adjustment (VI-57 board)

Mode	REC and playback
Signal	Color bars
Measurement Point	Pin ⑤ or Pin ⑦ of CN701
Measuring Instrument	Oscilloscope
Adjustment Element	RV601
Specified Value	Playback level is 1.00 ± 0.05 Vp-p

Note: Perform this adjustment after confirming that "8-5-8. VIDEO OUT Level Adjustment", "8-5-11. PB Y Level Adjustment", and "8-5-13. 1. Hi8 Mode Y FM Carrier Frequency Adjustment" have been completed.

Adjustment method:
1) Insert an ME-type cassette tape.
2) Record the color bar signal.
3) Playback the recorded signal.
4) Check the playback output level.
Specified value: 1.00 ± 0.05 Vp-p
5) If the specified value is not satisfied, rotate RV601 as described below and repeat steps 1) through 3).

	Rotational direction for RV601
Larger than specified value	Counterclockwise direction (↺)
Smaller than specified value	Clockwise direction (↻)

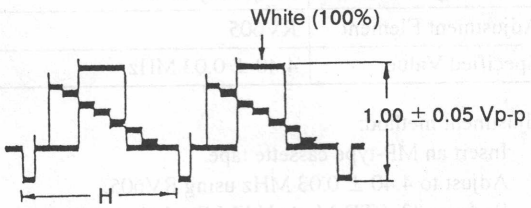

Fig. 8-30.

8-5-14. 378fH VCO Adjustment (CH-44/VI-57 Board)

Mode	E-E
Signal	Color bars
Measurement Point	Pin ㉖ of IC001 on CH-44 board
Measuring Instrument	Digital voltmeter
Adjustment Element	RV001 on CH-44 board
Specified Value	3.00 ± 0.05 Vdc

Adjustment method:

1) Adjust to 3.00 ± 0.05 Vdc using RV001.

8-5-15. Chroma Emphasis fo Adjustment (CH-44/VI-57 Board)

Mode	E-E
Signal	Color bars
Measurement Point	Pin ⑧ of IC002 on CH-44 board
Measuring Instrument	Oscilloscope
Adjustment Element	T001 on CH-44 board
Specified Value	Minimum chroma component

Preparations:

1) Connect the following two locations using 10 kΩ resistors.
   - CH-44 board: Pin ㉗ (ACC) — Pin ① (GND)
   - CH-44 board: Pin ㉗ (ACC) — Pin ㊲ (REG 5V)

Adjustment method:

1) Adjust T001 for minimum chroma component.
2) Remove the 10 kΩ resistors after adjustment.

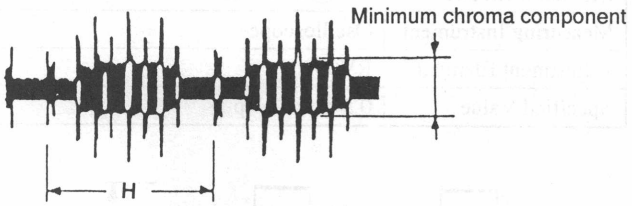

Fig. 8-31.

8-5-16. Carrier Balance Adjustment (CH-44/VI-57 Board)

Mode	E-E
Signal	Color bars
Measurement Point	Pin ㉘ of IC001 on CH-44 board
Measuring Instrument	Oscilloscope
Adjustment Element	RV002 on CH-44 board
Specified Value	Minimum 4.32 MHz component

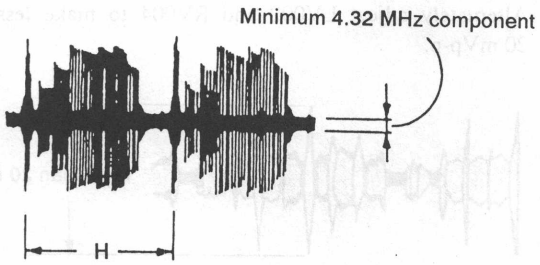

Fig. 8-32.

8-5-17. 1H Comb-type Filter Adjustment (YC-56 Board)

Mode	E-E
Signal	Color bars
Measurement Point	Emitter of Q004
Measuring Instrument	Oscilloscope
Adjustment Element	LV001, RV001
Specified Value	Minimum (less than 20 mVp-p) residual chroma component

Adjustment method:

1) Alternately adjust LV001 and RV001 so that there is minimum (less than 20 mVp-p) residual chroma component.

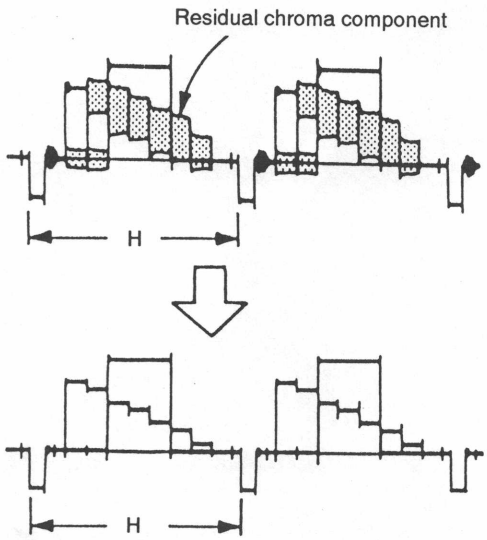

Fig. 8-33.

8-5-18. 2H Comb-type Filter Adjustment (YC-56 Board)

Mode	E-E
Signal	Color bars
Measurement Point	Emitter of Q014
Measuring Instrument	Oscilloscope
Adjustment Element	LV002, RV004
Specified Value	Less than 20 mVp-p

Adjustment method:

1) Alternately adjust LV002 and RV004 to make less than 20 mVp-p.

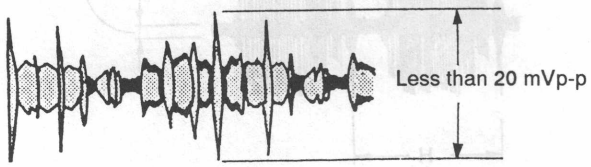

Fig. 8-34.

8-5-19. DC Offset Adjustment (YC-56 Board)

Mode	E-E
Signal	No signal
Measurement Point	+: Emitter of Q025 –: Emitter of Q026
Measuring Instrument	Digital voltmeter
Adjustment Element	RV005
Specified Value	100 ± 20 mVdc

8-5-20. C Comb-type Filter Cancel Adjustment (YC-56 Board)

Mode	E-E
Signal	All green screen
Measurement Point	Emitter of Q302
Measuring Instrument	Oscilloscope
Adjustment Element	RV003
Specified Value	Minimize the section shown in Fig. 8-35.

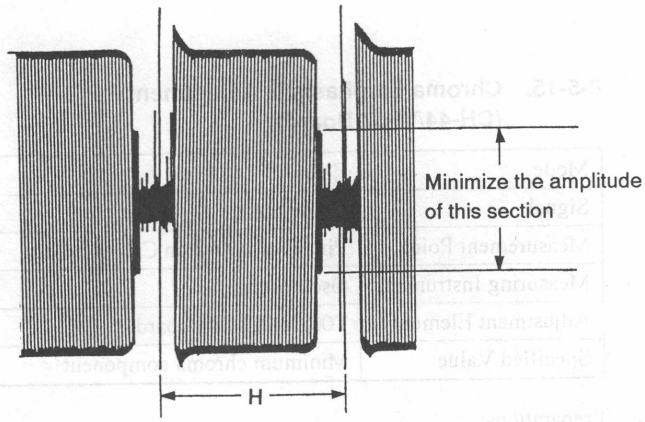

Fig. 8-35.

8-5-21. Ys Level Adjustment (YC-56 Board)

Mode	E-E
Signal	Color bars
Measurement Point	Pin ⑤ of W001
Measuring Instrument	Oscilloscope
Adjustment Element	RV002
Specified Value	0.5 ± 0.02 Vp-p

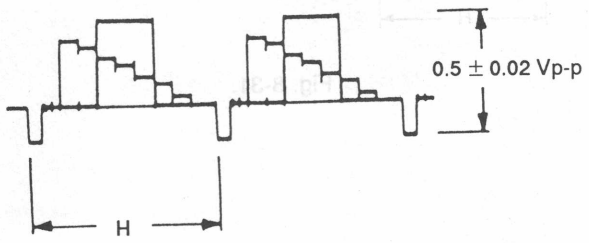

Fig. 8-36.

8-5-22. REC Y Level Adjustment (VI-57 Board)

Mode	E-E (SP)
Signal	No signal
Measurement Point	Pin ⑤ of CN003
Measuring Instrument	Oscilloscope
Adjustment Element	RV501
Specified Value	0.65 ± 0.02 Vp-p

Notes: 1) Before adjustment, be sure to rotate RV502 to set the output to maximum.
2) Be sure to perform "8-5-23. REC C Level Adjustment" and "8-5-24. REC RF Level Adjustment" after this adjustment.
3) Use MP-type tape.

Adjustment method:
1) Set to the SP mode using the SP/LP button.
2) Adjust to 0.65 ± 0.02 Vp-p using RV501.

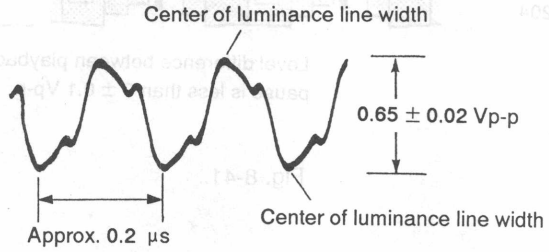

Fig. 8-37.

8-5-23. REC C Level Adjustment (VI-57 Board)

Mode	E-E (SP)
Signal	Color bars
Measurement Point	Collector of Q502
Measuring Instrument	Oscilloscope
Adjustment Element	RV503
Specified Value	0.13 ± 0.01 Vp-p

Note: Use MP-type tape.

Preparations:
1) Use jumper wires to make the following three connections.
- Emitter of Q540 (REC Y) — REG 5V (Pin ㊲ on CH-44 board)
- Pin ① of W002 (REG AFM) — GND
- Pin ⑤ of W005 (REG ATF) — GND

Adjustment method:
1) Set to the SP mode using the SP/LP button.
2) Adjust to 0.13 ± 0.01 Vp-p using RV503.

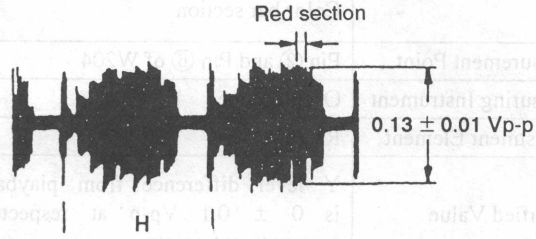

Fig. 8-38.

8-5-24. REC RF Level Adjustment (VI-57 Board)

Mode	E-E
Signal	No signal
Measurement Point	TP007
Measuring Instrument	Oscilloscope
Adjustment Element	RV502
Specified Value	520 ± 5 mVp-p

Note: Use MP-type tape.

Adjustment method:
1) Set the HI BAND switch (SW026 on FT-37 board) to the OFF position.
2) Adjust to 520 ± 5 mVp-p using RV502.

Fig. 8-39.

8-5-25. D.O.C. Level Adjustment (VI-57 Board)

Mode	Playback
Signal	Self-recording and playback of Hi8 in MPHG tape, and color bars in LP mode.
Measurement Point	Pin ③ of Q951
Measuring Instrument	Digital voltmeter
Adjustment Element	RV950
Specified Value	1.70 ± 0.01V

8-5-26. Direct Y Signal Level Adjustment (JG-11 Board)

Mode	Playback pause
Signal	Alignment tape: Operation checking (WR5-5NSP or WR5-4NSP) Color bar section
Measurement Point	Pin ② and Pin ⑥ of W204
Measuring Instrument	Oscilloscope
Adjustment Element	RV201
Specified Value	Y level difference from playback is 0 ± 0.1 Vp-p at respective measurement points

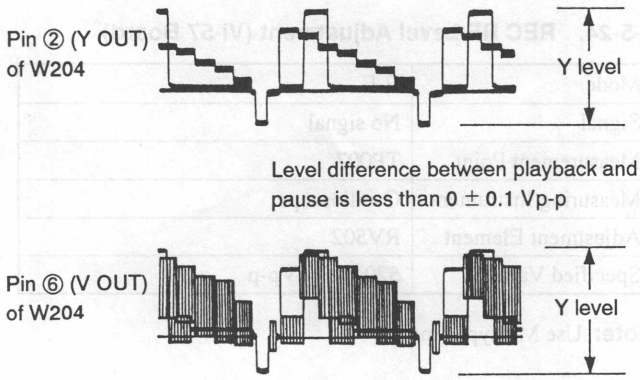

Fig. 8-40.

8-5-27. Direct C Signal Level Adjustment (JG-11 Board)

Mode	Playback pause
Signal	Alignment tape Operation checking (WR5-5NSP or WR5-4NSP) Color bar section
Measurement Point	Pin ④ of W204
Measuring Instrument	Oscilloscope
Adjustment Element	RV202
Specified Value	C level difference from playback is 0 ± 0.1 Vp-p

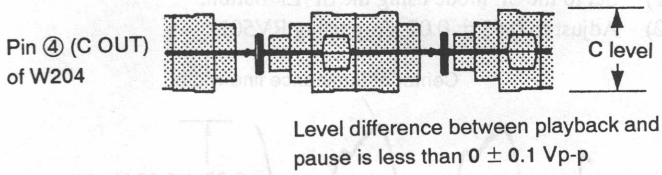

Fig. 8-41.

8-6. AUDIO SYSTEM ADJUSTMENTS

- Perform adjustment using the color bar signal as the video signal input.

[Connection of measuring instruments for audio]

In addition to the measuring instruments for the video system, the measuring instruments shown in the figure below are used for the audio system.

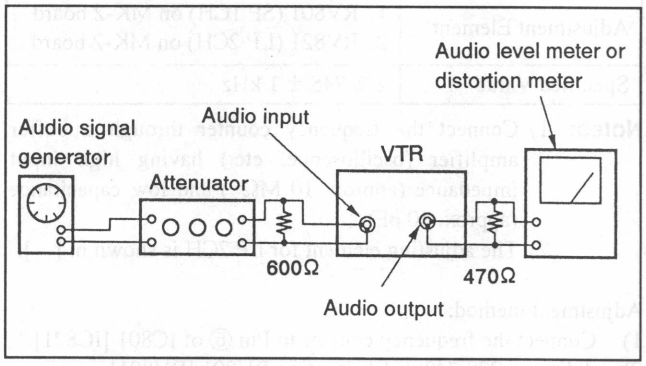

Fig. 8-42.

[Adjustment procedure]

1) PCM Master Clock Oscillation Frequency Adjustment
2) REC PCM Level Check
3) MULTI PILOT Frequency Check
4) PCM Playback VCO Free Oscillation Frequency Adjustment
5) MULTI PILOT Detector Adjustment
6) PCM Playback Level Adjustment
7) E-E Output Level Check
8) PCM Offset Adjustment
9) PCM Recording Level Adjustment
10) Overall Frequency Characteristics Check
11) Overall Distortion Check
12) Overall Noise Level Check

8-6-1. PCM Audio System Adjustment

Unless indicated otherwise, set the VTR switches and controls to the following positions for adjustment.

Input select switch ····· LINE
Audio monitor switch (PCM/mix/normal) ····· PCM
REC LEVEL control ····· [5]
PCM mode switch ····· Normal

Note: The adjusting element for the R channel is indicated in [ ].

1. PCM master clock oscillation frequency adjustment (SP-7 board)

Mode	REC
Signal	No signal
Measurement Point	Pin ③ of CN601
Measuring Instrument	Frequency counter
Adjustment Element	RV602
Specified Value	11.45 ± 0.01 MHz

Adjustment method:

1) Connect TP604 (Pin ⑭ of IC605) and Pin ① (REG 5V) of CN601 using a jumper wire.
2) Adjust to 11.45 ± 0.01 MHz using RV602.
3) Remove the jumper wire.
4) Connect TP604 to GND
5) Confirm that the frequency is at least 11.63 MHz.

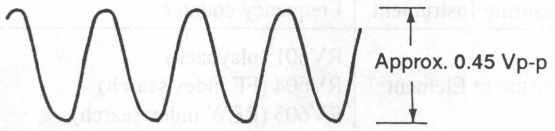

Fig. 8-43.

2. REC PCM level check (SP-7 board)

Mode	REC
Signal	No signal
Measurement Point	Pin ① of CN607
Measuring Instrument	Oscilloscope
Specified Value	Approx. 0.4 Vp-p

Checking method:

1) Confirm that the REC PCM level is approximately 0.4 Vp-p.

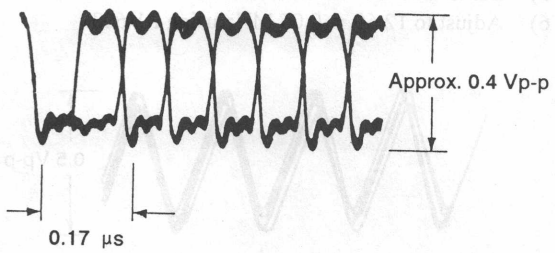

Fig. 8-44.

3. MULTI PILOT frequency check (SP-7 board)

Mode	E-E
Signal	Arbitrary
Measurement Point	Pin ㊴ of IC204
Measuring Instrument	Frequency counter
Specified Value	228.748 ± 0.200 kHz

Checking method:

1) Confirm that the frequency is 228.748 ± 0.200 kHz.

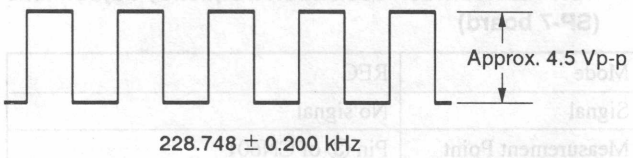

Fig. 8-45.

4. PCM playback VCO free oscillation frequency adjustment (SP-7 board)

Mode	Playback, FF index search, and REW index search
Signal	Any tape
Measurement Point	TP603
Measuring Instrument	Frequency counter
Adjustment Element	RV601 (playback) RV604 (FF index search) RV603 (REW index search)
Specified Value	11.58 ± 0.05 MHz (playback) 10.56 ± 0.05 MHz (FF index search) 12.60 ± 0.05 MHz (REW index search)

Connections:

1) Connect TP600 (Pin ① of IC600) and Pin ① (REG 5V) of CN005 using a jumper wire.
2) Remove CN607 on the SP-7 board.

Adjustment method:

1) Set to the playback mode.
2) Adjust to 11.58 ± 0.05 MHz using RV601.
3) Set to the FF index search mode.
4) Adjust to 10.56 ± 0.05 MHz using RV604.
5) Set to the REW index search mode.
6) Adjust to 12.60 ± 0.05 MHz using RV603.

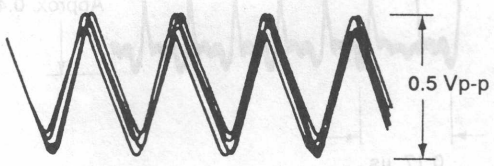

Fig. 8-46.

5. MULTI PILOT detector adjustment (MK-2/AU-54 board)

Mode	E-E
Signal	No signal
Measurement Point	1. Pin ⑤ of IC801 on MK-2 board 2. Pin ⑤ of IC821 on MK-2 board
Measuring Instrument	Frequency counter
Adjustment Element	1. RV801 (SP 1CH) on MK-2 board 2. RV821 (LP 2CH) on MK-2 board
Specified Value	228.748 ± 1 kHz

Notes: 1) Connect the frequency counter through a buffer amplifier (oscilloscope, etc.) having high input impedance (approx. 10 MΩ) and low capacitance (approx. 10 pF).
2) The adjusting element for LP 2CH is shown in [ ].

Adjustment method:

1) Connect the frequency counter to Pin ⑤ of IC801 [IC821].
2) Adjust to 228.748 ± 1 kHz using RV801 [RV821].

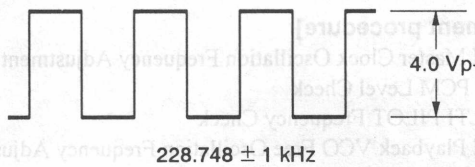

Fig. 8-47.

6. PCM playback level adjustment (AD-12/AU-54 board)

Mode	Playback
Signal	Alignment tape: Operation checking (WR5-5NSP or WR5-4NSP) 400 Hz section
Measurement Point	Audio output L and R
Measuring Instrument	Audio level meter
Adjustment Element	RV705 on AD-12 board
Specified Value	–7.5 ± 0.1 dBs

Adjustment method:

1) Adjust to –7.5 ± 0.1 dBs using RV705.
   Note: If there is a difference in the levels of the left and right channels, adjust to the center value.

7. E-E output level check

Mode	E-E
Signal	400 Hz, –7.5 dBs: audio input L [R]
Measurement Point	Audio output L [R]
Measuring Instrument	Audio level meter
Specified Value	–7.5 ± 2 dBs

Checking method:
1) Set the REC LEVEL control to the [5] position.
2) Confirm that –7.5 dB is indicated on the REC LEVEL meter.
3) Confirm that the audio output L [R] level is –7.5 ± 2 dB.

8. PCM offset adjustment (AD-12/AU-54 board)

Mode	Self-recording and playback (SP mode)
Signal	400 Hz + 3 dBs
Measurement Point	Pin ④ [Pin ⑤] on AD-12 board
Measuring Instrument	Oscilloscope
Adjustment Element	RV701 [RV751] on AD-12 board
Specified Value	Even clipping above and below waveform

Adjustment method:
1) Perform self-recording and playback, then confirm that there is even clipping above and below the waveform.
2) If the amount of clipping is not even, rotate RV701 [RV751] as shown below, and confirm 1) again.

	Rotational direction of RV701 [RV751] as seen from parts side
When amount of upper clipping is smaller	Clockwise direction (↻)
When amount of upper clipping is greater	Counterclockwise direction (↺)

Note: Adjust RCH and LCH alternately as they will affect each other.

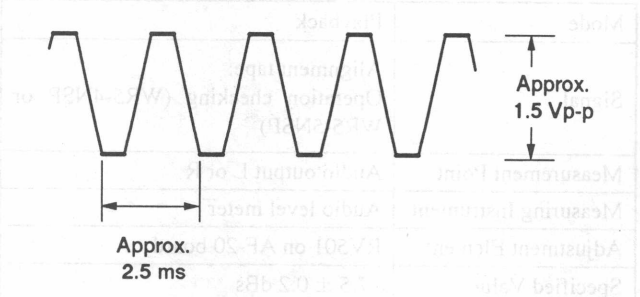

Fig. 8-48.

9. PCM recording level adjustment (AD-12/AU-54 board)

Mode	Self-recording and playback
Signal	400 Hz, –7.5 dBs: audio input (L and R)
Measurement Point	Audio output L [R]
Measuring Instrument	Audio level meter
Adjustment Element	RV703 [RV753] on AD-12 board
Specified Value	–7.5 ± 0.5 dBs

Note: Confirm that "PCM Playback Level Adjustment" has been completed.

Adjustment method:
1) Set to the E-E mode.
2) Adjust the REC LEVEL control so that the audio output level is –7.5 dBs. (Both left and right channels)
3) Record the signal.
4) Playback the recorded section.
5) Confirm that the audio output L [R] level is –7.5 ± 0.5 dBs.
6) If the specified value is not satisfied, adjust with RV703 [RV753] and repeat steps 1) through 5).

10. Overall frequency characteristics check

Mode	Self-recording and playback
Measurement Point	Ⓐ 400 Hz, –7.5 dBs Ⓑ 20 Hz, –7.5 dBs Ⓒ 14 kHz, –7.5 dBs :Audio input L [R]
Measuring Instrument	Audio output L [R]
Adjustment Element	Audio level meter
Specified Value	Confirm that when the 400 Hz playback output level is 0 dB, the 20 Hz playback output level is 0 ± 2 dB and the 14 kHz playback output level is $0\ ^{+2}_{-3}$ dB.

Checking method:
1) Adjust the REC LEVEL control so that the audio output L [R] level is –7.5 dBs.
2) Record signals Ⓐ through Ⓒ in order.
3) Playback the recorded section.
4) Confirm that when the 400 Hz playback output level is 0 dB, the 20 Hz playback output level is 0 ± 2 dB and the 14 kHz playback output level is $0\ ^{+2}_{-3}$ dB.

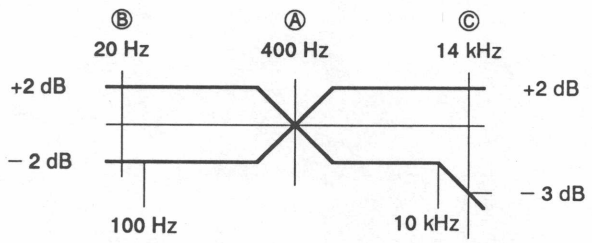

Fig. 8-49.

11. Overall distortion check

Mode	Self-recording and playback
Signal	400 Hz, –7.5 dBs: Audio input L [R]
Measurement Point	Audio output L [R]
Measuring Instrument	Distortion meter
Specified Value	Less than 0.35%

Checking method:
1) Record the signal.
2) Playback the recorded section.
3) Confirm that the distortion is less than 0.35%.

12. Overall noise level check

Mode	Self-recording and playback
Signal	No signal (Shorting plug inserted into both audio input L and R terminals)
Measurement Point	Audio output L [R]
Measuring Instrument	Audio level meter
Specified Value	Less than –87.5 dBs *2

Checking method:
1) Record the signal.
2) Playback the recorded section.
3) Confirm that the noise level is less than –87.5 dBs.*2
   *2: Value when IHF-A hearing compensation filter is used.

8-6-2. AFM Audio System Adjustment

Unless indicated otherwise, set the VCR switches and controls to the following positions for adjustment.

Input select switch ····· LINE
Audio monitor switch (PCM/mix/normal) ····· Normal

[Adjustment Procedure]
1) AFM carrier frequency adjustment
2) AFM deviation adjustment
3) E-E output level check
4) Overall level characteristics check
5) Overall frequency characteristics check
6) Overall distortion check
7) Overall noise level check

1. AFM carrier frequency adjustment (AF-20/AU-54 board)

Mode	REC (SP mode)
Signal	No signal
Measurement Point	Pin ⑬ on AF-20 board (REC AFM)
Measuring Instrument	Frequency counter and oscilloscope
Adjustment Element	RV503 on AF-20 board
Specified Value	1500 ± 3 kHz

Adjustment method:
1) Adjust to 1500 ± 3 kHz using RV503.

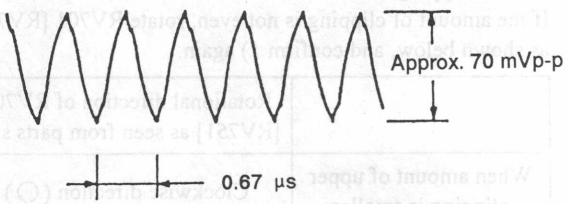

Fig. 8-50.

2. AFM deviation adjustment (AF-20/AU-54 board)

Mode	Playback
Signal	Alignment tape: Operation checking (WR5-4NSP or WR5-5NSP)
Measurement Point	Audio output L or R
Measuring Instrument	Audio level meter
Adjustment Element	RV501 on AF-20 board
Specified Value	–7.5 ± 0.2 dBs

Adjustment method:
1) Adjust to –7.5 ± 0.2 dBs using RV501.

3. E-E output level check

Mode	E-E
Signal	400 Hz, –7.5 dBs: Audio input (Both L and R channels)
Measurement Point	Audio output L [R]
Measuring Instrument	Audio level meter
Specified Value	–7.5 ± 2 dBs

Checking method:

1) Confirm that the audio output L [R] level is –7.5 ± 2 dBs.

4. Overall level characteristics check

Mode	Recording (SP mode)
Signal	400 Hz, –7.5 dBs: Audio input (Both L and R channels)
Measurement Point	Audio output L or R
Measuring Instrument	Audio level meter
Specified Value	7.5 ± 3 dBs

Checking method:

1) Record the signal.
2) Playback the recorded section.
3) Confirm that the audio output level is –7.5 ± 3 dBs.

5. Overall frequency characteristics check

Mode	Self-recording and playback
Signal	Ⓐ 400 Hz, –20 dBs Ⓑ 30 Hz, –20 dBs Ⓒ 14 kHz, –20 dBs : Audio input (Both L and R channels)
Measurement Point	Audio output L or R
Measuring Instrument	Audio level meter
Specified Value	Confirm that when the 400 Hz playback output level is 0 dB, the 30 Hz and the 14 kHz playback output level is 0 ± 3 dB.

Checking method:

1) Record signals Ⓐ through Ⓒ in order.
2) Playback the recorded section.
3) Confirm that when the 400 Hz playback output level is 0 dB, the 30 Hz and the 14 kHz playback output level is 0 ± 3 dB.

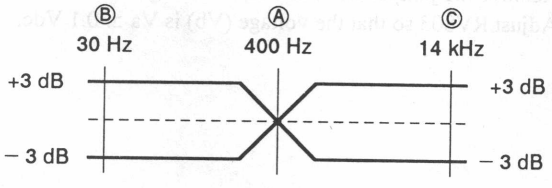

Fig. 8-51. AFM overall frequency response

6. Overall distortion check

The specified value for LP mode is shown in [ ].

Mode	Self-recording and playback
Signal	400 Hz, –7.5 dBs: Audio input (Both L and R channels)
Measurement Point	Audio output L or R
Measuring Instrument	Distortion meter
Specified Value	Less than 0.5% [1.0%] *1

Checking method:

1) Record the signal.
2) Playback the recorded section.
3) Confirm that the distortion is less than 0.5% [1.0%].*1

*1: Value when the filter for distortion measurement is used (Fig. 8-52.). Distortion should be less than 1.0% [2.0%] when the filter is not used.

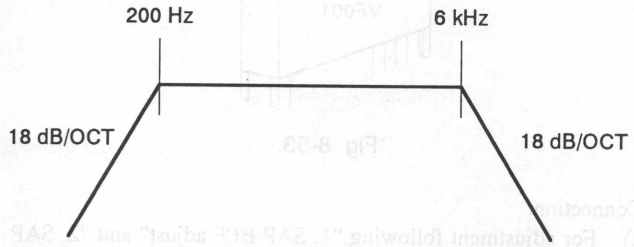

Fig. 8-52. Filter for distortion measuremen

7. Overall noise level check

Mode	Self-recording and playback
Signal	No signal (Shorting plug inserted into both audio input L and R terminals)
Measurement Point	Audio output L or R
Measuring Instrument	Audio level meter
Specified Value	Less than –62 dBs *2

Checking method:

1) Record the signal.
2) Playback the recorded section.
3) Confirm that the noise level is less than –62 dBs.*2

*2: Value when IHF-A hearing compensation filter is used.

8-7. TURNER SYSTEM ADJUSTMENT

8-7-1. RF AGC Adjustment (TU-82 Board)

Mode	E-E
Signal	Broadcasting TV signal
Adjustment Element	VR upper inside of VIF001

Checking method:

1) Adjust monitor TV to its maximum contrast and receive broadcasting TV signal.
2) Turn the VR so that snow noise becomes appear.
3) Turn the VR counterclockwise and set it at a position where snow noise disappears.
4) Receive each channel and confirm that there are no beat, picture distortion and snow noise due to inter modulation.

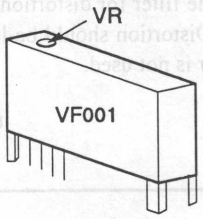

Fig. 8-53.

Connection:

1) For adjustment following "1. SAP BPF adjust" and "2. SAP VCO adjustment", first remove the soldering of cut-land and then connect test equipment on as shown below before making the adjustment.

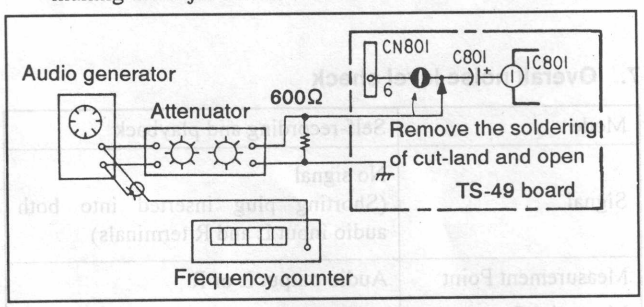

Fig. 8-54.

2) For adjustment following "5. Pilot cancel adjustment" and "6. L-R gain adjustment", first remove the soldering of cut-land then connect test equipment on as shown below before making the adjustment.

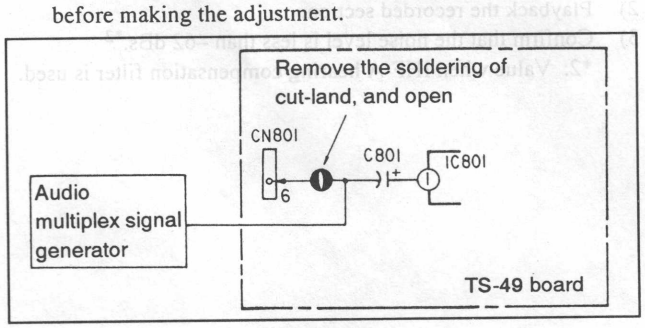

Fig. 8-55.

3) Solder the cut-land after each adjustment in 1) and 2) is completed.

1. SAP BPF adjustment (TS-49 board)

Mode	E-E
Signal	• Frequency 62.94 ± 0.1 kHz (sine wave) • Level at Pin ① of IC801 0.42 Vp-p (148.5 mVrms) • Connection See Fig. 8-54.
Measurement Point	Pin ⑥ of IC801
Measuring Instrument	Oscilloscope
Adjustment Element	RV802
Specified Value	Minimum 62.94 kHz signal level

Adjustment method:

1) By turning RV802, minimize the 62.94 kHz signal level.
2) Reconnect the oscilloscope to Pin ㊲ of IC801.
3) After just the input signal frequency to 78.67 ± 0.1 kHz.
4) Check to assure the 78.67 kHz signal level at 30 mVp-p or lower.

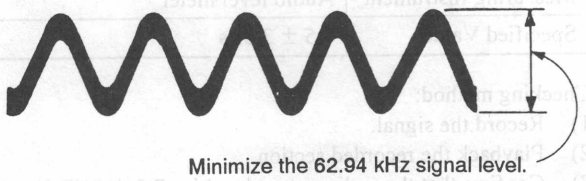

Fig. 8-56.

2. SAP VCO adjustment (TS-49 board)

Mode	E-E
Signal	• Frequency 78.67 ± 0.1 kHz • Level at Pin ① of IC801 0.42 Vp-p (148.5 mVrms) • Connection See Fig. 8-54.
Measurement Point	Pin ㉕ of IC801
Measuring Instrument	Digital voltmeter
Adjustment Element	RV803
Specified Value	Va=3.4 ± 0.4 Vdc Vb=Va ± 0.1 Vdc

Adjustment method:

1) Connect the negative side of C801 to GND with a jumper wire.
2) Check that the voltage (Va) is 3.4 ± 0.4 Vdc.
3) Remove the jumper wire, and input the signal.
4) Adjust RV803 so that the voltage (Vb) is Va ± 0.1 Vdc.

3. SAP Variable de-emphasis adjustment (TS-49 board)

Mode	E-E
Signal	• Frequency 1. 300 Hz (sine wave) 2. 8 kHz (sine wave) • Level at C751 negative side 1. –23.3 dBs (53 mVrms) 2. –16.2 dBs (120 mVrms) • Connection See Fig. 8-57.
Measurement Point	Pin ⑤ of IC850
Measuring Instrument	Audio level meter
Adjustment Element	RV752
Specified Value	1. Va=–23 ± 6dBs 2. Vb=Va-11.3 ± 0.3 dBs

Connection:

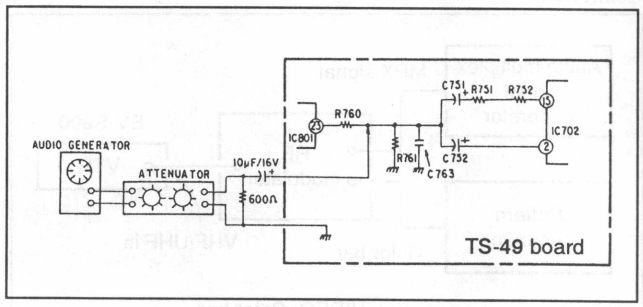

Fig. 8-57.

Adjustment method:

1) Supply the 300 Hz, –23.3 dBs signal to C751 negative side.
2) Set RV752 mechanical center.
3) Check that the 300 Hz level (Va) of Pin ⑤ of IC850 is –23 ± 6 dBs.
4) Supply so that the 8 kHz, –16.2 dBs signal to C751 negative side.
5) Adjust RV752 so that the 8 kHz level (V6) of Pin ⑤ of IC850 is Va–11.3 ± 0.3 dBs.
6) Remove the jumper wire.

4. STEREO VCO adjustment (TS-49 board)

Mode	E-E
Signal	None (Connect the negative side C801 to GND with a jumper wire.)
Measurement Point	Junction of RV805 and R814
Measuring Instrument	Frequency counter
Adjustment Element	RV805
Specified Value	62.94 ± 0.1 kHz

Note: Connect the frequency counter with a probe having high input impedance and low capacity.

Adjustment method:

1) By turning RV805, attain a 62.94 ± 0.1 kHz counter output.

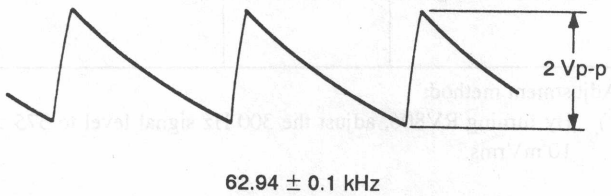

Fig. 8-58.

5. Pilot cancel adjustment (TS-49 board)

Mode	E-E
Signal	Stereo pilot signal (15.734 kHz) only. • Connection See Fig. 8-55. • Level at Pin ① of IC801 0.14 Vp-p (49.5 mVrms)
Measurement Point	Pin ㊵ of IC801
Measuring Instrument	Oscilloscope
Adjustment Element	RV804
Specified Value	Minimum residual pilot signal

Adjustment method:

1) By turning RV804 minimize the residual Pilot signal level.

Note: The "STEREO" indicator on the front panel should have been turned on.

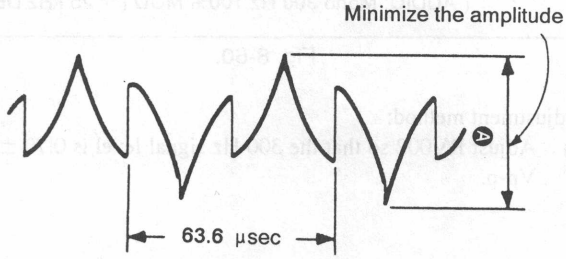

Fig. 8-59.

6. L-R gain adjustment (TS-49 board)

Mode	E-E
Signal	• MPX signal: See Table • Connection: See Fig. 8-55.
Measurement Point	Pin ㉔ of IC801
Measuring Instrument	Audio level meter
Adjustment Element	RV806
Specified Value	375 ± 10 mVrms

Signal	Modulation	Signal Level at Pin ① of IC801
Stereo Pilot Signal (15.734 kHz)	ON	1.4 Vp-p (495 mVms)
Sub-Channel Signal	300 Hz 100%	1.4 Vp-p

Adjustment method:

1) By turning RV806, adjust the 300 Hz signal level to 375 ± 10 mVrms.

7. MPX input level adjustment (TU-82 board)

Mode	E-E
Signal	1 kHz, 100% MOD (± 25 kHz dev) See Fig. 8-60.
Measurement Point	Pin ① of IC801.
Measuring Instrument	Oscilloscope
Adjustment Element	RV002
Specified Value	0.70 ± 0.03 Vp-p

Connection:

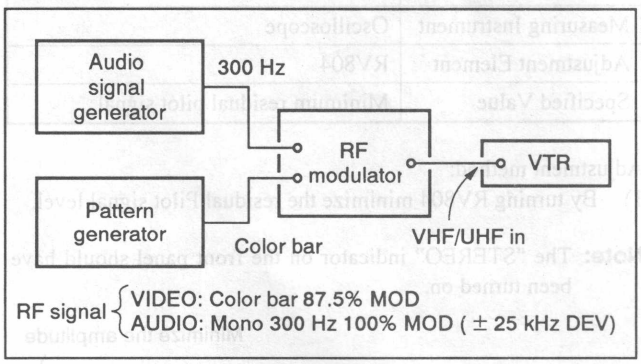

Fig. 8-60.

Adjustment method:

1) Adjust RV002 so that the 300 Hz signal level is 0.70 ± 0.03 Vp-p.

8. Separation adjustment (TS-49 board)

Mode	E-E
Signal	• MPX signal: See Table • Connection: See Fig. 8-61.
Measurement Point	Pin ㉒ of IC801 (Rch OUT) Pin ㉓ of IC801 (Lch OUT)
Measuring Instrument	Headphones or Oscilloscope
Adjustment Element	RV702, RV806
Specified Value	Minimum crosstalk

Signal	Modulation
Stereo Pilot Signal	ON
Main Channel Signal	Lch: 400 Hz, 30% Rch: 2 kHz, 30% NOISE REDUCTION: ON PREEMPHASIS: ON
Sub-channel Signal	

Connection:

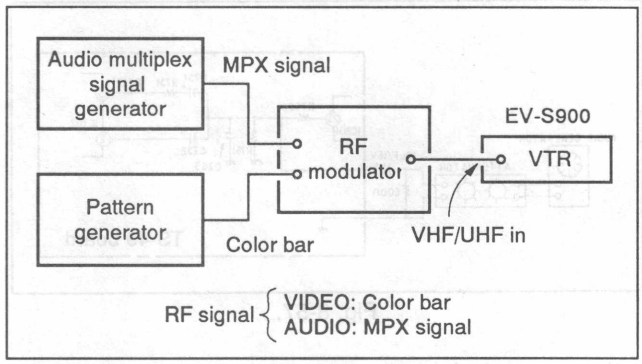

Fig. 8-61.

Adjustment method:

1) Adjust with RV806 so that 2 kHz component of Pin @823@ of IC801 becomes minimum.
2) Adjust with RV702 so that 400 Hz component of Pin ㉒ of IC801 becomes minimum.
3) Repeat step 1) once again.

Note: Be sure to perform adjustment 1) again finally.

8-8. ADJUSTMENT RELATED PARTS ARRANGEMENT DIAGRAMS

Note: Parts enclosed in dotted lines are parts on the opposite side of the board.

DR-35 BOARD (CONDUCTOR SIDE)

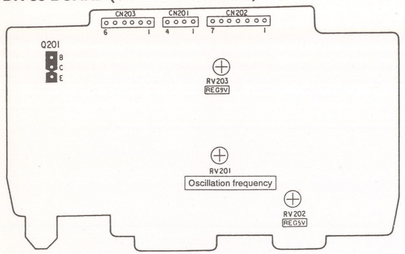

DT-63 BOARD (CONDUCTOR SIDE)

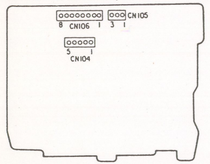

FT-37 BOARD (COMPONENT SIDE)

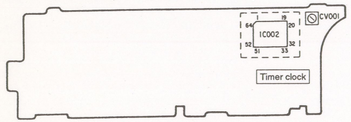

RP-68 BOARD (COMPONENT SIDE)

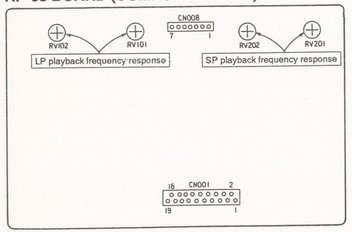

CH-44 BOARD (COMPONENT SIDE)

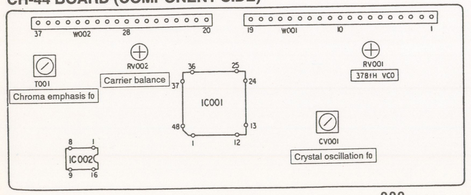

SP-7 BOARD (COMPONENT SIDE)

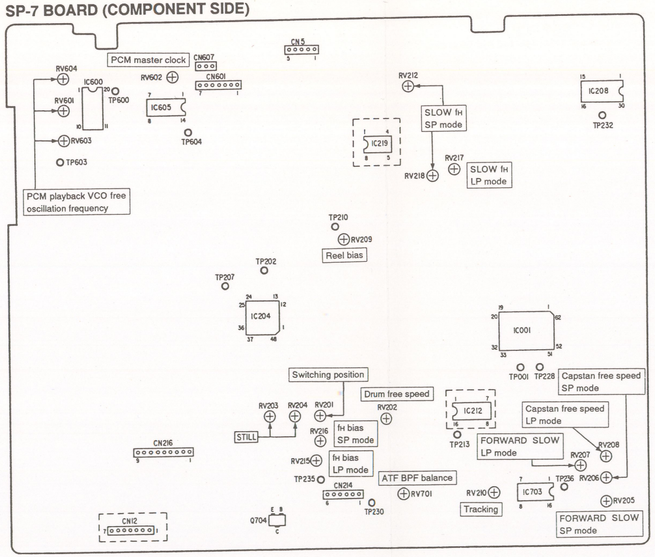

VI-57 BOARD (COMPONENT SIDE)

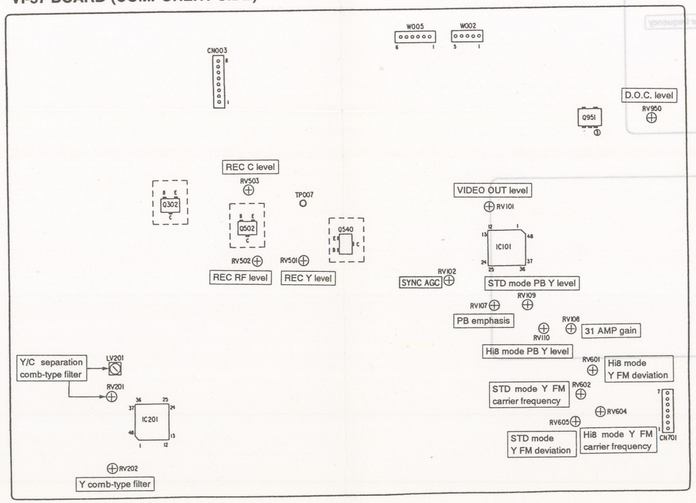

YC-56 BOARD (COMPONENT SIDE)

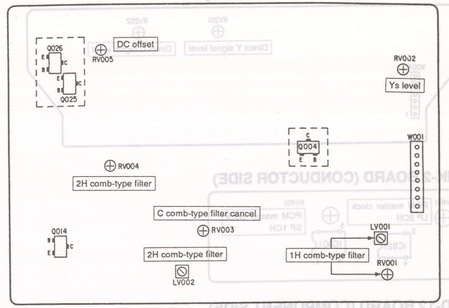

JG-11 BOARD (COMPONENT SIDE)

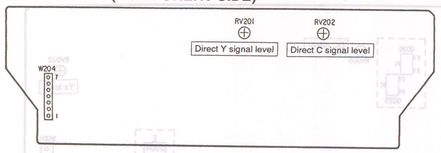

MK-2 BOARD (CONDUCTOR SIDE)

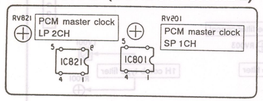

AD-12 BOARD (COMPONENT SIDE)

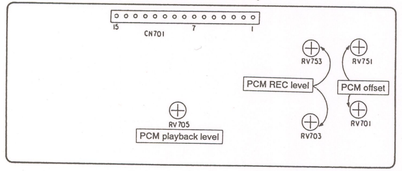

AF-20 BOARD (CONDUCTOR SIDE)

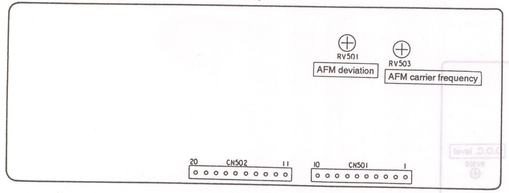

TS-49 BOARD (CONDUCTOR SIDE)

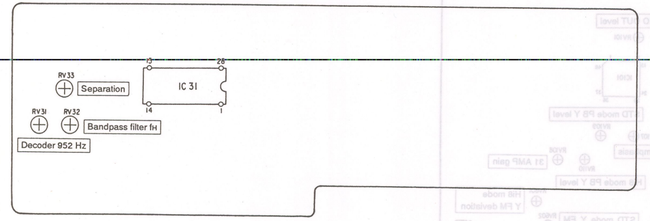

1. FUNCTION OF CONTROLS

A-6

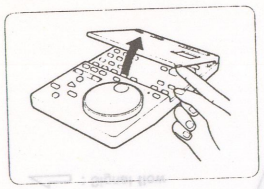

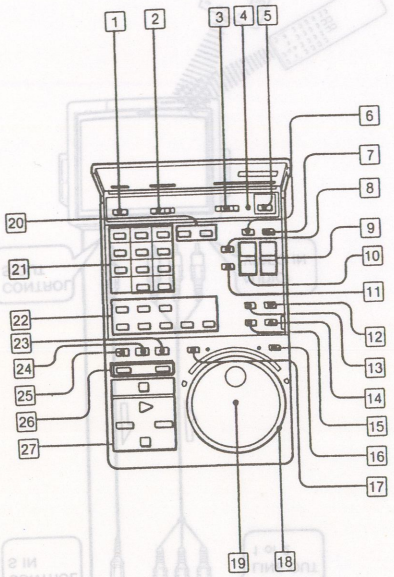

Remote Commander RMT-424 A-6

The buttons without the * mark have the same function as the buttons on the VCR with the similar name or mark.
The buttons with an orange dot can be used to operate Sony TVs having a ■ mark.

1 OPEN/CLOSE button
2 Command mode selector*
3 Remote control TV/VTR selector*
4 Transmitting indicator*
Lights when any button on the Commander is pressed.
5 POWER switch
6 MUTING button*
Press to mute the sound. Press again to restore it.
7 TV/VTR button
8 DISPLAY button*
Press to retain the on-screen display. Press again to extinguish it.
9 TRACK/CH (channel) +/– button
10 VOL (volume) +/– buttons*
11 SLEEP button
12 COUNTER RESET button
13 COUNTER/REMAIN button
14 SYNCHRO EDIT button
15 AUDIO DUB button
16 TRACK/CH/INDEX button and indicator*
Press when using the JOG dial for digital multi audio track, channel or index number selection.
17 JOGSHUTTLE mode button and lamp*
Press when using the JOG dial and SHUTTLE ring for various speed playback.
18 SHUTTLE ring
19 JOG dial
20 INDEX MARK/ERASE button
21 Number buttons*
22 Various speed playback buttons*
▶❙ (still picture), ◀❙❙/❙❙▶ FRAME (frame-by-frame picture), x1/10/x1/5 (slow motion picture), x1 (normal speed picture), x2 (double speed picture), SCAN (for picture search)
23 AUTO PB (automatic playback) button
Press to play back a tape automatically from the beginning of the tape after rewinding.
24 TAPE RETURN button
25 INDEX button
26 ● REC (recording) buttons
To start recording, press these buttons simultaneously.
27 Tape transport buttons

2. REMOTE COMMANDER SET-UP

B-1

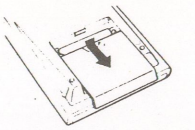

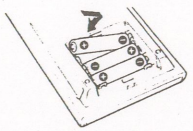

Inserting batteries B-1

1 Open the lid.
2 Insert two size AA (R6) batteries with correct polarity and close the lid.

Battery life

In normal operation, batteries will last for about three months. When the batteries are exhausted, the JOG dial and SHUTTLE ring on the Commander will not function, and then the indicator will not light when any button on the Commander is pressed.

If the Commander is not to be used for a long period of time
Remove the batteries to avoid possible damage from battery leakage.

3. TO CONTROL THIS VTR

B-2

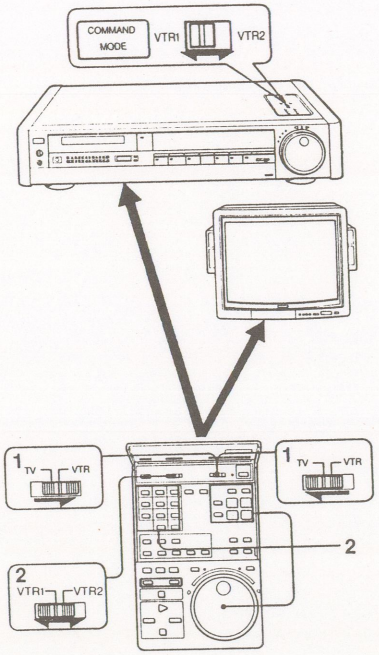

Operation B-2

To operate a VCR

1 Set TV/VTR to VTR.
2 Set the command mode selector to the same position as that of the command mode selector of the VCR.
3 Press the required buttons or turn the JOG dial or SHUTTLE ring.

To operate a Sony remote control TV

The Sony TVs with a ■ mark can be operated with this Commander.

1 Set TV/VTR to TV
2 Press the required buttons or turn the JOG dial or SHUTTLE ring. The buttons marked with an orange dot can be used.

To use the JOG dial and SHUTTLE ring on the Commander
- When using JOG for track number, channel or index number selection, press TRACK/CH/INDEX so that the associated indicator lights.
- When using JOG or SHUTTLE for various speed playback, press JOGSHUTTLE so that the associated indicator lights.
- After using JOG and SHUTTLE, press the same button again to turn off the indicator. The indicator will go out automatically in about 1 minute without pressing the button.

4. TO CONTROL OTHER SONY VIDEO EQUIPMENT OR TV

B-3

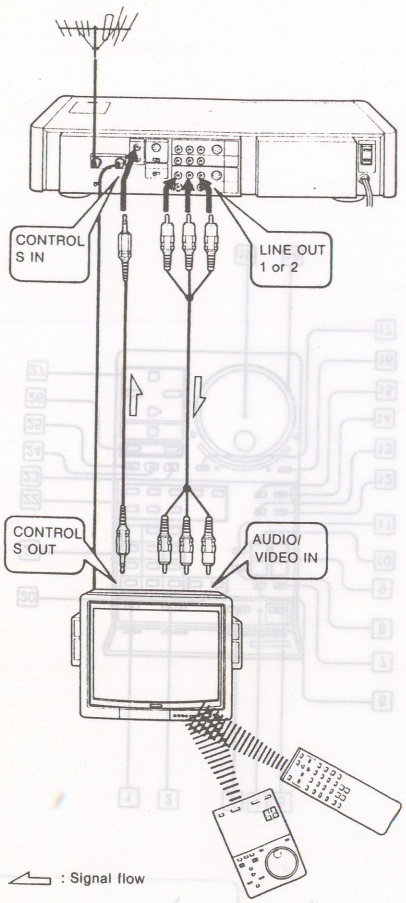

To remotely control two VCRs (this unit and another VCR)

If another VCR is equipped with a command mode selector
To avoid having this VCR and the other equipment functioning simultaneously, set COMMAND MODE on this VCR to the different command mode position from the command mode on the other VCR. Simply by switching the command mode selector on the Commander, you can control two VCRs separately.

If another VCR is not equipped with a command mode selector
Set the command mode selector on the Remote Commander as follows:
VTR1: for Sony Beta format VCRs
VTR2: for Sony 8 mm format VCRs

If another VCR is equipped with a CONTROL L jack
With control L connection you can remotely control the other VCR by pointing the Commander to this VCR.

To remotely control this unit through the other equipment B-3

If your TV or TV tuner is equipped with a CONTROL S output, you can operate this unit by pointing the Commander equipped with this unit or the TV toward the TV or TV tuner. This is convenient when the two units are located apart from each other.

5. PRINTED WIRING BOARDS

JB-6 BOARD (COMPONENT SIDE)

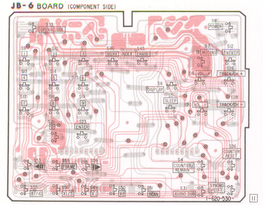

JB-6 BOARD (CONDUCTOR SIDE)

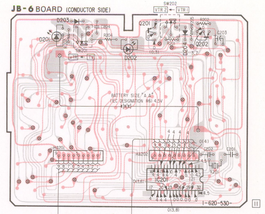

JA-2 BOARD (COMPONENT SIDE)

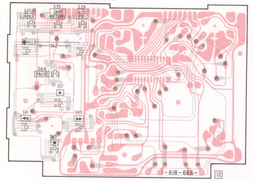

JA-2 BOARD (CONDUCTOR SIDE)

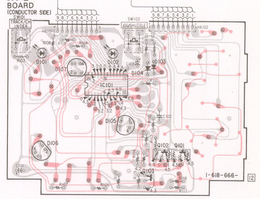

Note:

- ○— : indicates a lead wire mounted on the component side.
- ●— : indicates a lead wire mounted on the conductor side.
- ⊗ : Through hole.
- : Pattern from the side which enables seeing.
- : Pattern of the rear side.
- : Carbon pattern.

Caution:
Pattern face side: Parts on the pattern face side seen from (Conductor Side) the pattern face are indicated.
Parts face side: Parts on the parts face side seen from (Component Side) the parts face are indicated.

● SEMICONDUCTORS

M50461-039FP

2SA1048-GR
2SA1115
DTA144ES

2SC2673

GP2509

SLR932A

μPD7556G-506

2SA1175

1SS119
1SS133
1SS148

SLP144B

6. SCHEMATIC DIAGRAM

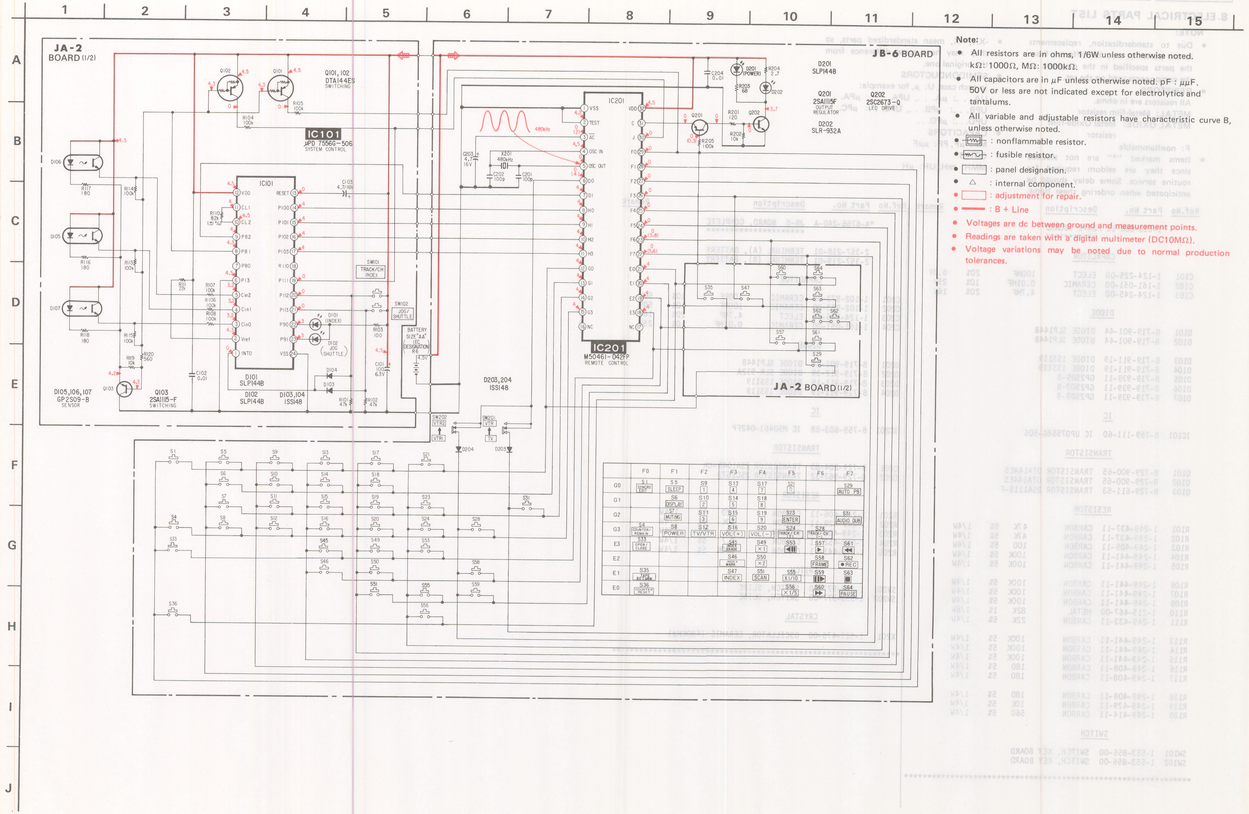

Note:

- All resistors are in ohms, 1/6W unless otherwise noted. kΩ: 1000Ω, MΩ: 1000kΩ.
- All capacitors are in μF unless otherwise noted. pF : μμF. 50V or less are not indicated except for electrolytics and tantalums.
- All variable and adjustable resistors have characteristic curve B, unless otherwise noted.
- : nonflammable resistor.
- : fusible resistor.
- : panel designation.
- △ : internal component.
- : adjustment for repair.
- : B + Line
- Voltages are dc between ground and measurement points.
- Readings are taken with a digital multimeter (DC10MΩ).
- Voltage variations may be noted due to normal production tolerances.

7. EXPLODED VIEW

NOTE:

- The mechanical parts with no reference number in the exploded views are not supplied.
- The construction parts of an assembled part are indicated with a collation number in the remark column.
- Items marked "*" are not stocked since they are seldom required for routine service. Some delay should be anticipated when ordering these items.
- -XX, -X mean standardized parts, so they may have some differences from the original one.

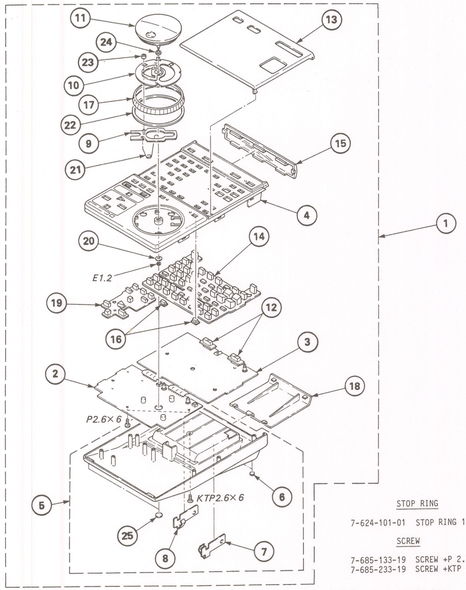

STOP RING

7-624-101-01 STOP RING 1.2 (E TYPE)

SCREW

7-685-133-19 SCREW +P 2.6X6 TYPE1
7-685-233-19 SCREW +KTP 2.6X6 TYPE2NON-SLIT

No.	Part No.	Description	Remark
1	A-6767-422-A	COMMANDER ASSY (RMT-424)	2-25
2	*1-618-666-11	JA-2 BOARD	
3	*A-6766-240-A	JB-6 BOARD, COMPLETE	
4	X-2357-253-2	CASE ASSY, UPPER	
5	X-2357-215-1	CASE ASSY, LOWER	6-8, 25
6	4-374-469-01	FOOT, RUBBER	
7	2-383-106-00	TERMINAL (D), BATTERY	
8	4-350-925-00	TERMINAL (C), BATTERY	
9	X-3691-605-1	PLATE ASSY, SLIDE	
10	X-3691-615-1	PLATE ASSY, DIAL, SHUTTLE	
11	X-3691-672-1	DIAL (R) (N) ASSY, JOG	
12	2-357-217-01	KNOB, SLIDE	
13	2-357-221-51	LID, UPPER	
14	2-357-222-01	RUBBER (B), CONTACT	
15	2-357-223-01	PANEL, FRONT	
16	2-357-224-01	BUTTON	
17	2-357-225-01	DIAL, SHUTTLE	
18	2-357-227-01	COVER, BATTERY	
19	2-357-290-01	RUBBER, CONTACT	
20	3-320-412-01	WASHER (1.4), SPECIAL	
21	3-691-634-01	SPRING, TORSION	
22	3-691-635-01	SPACER, SHUTTLE	
23	3-691-648-01	ROLLER	
24	3-701-439-21	WASHER	
25	2-270-305-00	FOOT, RUBBER	

JA-2 JB-6

8. ELECTRICAL PARTS LIST

NOTE:

- Due to standardization, replacements in the parts list may be different from the parts specified in the diagrams or the components used on the set.
- RESISTORS
  All resistors are in ohms.
  METAL: Metal-film resistor
  METAL OXIDE: Metal Oxide-film resistor
  F: nonflammable
- Items marked "*" are not stocked since they are seldom required for routine service. Some delay should be anticipated when ordering these items.
- -XX, -X, mean standardized parts, so they may have some difference from the original one.
- SEMIDONDUCTORS
  In each case, U: μ, for example:
  UA. . .: μA. . ., UPA. . .: μPA. . .,
  UPB. . .: μPB. . ., UPC. . .: μPC. . .,
  UPD. . .: μPD. . .
- CAPACITORS
  MF: μF, PF: μμF
- COILS
  MMH: mH, UH: μH

Ref.No	Part No.	Description				Remark
	*1-618-666-11	JA-2 BOARD				
		**********				
		CAPACITOR				
C101	1-124-225-00	ELECT	100MF	20%	6.3V	
C102	1-161-051-00	CERAMIC	0.01MF	10%	25V	
C103	1-124-245-00	ELECT	4.7MF	20%	16V	
		DIODE				
D101	8-719-901-44	DIODE SLP144B				
D102	8-719-901-44	DIODE SLP144B				
D103	8-719-911-19	DIODE 1SS119				
D104	8-719-911-19	DIODE 1SS119				
D105	8-719-939-11	GP2S09-B				
D106	8-719-939-11	GP2S09-B				
D107	8-719-939-11	GP2S09-B				
		IC				
IC101	8-759-111-60	IC UPD7556G-506				
		TRANSISTOR				
Q101	8-729-900-65	TRANSISTOR DTA144ES				
Q102	8-729-900-65	TRANSISTOR DTA144ES				
Q103	8-729-611-53	TRANSISTOR 2SA1115-F				
		RESISTOR				
R101	1-249-437-11	CARBON	47K	5%	1/4W	
R102	1-249-437-11	CARBON	47K	5%	1/4W	
R103	1-249-405-11	CARBON	100	5%	1/4W	
R104	1-249-441-11	CARBON	100K	5%	1/4W	
R105	1-249-441-11	CARBON	100K	5%	1/4W	
R106	1-249-441-11	CARBON	100K	5%	1/4W	
R107	1-249-441-11	CARBON	100K	5%	1/4W	
R108	1-249-441-11	CARBON	100K	5%	1/4W	
R110	1-215-467-00	METAL	82K	1%	1/6W	
R111	1-249-433-11	CARBON	22K	5%	1/4W	
R113	1-249-441-11	CARBON	100K	5%	1/4W	
R114	1-249-441-11	CARBON	100K	5%	1/4W	
R115	1-249-441-11	CARBON	100K	5%	1/4W	
R116	1-249-408-11	CARBON	180	5%	1/4W	
R117	1-249-408-11	CARBON	180	5%	1/4W	
R118	1-249-408-11	CARBON	180	5%	1/4W	
R119	1-249-429-11	CARBON	10K	5%	1/4W	
R120	1-249-414-11	CARBON	560	5%	1/4W	
		SWITCH				
SW101	1-553-856-00	SWITCH, KEY BOARD				
SW102	1-553-856-00	SWITCH, KEY BOARD				
		**********				

Ref.No	Part No.	Description				Remark
	*A-6766-240-A	JB-6 BOARD, COMPLETE				
		**********				
	2-357-218-01	TERMINAL (A), BATTERY				
	2-357-219-01	TERMINAL (B), BATTERY				
		CAPACITOR				
C201	1-102-973-00	CERAMIC	100PF	10%	50V	
C202	1-102-973-00	CERAMIC	100PF	10%	50V	
C203	1-124-245-00	ELECT	4.7MF	20%	16V	
C204	1-161-051-00	CERAMIC	0.01MF	10%	25V	
		DIODE				
D201	8-719-901-44	DIODE SLP144B				
D202	8-719-912-39	DIODE SLR-932A				
D203	8-719-911-19	DIODE 1SS119				
D204	8-719-911-19	DIODE 1SS119				
		IC				
IC201	8-759-603-88	IC M50461-042FP				
		TRANSISTOR				
Q201	8-729-204-83	TRANSISTOR 2SA1048-GR				
Q202	8-729-967-32	TRANSISTOR 2SC2673				
		RESISTOR				
R201	1-249-406-11	CARBON	120	5%	1/4W	
R202	1-249-429-11	CARBON	10K	5%	1/4W	
R203	1-249-403-11	CARBON	68	5%	1/4W	
R204	1-249-452-11	CARBON	2.7	5%	1/4W	
R205	1-249-441-11	CARBON	100K	5%	1/4W	
		SWITCH				
SW201	1-553-977-00	SWITCH, SLIDE				
SW202	1-553-977-00	SWITCH, SLIDE				
		CRYSTAL				
X201	1-527-476-00	OSCILLATOR, CERAMIC (480KHz)				
		**********				

EV-S900
RMT-424

SONY®

EV-S900/ RMT-424

SERVICE MANUAL

Sony Corporation

9-972-759-11

Sony Corporation
Personal Video Group

English
89E0932-1
Printed in Japan
© 1989.5
Published by A/V Engineering Service Dept.